ManualsPlus.com

DEPARTMENT OF THE ARMY TECHNICAL MANUAL

TM 11-866

This manual supersedes TM 11-866, 31 August 1943; TB 11-866-1, 18 May 1944; and TB 11-866-2, 30 October 1944.

RADIO RECEIVERS

BC-779-A, -B; BC-794-A, -B;
BC-1004-B, -C, -D; AND R-129/U;

POWER SUPPLY UNITS

RA-74-B, -C; RA-84-A, -B; AND RA-94-A;

RADIO SETS

SCR-244-A, -B; SCR-704; and AN/FRR-4

(HAMMARLUND SUPER PRO RECEIVER)

DEPARTMENT OF THE ARMY • FEBRUARY 1948

United States Government Printing Office

Washington: 1948

ManualsPlus.com

DEPARTMENT OF THE ARMY
Washington 25, D. C., 12 February 1948

TM 11-866, Radio Receivers BC-779-A, -B; BC-794-A, -B; BC-1004-B, -C, -D; and R-129/U; Power Supply Units RA-74-B, -C; RA-84-A, -B; and RA-94-A; Radio Sets SCR-244-A, -B; SCR-704; and AN/FRR-4 (Hammarlund Super Pro Receiver), is published for the information and guidance of all concerned.

[AG 300.7 (18 Nov 47)]

BY ORDER OF THE SECRETARY OF THE ARMY:

OMAR N. BRADLEY
Chief of Staff, United States Army

OFFICIAL:
EDWARD F. WITSELL
Major General
The Adjutant General

DISTRIBUTION:

USAF (10); AGF (5); T (5); Base Comd (2); MDW (6); USAF Maj Comd (15); Arm & Sv Bd (1); AGF Bd (ea Sv Test Sec) (1); Tech Sv (2); FC (2); Class III Instls (3); PE (10); Dep 11 (5) except Baltimore & Sacramento (20); USMA (2); Tng Ctr (2); 4th & 5th Ech Maint Shops 11 (2); A (ZI) (20), (Oversea) (5); CHQ (2); Bn 11 (5); T/O-E's, 1-167R (1); 1-452R (1); 1-562R (1); 1-567R (1); 1-1037; 11-7 (2); 11-15 (2); 11-16 (1); 11-47 (1); 11-95 (2); 11-107 (2); 11-127 (2); 11-338 (1); 11-500, (EB), (ED), (EG) (1); 11-587 (2); 11-597 (2).

For explanation of distribution formula, see TM 38-405.

ManualsPlus.com

CONTENTS

		Paragraphs	Page
PART ONE.	**INTRODUCTION.**		
Section I.	Description	1–10	1
II.	Installation	11–14	9
PART TWO.	**OPERATING INSTRUCTIONS.**		
Section III.	Controls and their use	15	13
IV.	Operation	16–19	15
V.	Equipment performance checklist	20–21	15
PART THREE.	**MAINTENANCE INSTRUCTIONS.**		
Section VI.	Preventive maintenance techniques	22–41	19
VII.	Itemized preventive maintenance	42–49	24
VIII.	Lubrication	50–51	27
IX.	Weatherproofing	52–56	28
PART FOUR.	**AUXILIARY EQUIPMENT** (not used).		
PART FIVE.	**REPAIR INSTRUCTIONS.**		
Section X.	Theory of radio receivers	57–69	33
XI.	Theory of power supply units and battery operation	70–72	46
XII.	Trouble Shooting	73–88	47
XIII.	Repairs	89–92	62
XIV.	Alinement and adjustment	93–100	62
APPENDIX I.	**REFERENCES**	.....	69
II.	**IDENTIFICATION TABLE OF REPLACEABLE PARTS**	.....	72
III.	**IMPROVEMENT KIT MC–531**	.....	88
INDEX		.....	93

ManualsPlus.com

ManualsPlus.com

WARNING

HIGH VOLTAGE
is used in the operation
of this equipment.

DEATH ON CONTACT
may result if operating personnel
fail to observe safety precautions.

ManualsPlus.com

SAFETY NOTICE

Be careful when working on the power supply unit with the bottom plate off. The d-c voltages are over 400 volts, and the a-c potentials up to 900 volts. *These voltages are dangerous to life.*

With the dust cover and bottom plate removed from the receiver, voltages up to 250 volts are exposed at several points on top of the chassis, and voltages up to 400 volts are exposed at several points underneath the chassis.

Some service checks must be made inside the set with the high voltage on. When making these checks, always have present another person capable of rendering aid. Keep one hand in your pocket while making high-voltage measurements. This precaution will prevent touching the electrical circuit with more than one part of the body at one time.

Audio-frequency voltages up to 150 volts may be present at the 600-ohm SPKR terminals under certain conditions. Turn the AUDIO GAIN control to 0 before touching these terminals. Never remove the sheet metal covers from the connector cable terminal strips without first detaching the plug from the a-c power line (or disconnecting the batteries, if used); *turning the OFF-ON switch to OFF is not enough.*

ManualsPlus.com

DESTRUCTION NOTICE

WHY — To prevent the enemy from using or salvaging this equipment.

WHEN — When ordered by your commander.

HOW —
1. Smash—Use sledges, axes, handaxes, pickaxes, hammers, crowbars, heavy tools.
2. Cut—Use axes, handaxes, machetes.
3. Burn—Use gasoline, kerosene, oil, flame throwers, incendiary grenades.
4. Explosives—Use firearms, grenades, TNT.
5. Disposal—Bury in slit trenches, fox holes, other holes. Throw in streams. Scatter.

USE ANYTHING IMMEDIATELY AVAILABLE FOR DESTRUCTION OF THIS EQUIPMENT

WHAT —
1. Smash—Meter, crystal, controls, tubes, coils, switches, capacitors, headset.
2. Cut—Cords, headsets, wiring.
3. Burn—Cords, technical manuals, resistors, capacitors, coils, wiring.
4. Bend—Panels, cabinet, chassis.
5. Bury or scatter—All the above pieces after destroying.

DESTROY EVERYTHING

ManualsPlus.com

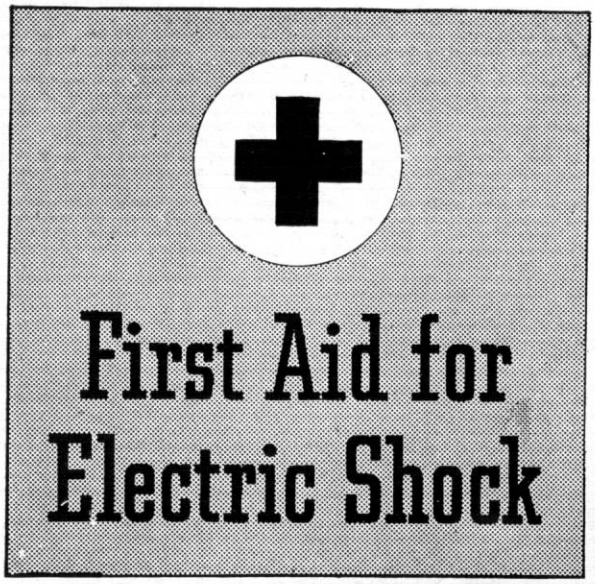

First Aid for Electric Shock

RESCUE.

In case of electric shock, shut off the high voltage at once and ground the circuits. If the high voltage cannot be turned off without delay, free the victim from contact with the live conductor as promptly as possible. Avoid direct contact with either the live conductor or the victim's body. Use a dry board, dry clothing, or other nonconductor to free the victim. An ax may be used to cut the high-voltage wire. Use extreme caution to avoid the resulting electric flash.

SYMPTOMS.

a. Breathing stops abruptly in electric shock if the current passes through the breathing center at the base of the brain. If the shock has not been too severe, the breath center recovers after a while and normal breathing is resumed, provided that a sufficient supply of air has been furnished meanwhile by artificial respiration.

b. The victim is usually very white or blue. The pulse is very weak or entirely absent and unconsciousness is complete. Burns are usually present. The victim's body may become rigid or stiff in a very few minutes. This condition is due to the action of electricity and is not to be considered rigor mortis. Artificial respiration must still be given, as several such cases are reported to have recovered. The ordinary and general tests for death should never be accepted.

TREATMENT.

a. Start artificial respiration immediately. At the same time send for a medical officer, if assistance is available. Do not leave the victim unattended. Perform artificial respiration at the scene of the accident, unless the victim's or operator's life is endangered from such action. *In this case only*, remove the victim to another location, but no farther than is necessary for safety. If the new location is more than a few feet away, artificial respiration should be given while the victim is being moved. If the method of transportation prohibits the use of the Shaeffer prone pressure method, other methods of resuscitation may be used. Pressure may be exerted on the front of the victim's diaphragm, or the direct mouth-to-mouth method may be used. Artificial respiration, once started, must be continued, without loss of rhythm.

b. Lay the victim in a prone position, one arm extended directly overhead, and the other arm bent at the elbow so that the back of the hand supports the head. The face should be turned away from the bent elbow so that the nose and mouth are free for breathing.

c. Open the victim's mouth and remove any foreign bodies, such as false teeth, chewing gum, or tobacco. The mouth should remain open, with the tongue extended. Do not permit the victim to draw his tongue back into his mouth or throat.

d. If an assistant is available during resuscitation, he should loosen any tight clothing to permit free circulation of blood and to prevent restriction of breathing. He should see that the victim is kept warm, by applying blankets or other covering, or by applying hot rocks or bricks wrapped in cloth or paper to prevent injury to the victim. The assistant should also be ever watchful to see that the victim does not swallow his tongue. He should continually wipe from the victim's mouth any frothy mucus or saliva that may collect and interfere with respiration.

e. The resuscitating operator should straddle the victim's thighs, or one leg, in such manner that:

(*1*) the operator's arms and thighs will be vertical while applying pressure on the small of the victim's back;

(*2*) the operator's fingers are in a natural position on the victim's back with the little finger lying on the last rib;

(*3*) the heels of the hands rest on either side of the spine as far apart as convenient without allowing the hands to slip off the victim;

(*4*) the operator's elbows are straight and locked.

f. The resuscitation procedure is as follows:

(*1*) Exert downward pressure, not exceeding 60 pounds, for 1 second.

(*2*) Swing back, suddenly releasing pressure, and sit on the heels.

(*3*) After 2 seconds rest, swing forward again, positioning the hands exactly as before, and apply pressure for another second.

g. The forward swing, positioning of the hands, and the downward pressure should be accomplished in one continuous motion, which requires 1 second. The release and backward swing require 1 second. The addition of the 2-second rest makes a total of 4

TL15338-D

ManualsPlus.com

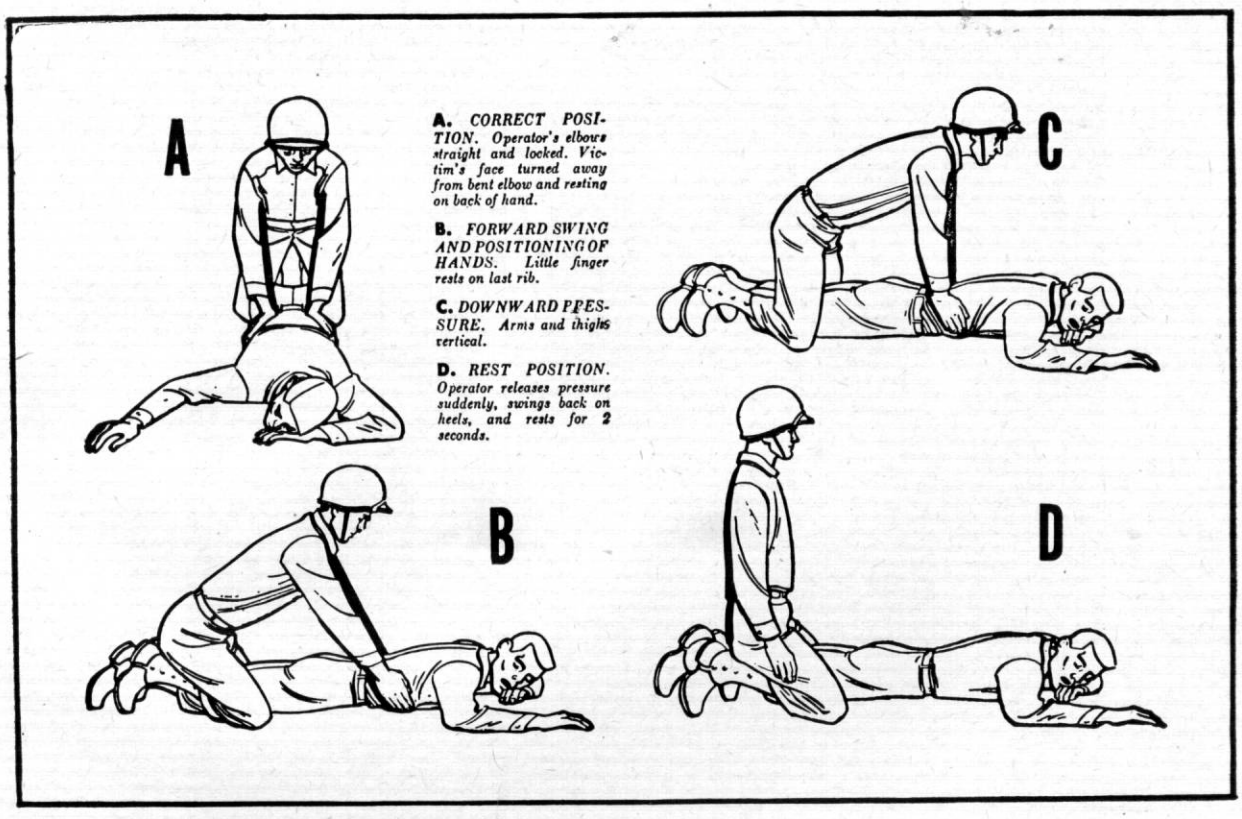

seconds for a complete cycle. Until the operator is thoroughly familiar with the correct cadence of the cycle, he should count the seconds aloud, speaking distinctly and counting evenly in thousands. Example: one thousand and one, one thousand and two, etc.

h. Artificial respiration should be continued until the victim regains normal breathing or is pronounced dead by a medical officer. Since it may be necessary to continue resuscitation for several hours, relief operators should be used if available.

RELIEVING OPERATOR.

The relief operator kneels beside the operator and follows him through several complete cycles. When the relief operator is sure he has the correct rhythm, he places his hands on the operator's hands without applying pressure. This indicates that he is ready to take over. On the backward swing, the operator moves and the relief operator takes his position. The relieved operator follows through several complete cycles to be sure that the new operator has the correct rhythm. He remains alert to take over instantly if the new operator falters or hesitates on the cycle.

STIMULANTS.

a. If an inhalant stimulant is used, such as aromatic spirits of ammonia, the individual administering the stimulant should first test it himself to see how close he can hold the inhalant to his own nostril for comfortable breathing. Be sure that the inhalant is not held any closer to the victim's nostrils, and then for only 1 or 2 seconds every minute.

b. After the victim has regained consciousness, he may be given hot coffee, hot tea, or a glass of water containing ½ teaspoon of aromatic spirits of ammonia. *Do not give any liquids to an unconscious victim.*

CAUTIONS.

a. After the victim revives, keep him LYING QUIETLY. Any injury a person may have received may cause a condition of shock. Shock is present if the victim is pale and has a cold sweat, his pulse is weak and rapid, and his breathing is short and gasping.

b. Keep the victim lying flat on his back, with his head lower than the rest of his body and his hips elevated. Be sure that there is no tight clothing to restrict the free circulation of blood or hinder natural breathing. Keep him warm and quiet.

c. A resuscitated victim must be watched carefully as he may suddenly stop breathing. *Never leave a resuscitated person alone until it is CERTAIN that he is fully conscious and breathing normally.*

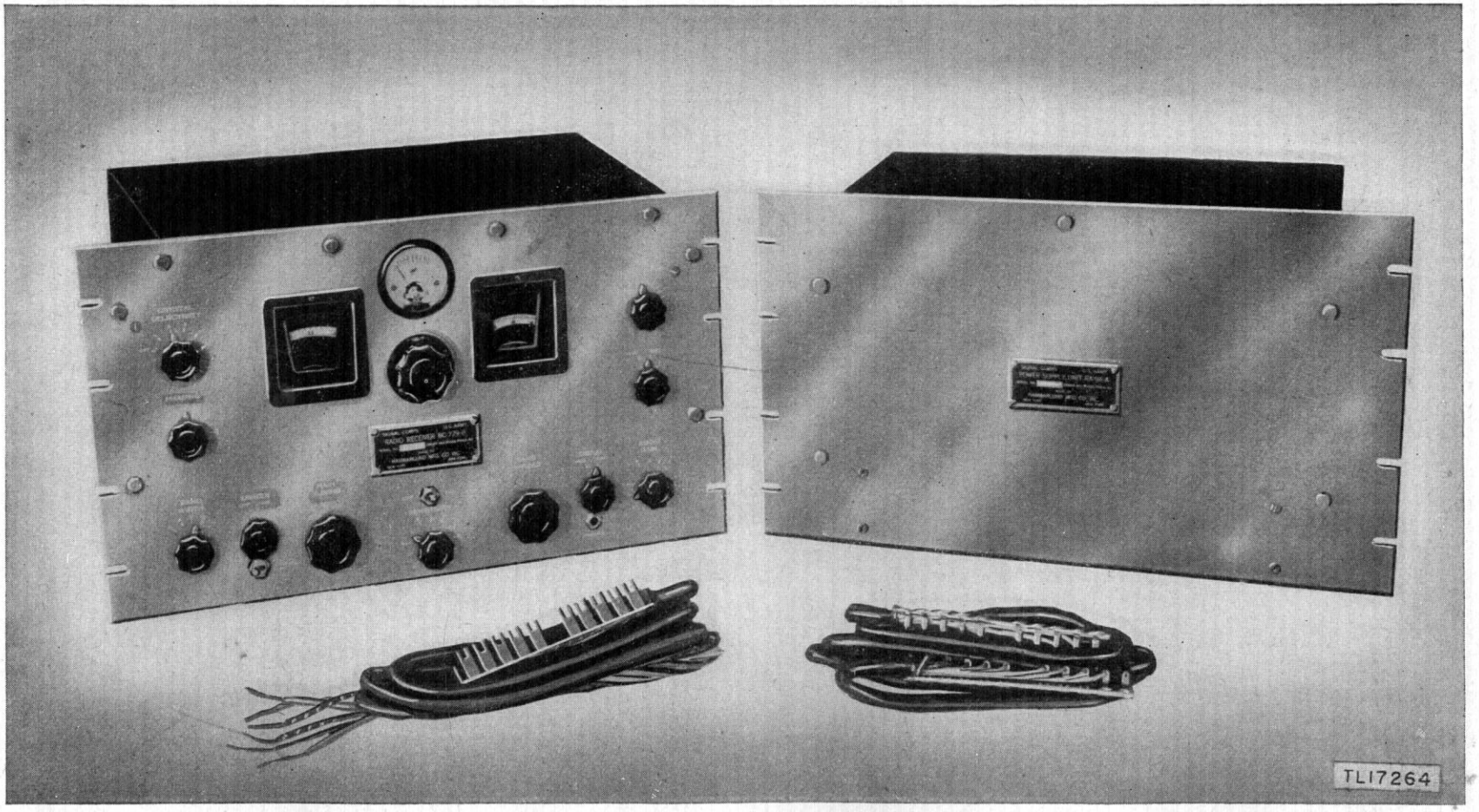

Figure 1. Radio Receiver BC-779-B with associated power supply.

ManualsPlus.com

ManualsPlus.com

This manual supersedes TM 11–866, 31 August 1943; TB 11–866–1, 18 May 1944; and TB 11–866–2, 30 October 1944.

PART ONE

INTRODUCTION

Section I. DESCRIPTION

1. General

a. The radio receivers described in this manual are of the superheterodyne type intended primarily for fixed station use although mountings for vehicular use may be provided. The receivers use a conventional superheterodyne circuit and are designed for the reception of either continuous-wave (c-w), or amplitude-modulated (a-m) voice or tone signals with either manual or automatic volume control (avc).

b. The receivers use an external power supply. Both the receiver and power supply (fig. 1) are designed primarily for rack mounting in standard 19-inch relay racks, but the receiver may be used as a table model by placing it into Cabinet CH–104–A. In an emergency, the receiver can be operated from batteries.

c. The receivers are functionally identical. The basic difference is that each model is designed for a different frequency coverage. Figure 2 shows eight receiver models and their frequency ranges. This figure also shows five power supply units and their input requirements. Each of the power supply units can be used with any receiver.

d. The four Radio Sets SCR–244–A, –B, SCR–704, and AN/FRR–4 are merely different combinations of receivers and power supply units plus additional accessories such as headsets, antenna wires, insulators, etc. Figure 3 shows the radio receiver and power supply unit combinations used in the four radio sets. Note that Radio Set AN/FRR–4 consists only of the receiver and power supply unit. No headphones, antenna wires, or other accessories are included.

e. Official nomenclature followed by (*) is used to indicate all models of the item of equipment covered by this technical manual. Thus Radio Receiver BC–779–(*) represents Radio Receivers BC–779–A and BC–779–B. When the text material is equally applicable to all the receivers described in this manual, the term *receiver* will be used.

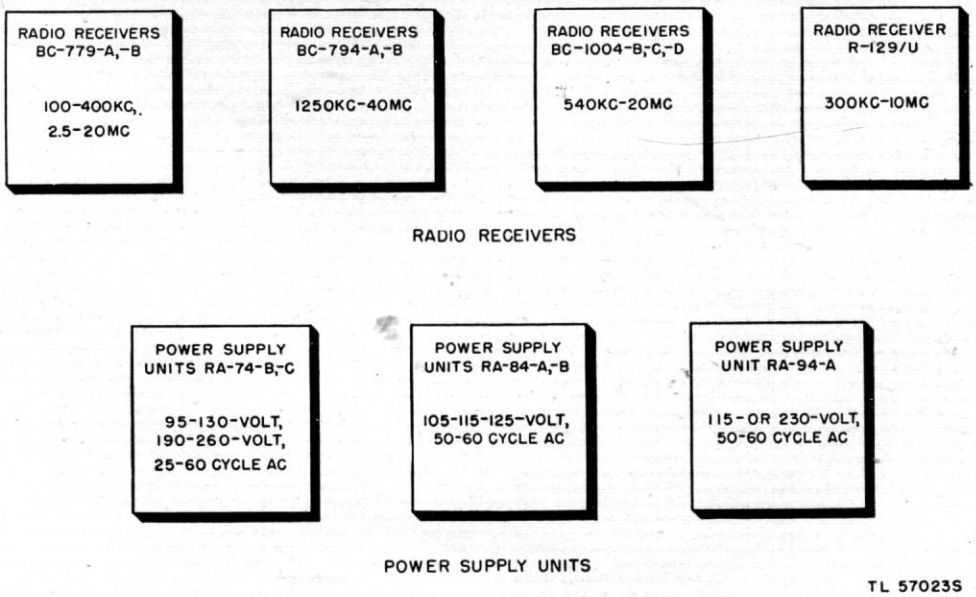

Figure 2. Radio receivers and power supply units, block diagram.

ManualsPlus.com

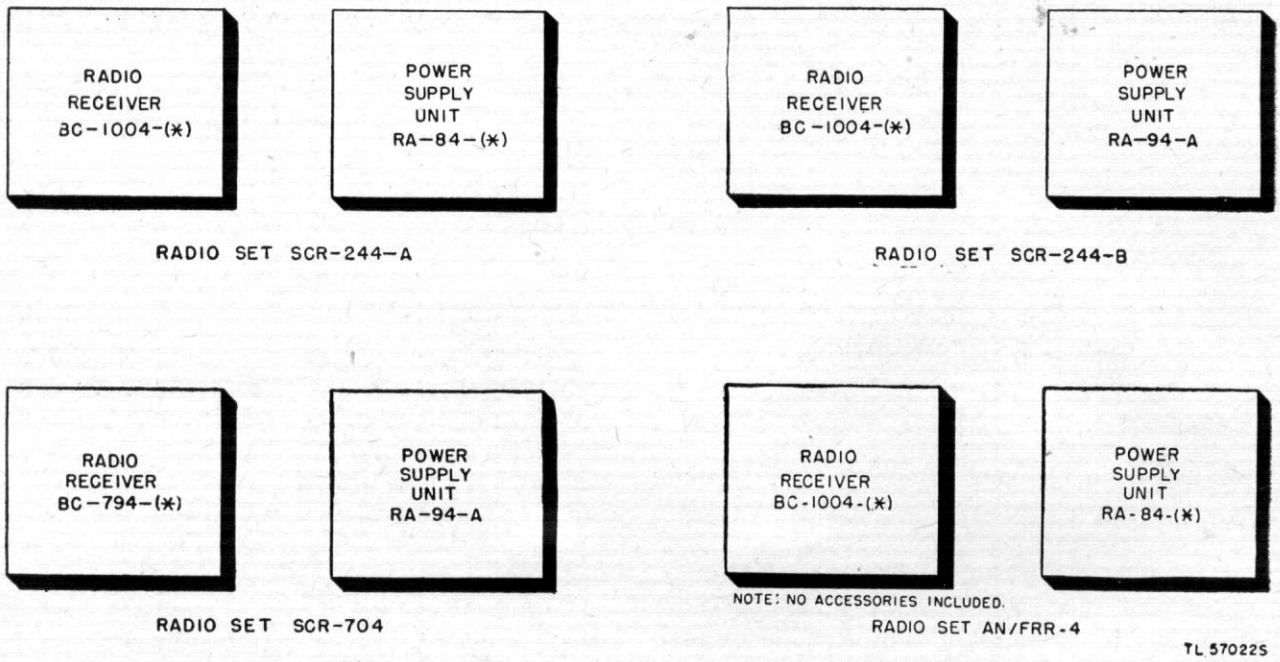

Figure 3. Radio sets, block diagram of main components.

2. Technical Characteristics

Frequency range (in kilocycles (kc) or megacycles (mc)):

Radio Receiver BC–779–(*)... 100–200 kc
200–400 kc
2.5–5 mc
5–10 mc
10–20 mc

Radio Receiver BC–794–(*)...1,250–2,500 kc
2.5–5 mc
5–10 mc
10–20 mc
20–40 mc

Radio Receiver BC–1004–(*).. 540–1,160 kc
1,160–2,500 kc
2.5–5 mc
5–10 mc
10–20 mc

Radio Receiver R–129/U..... 300–540 kc
540–1,160 kc
1,160–2,500 kc
2.5–5 mc
5–10 mc

Receiver type ..... Superheterodyne

Types of signals which can be received .....C-w, tone, and voice

Number of tubes 18

Intermediate frequency .....465 kc

Power input .....180 watts

Power supply:

Power Supply Unit RA–74–(*) 95–130–volt, 190–260-volt, 25–60-cycle alternating current (ac)

Power Supply Unit RA–84–(*) 105–115–125-volt, 50–60-cycle ac

Power Supply Unit RA–94–A..115- or 230-volt, 50–60-cycle ac

Battery supply .....One 6-volt storage battery
Five 45-volt B batteries
One 45-volt C battery

Antenna .....Doublet antenna with balanced transmission line or single wire and ground

ManualsPlus.com

3. Frequency Spectrum Chart

The frequency coverage of the receivers is included in paragraph 2. Signal Corps radio sets which can be monitored by the receivers are graphically indicated in the frequency spectrum chart (fig. 4).

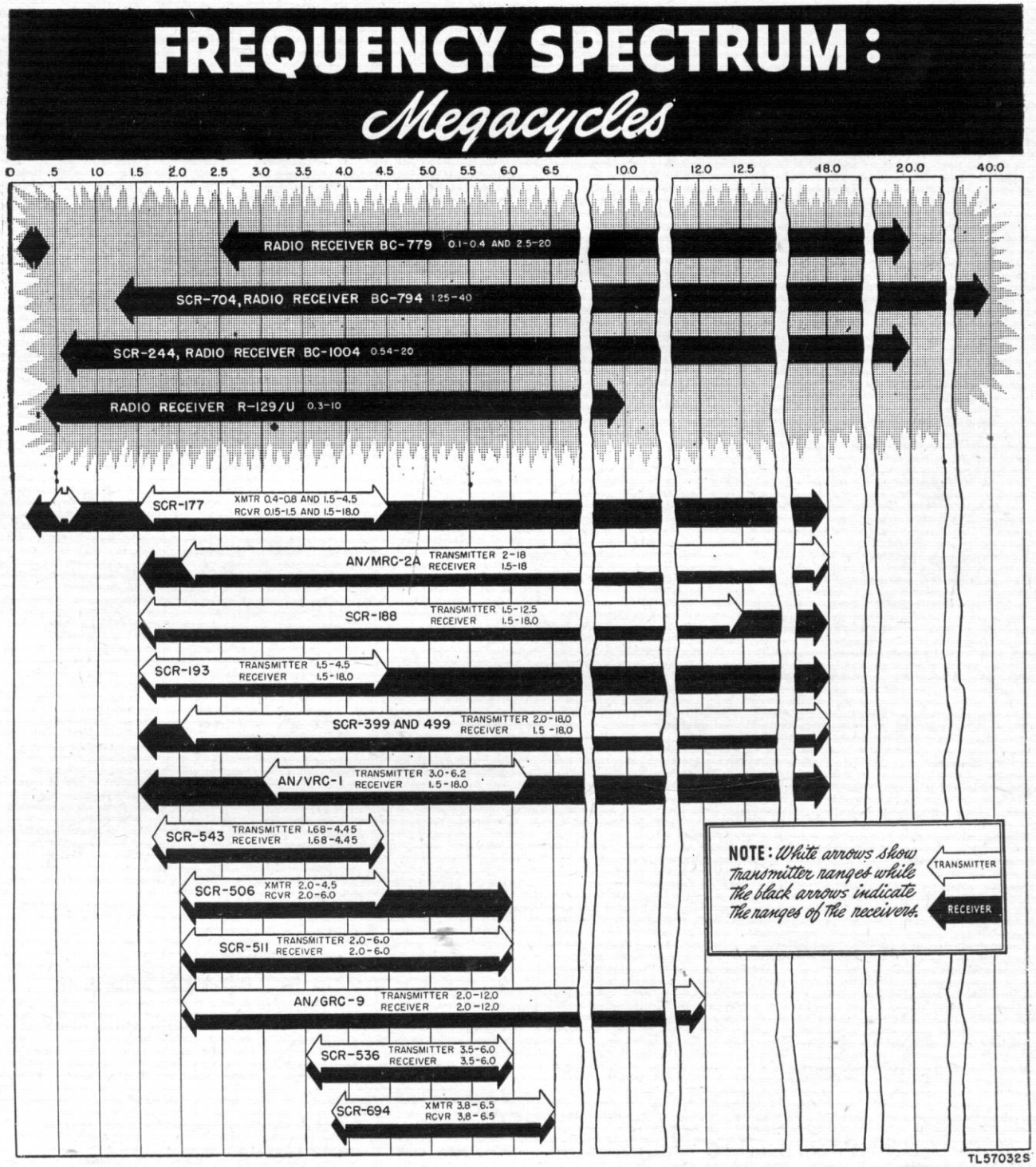

Figure 4. Frequency spectrum chart.

ManualsPlus.com

4. Table of Components

Component	Required quan.	Height (in.)	Depth (in.)	Length (in.)	Volume (cu ft)	Weight (lb)
Radio Receivers BC-779-(*), BC-794-(*), BC-1004-(*), and R-129/U with power and battery cables and dust cover	1	10½	15⅜	19	1.8	55
Radio Receivers BC-779-(*), BC-794-(*), BC-1004-(*), and R-129/U with power and battery cables and Cabinet CH-104-A	1	12¼	16½	23	3.2	73
Power Supply Units RA-74-(*), RA-84-(*), and RA-94-A with dust cover	1	10½	10	19	1.2	60
Radio Set SCR-244-(*), includes:						
Radio Receiver BC-1004-(*)	1	10½	15⅜	19	1.8	55
Cabinet CH-104-A	1	12¼	16½	23	3.2	18
Power Supply Units RA-84-(*) and RA-94-A for Radio Sets SCR-244-A and SCR-244-B, respectively	1	10½	10	19	1.2	60
Headset HS-30	1	.....	.....	.....	0.05	1.7
Cord CD-874	1	.....	.....	.....	0.02	0.5
Wire W-151	150 ft	.....	.....	.....	0.15	3
Wire W-152	150 ft	.....	.....	.....	0.15	3
Rope RP-3	150 ft	.....	.....	.....	0.5	5
Insulator IN-124	1	.....	.....	.....	0.004	0.2
Insulator IN-125	3	.....	.....	.....	0.007	0.2
Radio Set SCR-704: same as Radio Set SCR-244-B except Radio Receiver BC-794-(*) replaces Radio Receiver BC-1004-(*).						
Radio Set SCR-AN/FRR-4:						
Radio Receiver BC-1004-(*) with power and battery cables and dust cover	1	10½	15⅜	19	1.8	55
Power Supply Unit RA-84-(*)	1	10½	10	19	1.2	60

Note. This list is for general information only. See appropriate supply publications for information pertaining to requisitioning of spare parts.

5. Packaging Data for Export Shipment

a. Radio receivers and power supply units are packed in nailed wood shipping containers of the size and quantity listed in table I. Running spare parts, operating parts removed for safe packaging, and accessories are packed in additional nailed wood boxes, the gross weight of each of which does not exceed 150 pounds. The sizes and weights of the main boxes as given in table I may vary from time to time because of minor differences in the packaging material used. Such differences occur because of current material availability and differing supply channels. Table I is computed on the basis of rack models. If table models are packaged instead, receiver dimensions will be slightly greater and power supply dimensions slightly less.

b. Radio receivers are packaged and packed in general as illustrated in figure 5. Power supply units are also packaged and packed as illustrated in figure 5. Both receivers and power supply units may require a partial disassembly in that plug-in units, such as vacuum tubes, unless they lock securely in their sockets, are removed. Particular attention is given to tubes over 4 inches in height. All loose wires, cables, or connections are compacted and secured against their respective units before packaging.

6. Packaging Data for Domestic Shipment

a. Radio receivers and power supply units packed for domestic (other than oversea) shipment may be received in shipping containers similar to those described for export, with the following changes, depending upon the amount of handling anticipated and the length of storage contemplated:

(1) The use of a dehydrating agent, or desic-

ManualsPlus.com

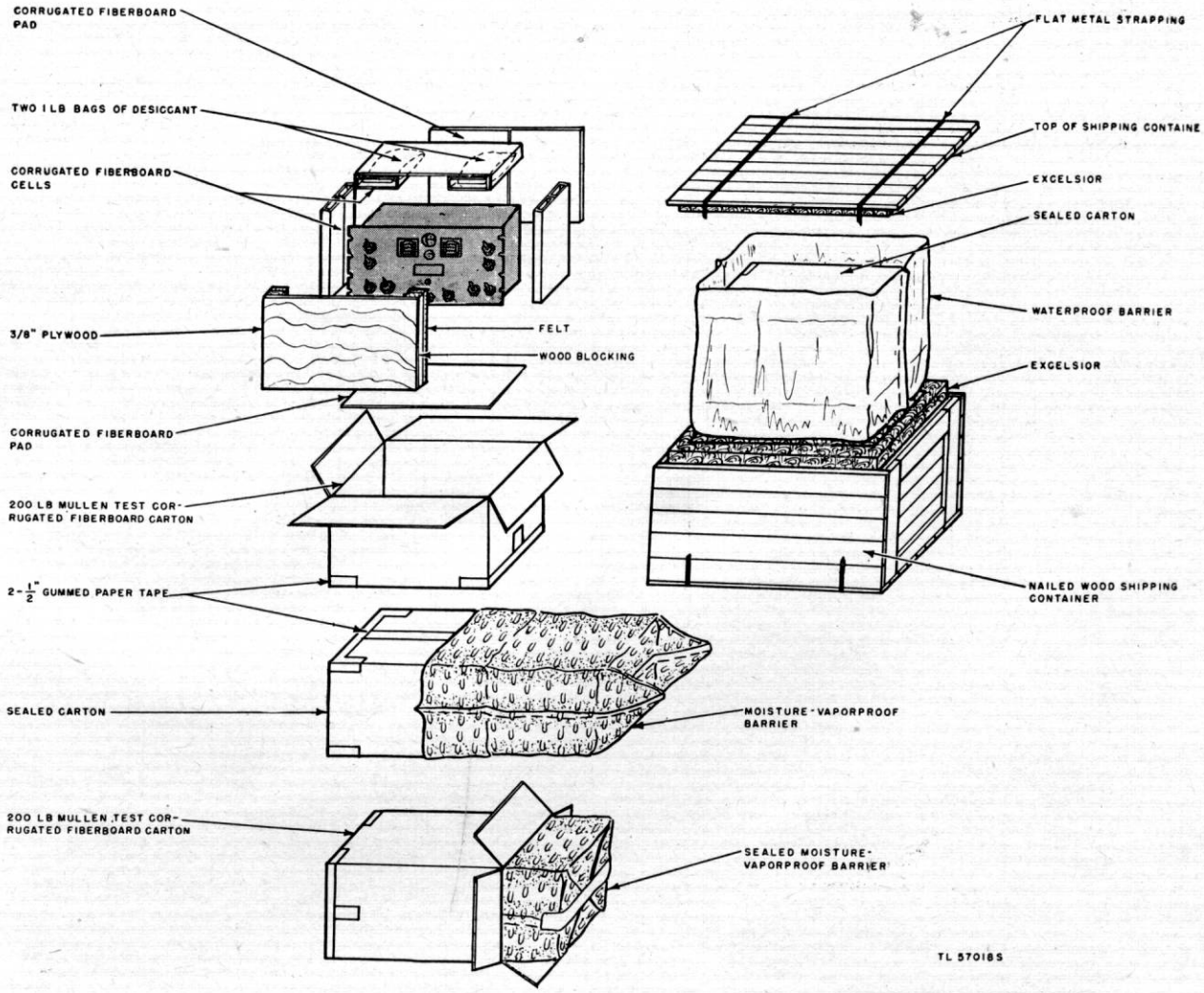

Figure 5. Packaging and packing of radio receivers.

Table I. Packaging data for export shipment

Item	No. of boxes	Outside dimensions (in.)	Volume (cu ft)	Gross weight (lb)
Radio Receiver:				
BC-779-A ...	1	24⅛ x 20½ x 15⅛	4.3	90
BC-779-B	1			
BC-794-A ...	1			
BC-794-B	1			
BC-1004-B ...	1			
BC-1004-C ...	1			
BC-1004-D ..	1			
R-129/U	1			
Power Supply Unit:				
RA-74-B	1	24¼ x 15⅞ x 14⅜	3.2	89
RA-74-C	1	24¼ x 15⅞ x 14⅜	3.2	89
RA-84-A	1	24¼ x 15⅜ x 14⅜	3.1	85
RA-84-B	1	24¼ x 15⅜ x 14⅜	3.1	85
RA-94-A	1	24¼ x 15⅜ x 14⅜	3.1	85
Radio Set:				
SCR-244-A ..	2	24⅛ x 20½ x 15⅛	4.3	90
		24¼ x 15⅜ x 14⅜	3.1	85
SCR-244-B ..	2	24⅛ x 20½ x 15⅛	4.3	90
		24¼ x 15⅜ x 14⅜	3.1	85
SCR-704	2	24⅛ x 20½ x 15⅛	4.3	90
		24¼ x 15⅞ x 14⅜	3.2	89
AN/FRR-4 ..	2	24⅛ x 20½ x 15⅛	4.3	90
		24¼ x 15⅜ x 14⅜	3.1	85

ManualsPlus.com

cant, and moisture-vaporproof barrier may be omitted.

(2) The use of excelsior cushioning and a nailed wood shipping container may be omitted.

b. Table II indicates dimensions and weights of receivers and power supply units as repackaged for short movements by using troops, or for domestic shipment and limited storage, providing minimum physical protection only within a water-resistant fiberboard container.

Table II. Packaging data for domestic shipment

Item	No. of boxes	Outside dimensions (in.)	Volume (cu ft)	Gross weight (lb)
Radio Receiver:				
BC-779-A	1	19¾ x 17¾ x 12¾	2.6	57
BC-779-B	1			
BC-794-A	1			
BC-794-B	1			
BC-1004-B	1			
BC-1004-C	1			
BC-1004-D	1			
R-129/U	1			
Power Supply Unit:				
RA-74-B	1	19⅞ x 11⅝ x 13½	1.8	63
RA-74-C	1	19⅞ x 11⅝ x 13½	1.8	63
RA-84-A	1	19⅞ x 11⅝ x 13	1.7	59
RA-84-B	1	19⅞ x 11⅝ x 13	1.7	59
RA-94-A	1	19⅞ x 11⅝ x 13	1.7	59
Radio Set:				
SCR-244-A	2	19¾ x 17¾ x 12¾	2.6	57
		19⅞ x 11⅝ x 13	1.7	59
SCR-244-B	2	19¾ x 17¾ x 12¾	2.6	57
		19⅞ x 11⅝ x 13	1.7	59
SCR-704	2	19¾ x 17¾ x 12¾	2.6	57
		19⅞ x 11⅝ x 13½	1.8	63
AN/FRR-4	2	19¾ x 17¾ x 12¾	2.6	57
		19⅞ x 11⅝ x 13	1.7	59

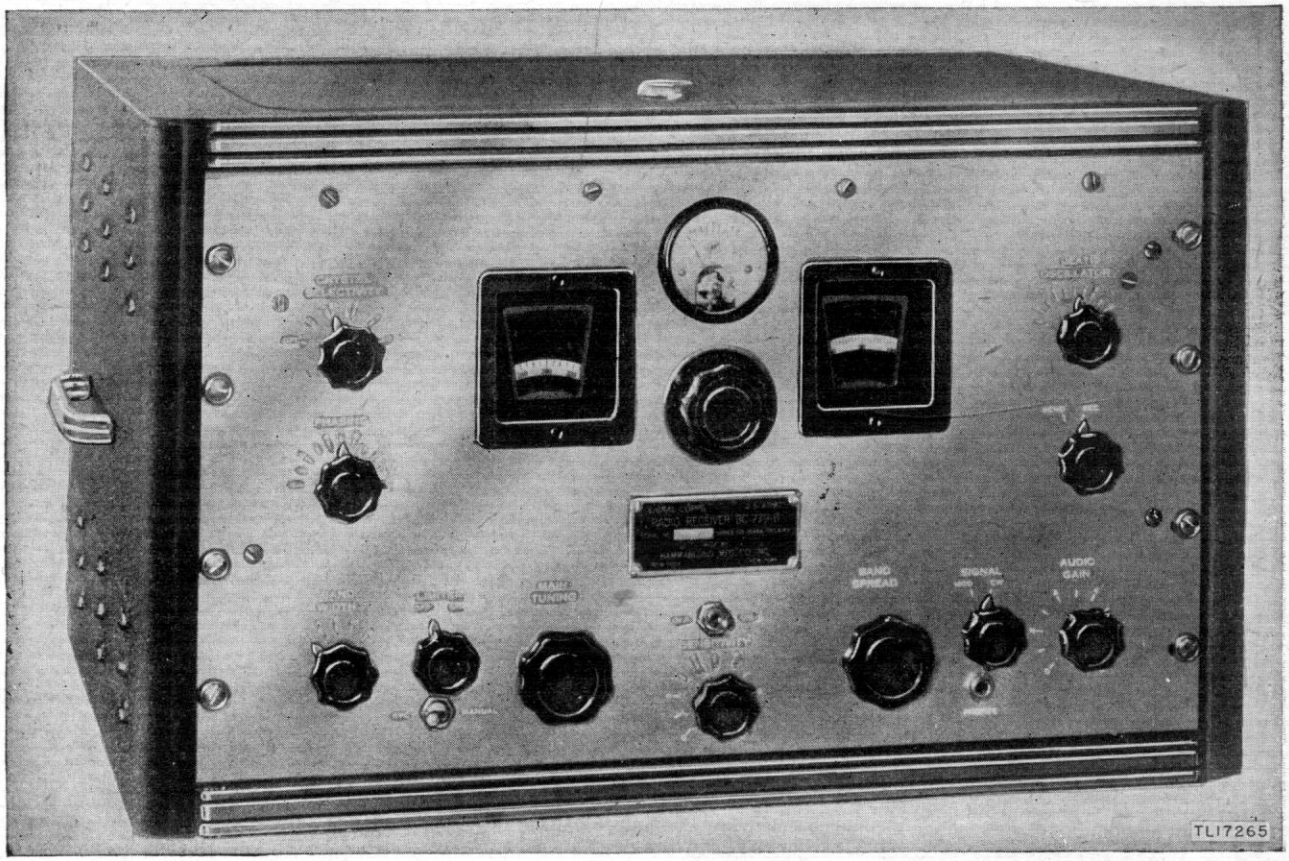

Figure 6. Radio Receiver BC-779-B in Cabinet CH-104-A.

ManualsPlus.com

7. Description of Radio Receiver

The eight receivers described in this manual are similar in outward general appearance. Each receiver consists of a plated or painted steel chassis to which is attached a 19-inch panel with four mounting notches on each side arranged to fit a standard relay rack (fig. 1). The panel is attached to the front of the chassis by spacing studs and heavy diagonal braces extending from the sides of the chassis deck to the upper corners of the panel. The rack mounting model of the receiver is supplied with an over-all shield or dust cover which is secured to the back of the panel and rear skirt of the chassis by spade bolts, thumbnuts, and knurled thumbscrews. For table mounting, the dust cover is removed, and the receiver is placed in Cabinet CH–104–A (fig. 6). The under side of the receiver chassis is equipped with a steel cover plate which has heavy, felt-covered feet in the corners. The rear of the chassis (fig. 10) is provided with a terminal strip which is used in making connection either to the power supply unit or to batteries. The S meter located at the top center of the receiver panel is not supplied with Radio Receiver BC–1004–D.

8. Description of Power Supply Unit

The five power supply units are similar in appearance. Each one is mounted on a steel chassis. Like the receiver, the power supply unit can be used for either rack or table mounting. The rack mounting model is secured to an aluminum panel 19

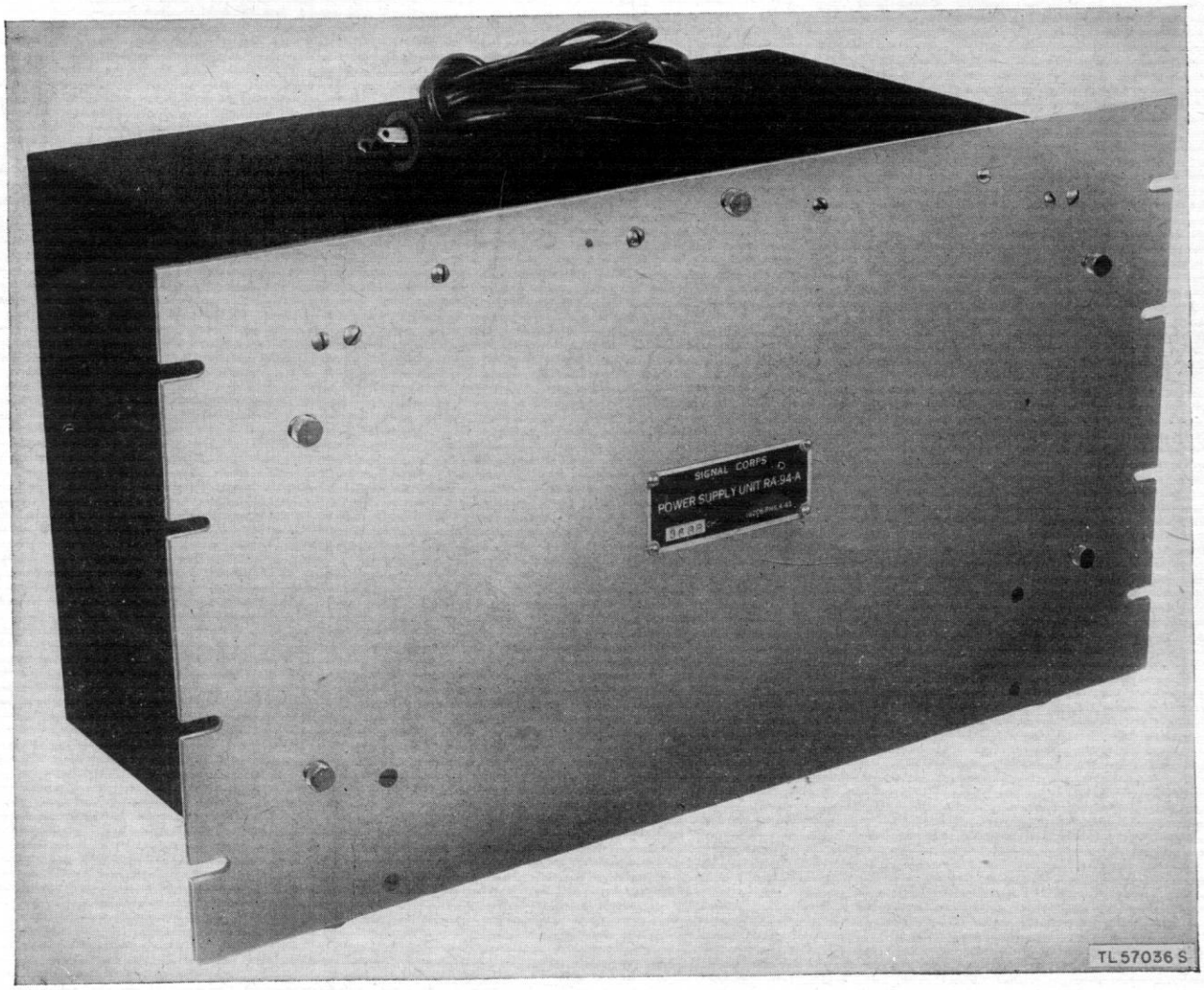

Figure 7. Power Supply Unit RA–94–A.

ManualsPlus.com

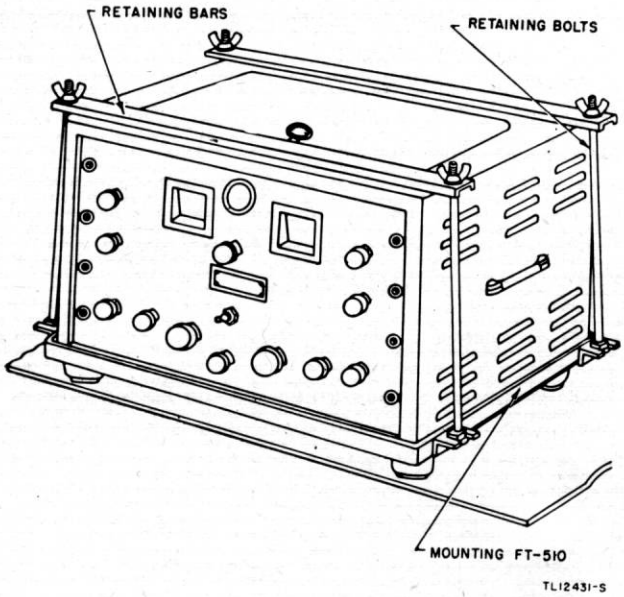

Figure 8. Radio receiver installed on Mounting FT–510.

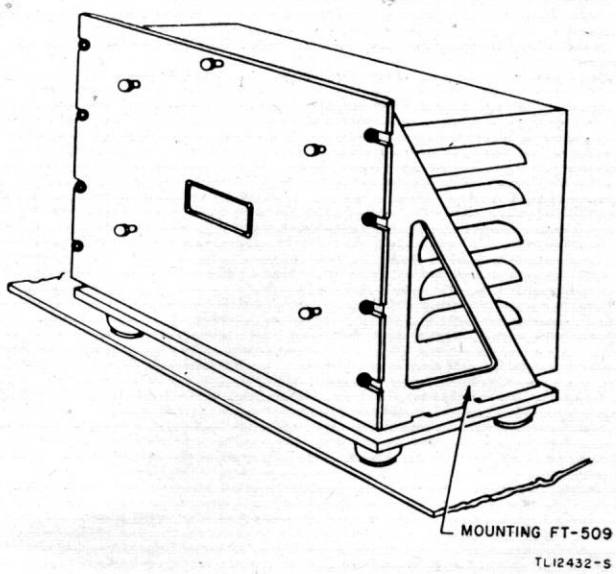

Figure 9. Power supply unit installed on Mounting FT–509.

inches wide by 8¾ inches high with appropriate mounting notches. It has a shield or dust cover secured to the panel and skirt of the chassis by thumbnuts and screws (fig. 7). The under side of the chassis is provided with a steel cover plate which has heavy, felt-covered feet in the corners. The rear of the chassis has a terminal strip which is connected to the terminal strip on the receiver by the power supply connecting cable.

9. Mountings FT–509 and FT–510

Mountings FT–509 and FT–510 are used to shock-mount the radio receiver and power supply unit in vehicular installations to prevent damage caused by shock and vibration. Mounting FT–510 is used with the radio receiver and Mounting FT–509 is used with the power supply unit (figs. 8 and 9).

10. Differences in Models

a. The external appearances of the receiver and power supply units for all models are practically identical except that Radio Receiver BC–1004–D does not contain the S meter. The various models can be rack or table mounted.

b. Radio Receivers BC–779–A and –B are alike, Radio Receivers BC–794–A and –B are alike, and Radio Receivers BC–1004–B and –C are alike with the exception that in the later issues of each model, potted type transformers and chokes with terminal boards are used in place of leads.

c. Radio Receiver BC–1004–C and –D are identical except for the S meter.

d. Radio Receiver R–129/U is exactly the same as Radio Receiver BC–1004–C except for frequency coverage.

e. Radio Receivers BC–779–(*), BC–794–(*), BC–1004–(*), and R–129/U are functionally alike except for the differences in frequency ranges.

Table III. Cross references for commercial and Signal Corps nomenclature

Hammarlund commercial nomenclature*	Equivalent Signal Corps nomenclature
SP–210–LX	BC–779–A
SP–200–LX	BC–779–B
SP–210–SX	BC–794–A
SP–200–SX	BC–794–B
SP–210–X	BC–1004–B
SP–200–X	BC–1004–C and –D
None	R–129/U

*When an R appears in commercial nomenclature, such as in SPR, it indicates that the equipment is a rack model rather than a table model. For the purposes of this manual, all SP and SPR models can be considered identical.

f. Many models of Hammarlund Commercial Super Pro Receivers were put into field use prior to the assignment of Signal Corps nomenclature to such receivers. The text of this manual is also applicable to some of these super pro receivers,

ManualsPlus.com

namely, the SP–200 and SP–210 series. Table III indicates the relationship between super pro and Signal Corps nomenclature for all receivers to which this manual is applicable. The super pro receivers of the SP–10 and SP–110 series use different electrical components and circuits and have characteristics different from receivers listed in table III and, therefore, are not covered by this manual.

Section II. INSTALLATION

11. Siting

The receivers must be correctly situated to be sure of good performance. In many instances, particularly where the receiver is part of a larger set, the necessary tactical and technical requirements for proper operation of the system as a whole will determine the receiver location. In any case, remember the following points:

a. The antenna should be high, and clear of surrounding objects.

b. The receiver should be situated away from power lines, generators, and power units, or other unshielded electrical equipment.

c. Hills and other high places are better for radio reception. Avoid dips, valleys, hollows, and other depressions.

d. Trees and other dense foliage decrease radio reception.

e. Choose an operating position which will have as even a temperature and as little humidity as possible.

12. Unpacking

Caution: Radio receivers and power supply units may be easily damaged during unpacking. Cut metal straps, remove top, sides, etc., of the cases carefully and according to the instructions given below. Avoid thrusting crowbars or other tools deeply into the interior of any shipping container. Unpacking should be done in a place where the equipment is not exposed to dust, dirt, or excessive moisture.

a. Unpacking Oversea Shipping Containers. During unpacking do not damage the packaging material any more than necessary. Store the inside packaging materials in their respective shipping containers for re-use, with the exception of the bags of desiccant, or dehydrating agent, which will either be destroyed or placed aside for reactivation. Cut metal straps with a suitable cutting device or twist with pliers until the straps crystallize and break. Remove nails with a nail puller. Prying may damage the equipment. The following subparagraphs describe details of packaging encountered as the containers are unpacked:

(1) *Radio receivers.* (*a*) Cut metal straps.

(*b*) Remove nails with nail puller and remove top of shipping container.

(*c*) Remove excelsior from top of packaged receiver.

(*d*) Lift out packaged receiver.

(*e*) Slit waterproof overwrap at seams and remove from package.

(*f*) Slit seal of outer carton and lift out moisture-vaporproofed package.

(*g*) Slit seam of moisture-vaporproof barrier and lift out inner carton.

(*h*) Slit seal of inner carton and open flaps.

(*i*) Lift out desiccant and blocking of plywood, wood blocks, and corrugated fiberboard cells and pads.

(*j*) Lift out receiver and remove dust cover.

(*k*) Remove all interior blocking and bracing. Unfasten all cables, wires, and connections where secured against receiver for packaging.

(2) *Power supply units.* The unpacking of power supply units is similar to the procedure outlined above for receivers.

b. Unpacking Domestic Shipping Containers. Exercise the same caution in unpacking domestic shipping containers as required above for unpacking oversea shipping containers.

c. Checking Equipment. After removal, examine the equipment carefully for damage that may have occurred during shipment. Compare the packing slip with the unpacked equipment.

13. Connections and Interconnections

a. Connections to Power Supply Unit. Connect the receiver to the power supply unit as follows:

(1) Remove the sheet metal covers from the terminal strip E4 on the rear of the receiver and from the terminal strip E1 on the power supply unit.

(2) Make sure that all 10 screws on each strip are unscrewed at least three turns.

(3) Attach one end of the connector cable to each terminal *exactly* as shown in figure 10 and

ManualsPlus.com

securely tighten all the screws. Make certain that each slotted spade lug on the cable strips makes contact with its respective screw terminal *only,* since a lug jammed between two of the screws could cause trouble. The spacing of the spade lugs on the cable terminal strips is exactly the same as the spacing of the screws in the terminal strips on the receiver and power unit. If the two do not go together easily, do not use force. Make sure that all the screws are loosened enough. If one of the spade lugs has been bent or pushed out of place, straighten it and try again. The spade lugs slip under the screw heads from the top.

(4) Replace both metal covers immediately and do not remove them while the power supply unit is connected to the a-c power line.

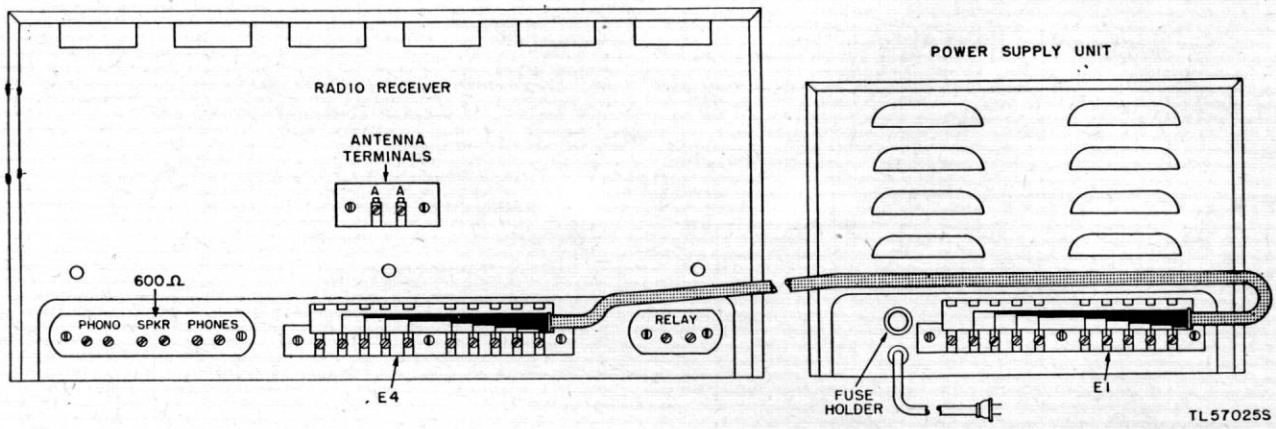

Figure 10. Cable connections for a-c operation.

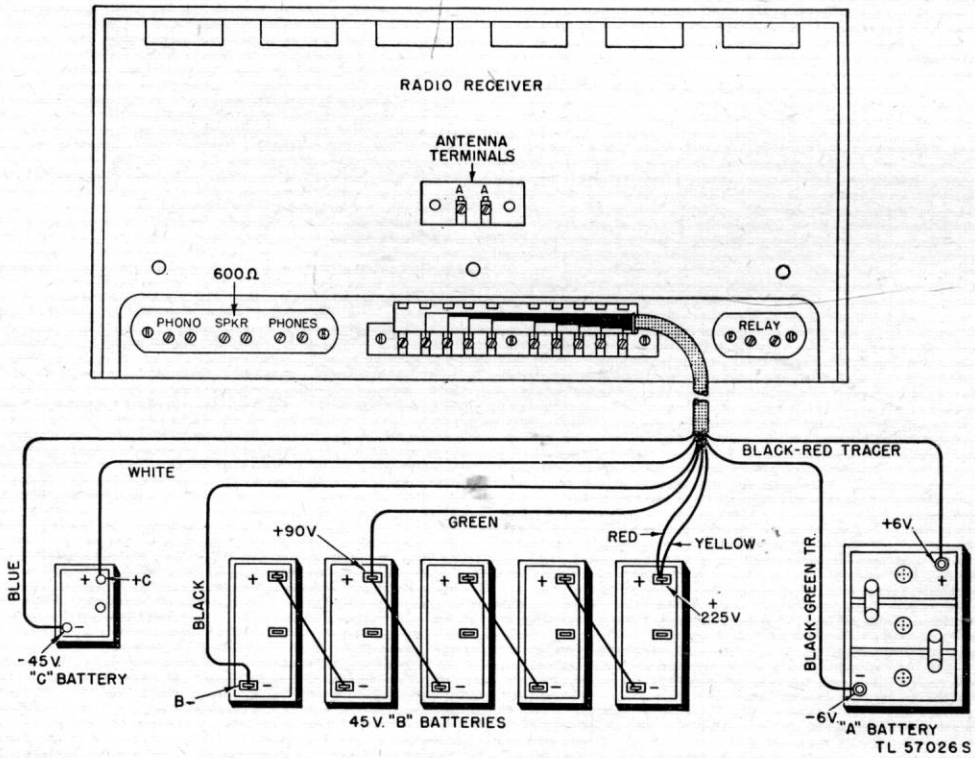

Figure 11. Cable connections for battery operation.

ManualsPlus.com

b. Connection for Battery Operation. The cable used for battery connection is the one with only one terminal strip. The other end of the cable is made up of eight loose wires.

(1) Connect the battery cable to the receiver *first* and then replace the terminal cover before connecting the cable to the batteries.

(2) Connect the eight loose wires to the batteries according to the color code shown in figure 11.

(3) When discontinuing battery operation, disconnect the loose ends of the cable from the batteries *before* detaching the cable from the receiver.

c. Antenna. The antenna terminals can be coupled to a doublet antenna by a balanced transmission line of about 115 ohms' impedance or to a single wire antenna and ground. There is an electrostatic screen between the primary and secondary of each antenna input transformer. This screening, plus a two-wire balanced lead-in, cuts noise pick-up to a minimum.

(1) *Transmission line lead-in.* Connect the feeders to the terminals marked AA at the rear of the receiver.

(2) *Single wire antenna.* If this is used, connect its lead-in to one of the A terminals. Connect a good ground to the other A terminal.

Note. Unusually good reception can be obtained when receiving over a narrow band of high frequencies if a suitably designed doublet or similar tuned antenna is connected to the receiver through a good lead-in, twisted or spaced pair, or coaxial cable.

(3) *Ground.* It is not necessary to ground the receiver chassis but it can be done by connecting a wire under one of the thumbscrews that hold the dust cover to the rear of the chassis.

d. Earphones. Insert the plug of Headset HS–30 (or any other available headphone) into the PHONES jack (fig. 15), or connect it to the screw terminals marked PHONES on the rear of the chassis (fig. 10). No matching transformer is necessary.

e. A-C Input. Before plugging the power cord into the a-c power line, remove the bottom plate from the power supply unit to see that the primary tap is properly connected for the particular a-c voltage available. This primary tap connects the fuse holder to one of the screw terminals on the power transformer, and is marked PRIMARY TAP in figure 12. Connect the primary tap to the screw terminal most closely agreeing with the available a-c line voltage and replace the bottom cover plate.

(1) Power Supply Unit RA–74–(*) has eight

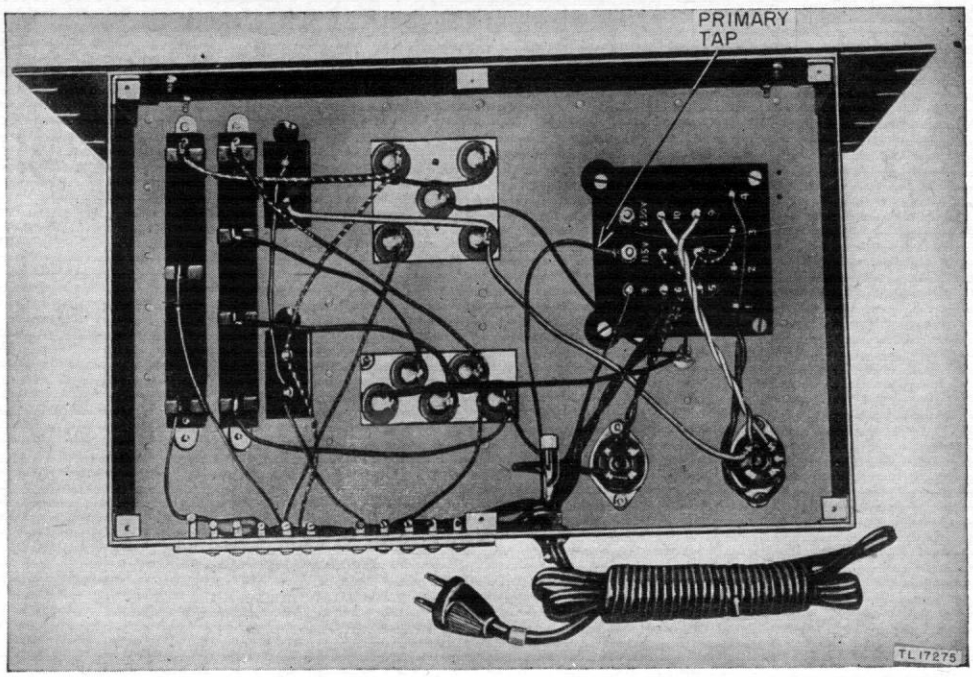

Figure 12. Bottom view of power supply unit, showing primary tap connection.

ManualsPlus.com

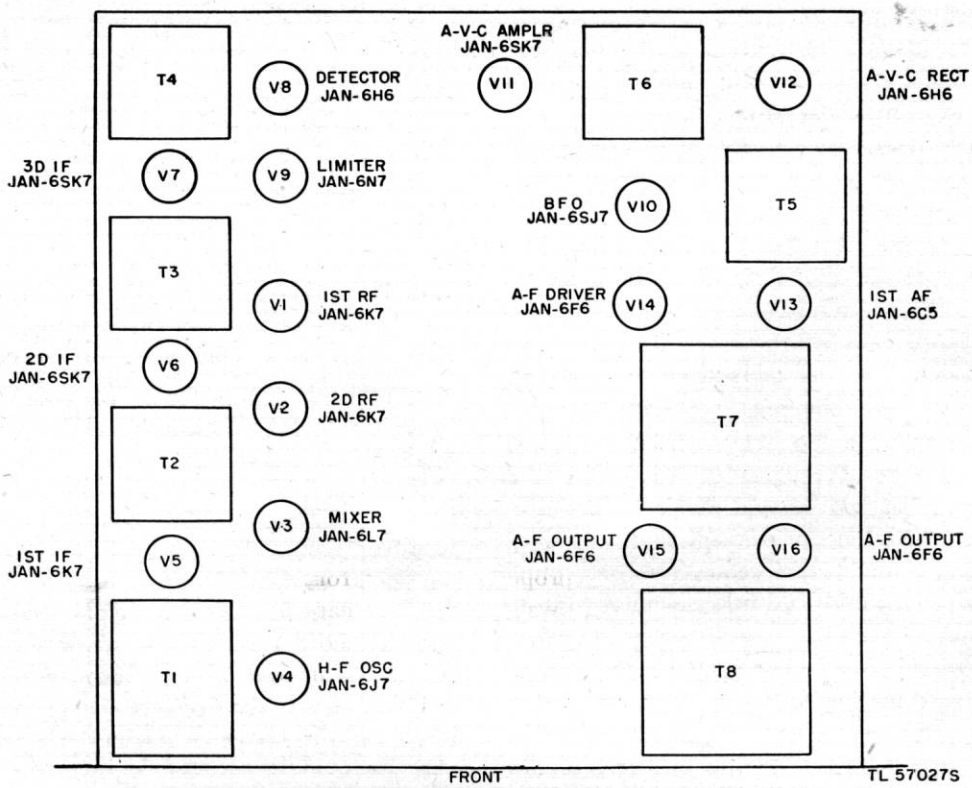

Figure 13. Radio receiver, tube location.

taps marked 95, 105, 117, 130, 190, 210, 234, and 260.

(2) Power Supply Unit RA–84–(*) has three taps marked 105, 115, and 125.

(3) Power Supply Unit RA–94–A has two taps marked 115 and 230.

f. Power Cord. Turn the power OFF-ON switch on the receiver front panel to OFF and plug the power cord into the a-c power line.

14. Preparation for Use

a. Tubes. Check to see that the tubes are in the proper sockets before turning on the receiver.

(1) *Receiver.* To inspect the receiver tubes, remove the dust cover by removing the thumbnuts which hold the cover to the front panel and rear edge of the chassis. A receiver tube location diagram is shown in figure 13. Their proper location, as well as the marking of their respective sockets, is clearly shown also in the etched location plates attached to the top of the tuning unit. All of the receivers use the same set of tubes.

(2) *Power supply unit.* Take the dust cover off the power supply unit and remove the cardboard jackets from the two rectifier tubes. Figure 14 shows the location of these tubes.

b. Adjustments. The equipment is already adjusted when received. No further adjustments are necessary.

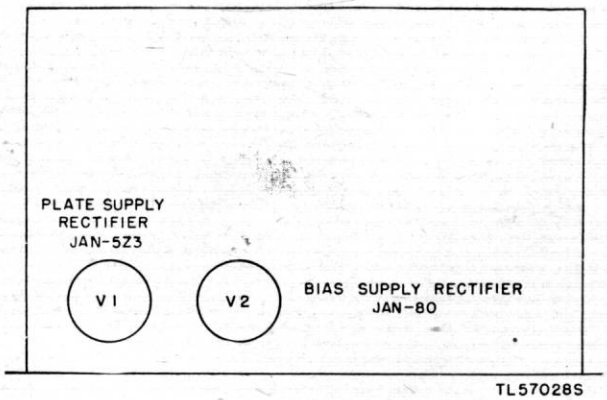

Figure 14. Power supply unit, tube location.

ManualsPlus.com

PART TWO

OPERATING INSTRUCTIONS

Note. For information on destroying the equipment to prevent enemy use, refer to the destruction notice at the front of the manual.

Section III. CONTROLS AND THEIR USE

15. Receiver Controls (fig. 15)

a. BAND SWITCH. The 5-position band switch selects the proper coils and capacitors in the radio-frequency (r-f) stages to tune the desired frequency range. In addition, this control operates a masking plate over the MAIN TUNING dial in order to expose only the scale of the particular frequency band selected.

b. MAIN TUNING CONTROL AND DIAL. The MAIN TUNING dial consists of a flat disk on which are engraved five scales. All but the frequency scale being used are covered by a masking plate as described in *a* above. The dial, which is translucent, is illuminated from the rear. The MAIN TUNING control is used to tune the receiver to the desired signal in the selected band.

c. BAND SPREAD CONTROL AND DIAL. The BAND SPREAD control and dial are used to simplify tuning over a narrow range of frequency.

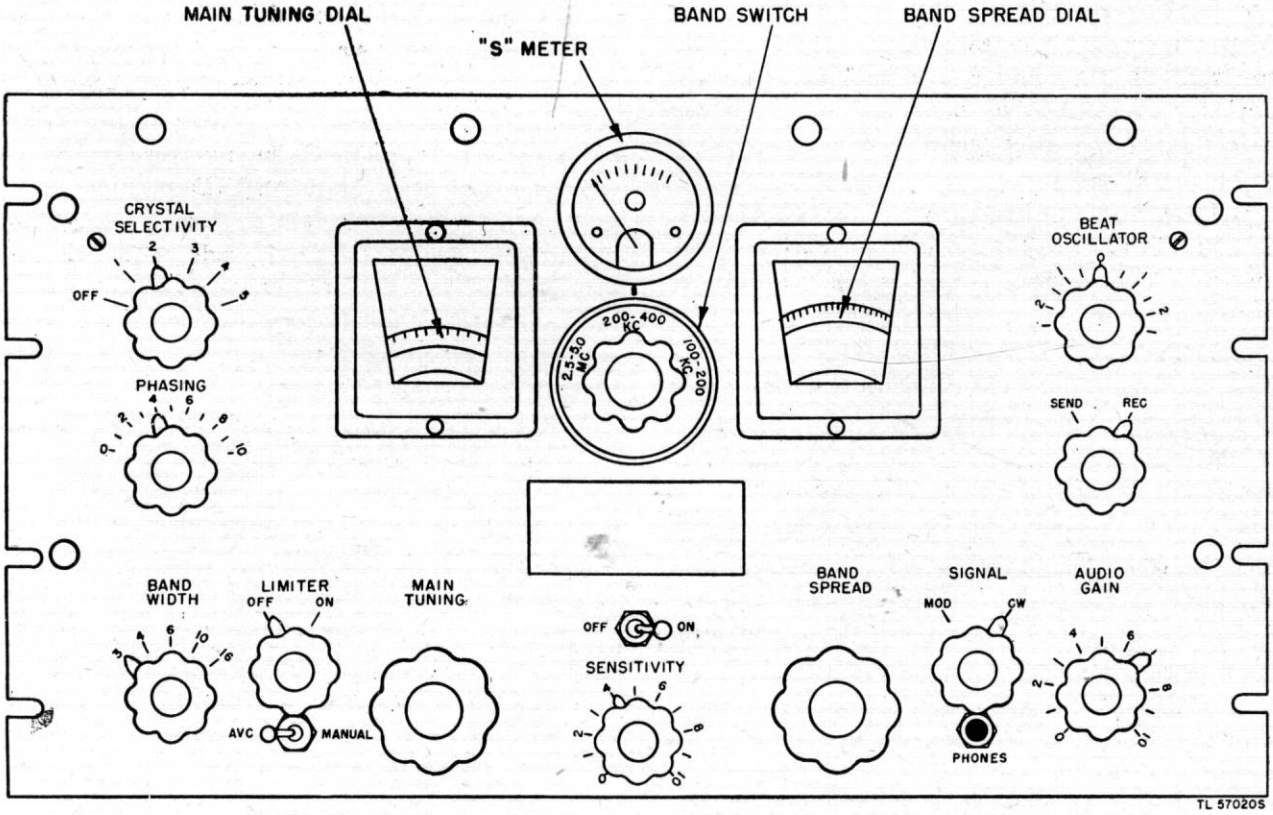

Figure 15. Radio Receiver BC-779-B, front panel.

ManualsPlus.com

The BAND SPREAD dial has a scale reading from 0 to 100. If set at 100, the frequency covered by moving the dial will extend from that shown by the setting of the MAIN TUNING dial to some lower frequency, depending on how far the BAND SPREAD dial is moved. The capacity of the BAND SPREAD capacitor increases as the scale approaches zero. The BAND SPREAD control is operative on all five bands of Radio Receiver BC–794–(*), the three highest frequency bands of Radio Receivers BC–779–(*) and BC–1004–(*), and the two highest frequency bands of Radio Receiver R–129/U.

d. S-METER. The meter in the center of the panel may be used for tuning when operating on AVC. The meter reading varies as the receiver is tuned through a signal, being highest at exact resonance. Strong signals produce higher meter readings than weak signals, therefore the actual meter reading at resonance is an indication of the strength of the incoming signal carrier. The meter circuit is adjusted at the factory so that a change of one S number on the meter indicates a change in signal strength of approximately two to one.

e. CRYSTAL SELECTIVITY CONTROL. This control is used to increase the selectivity of the receiver. The first three positions are generally used for radiophone reception and can serve for code reception if interference is not serious. The last two positions are for code reception only.

f. PHASING CONTROL. With the CRYSTAL SELECTIVITY control in any position but OFF, the PHASING control is used to eliminate heterodyne interference or whistle.

g. BAND WIDTH CONTROL. This control adjusts the bandwidth of the intermediate-frequency (i-f) stages of the receiver. Minimum bandwidth is obtained with the control set at 3. Clockwise rotation of the control increases the bandwidth.

h. LIMITER OFF-ON SWITCH. This switch turns the noise limiter on and off. The noise limiter is useful at the higher frequencies where interference from gas engine ignition systems and other noise sources is likely to be quite strong.

i. OFF-ON SWITCH. This switch is in series with the primary of the power supply unit transformer. When the switch is in the ON position, power is applied to the transformer, and the receiver operates.

j. AVC-MANUAL SWITCH. This switch, when set to the MANUAL position, permits the SENSITIVITY control to be used as an r-f volume control. In the AVC position, manual r-f volume control need not be used, since the SENSITIVITY control may be set to 10 and the a-v-c circuit will regulate the r-f gain.

k. SENSITIVITY CONTROL. This control is used to vary the receiver r-f gain when the AVC-MANUAL switch is at MANUAL. When the AVC-MANUAL switch is set to AVC, the SENSITIVITY control should be set to 10 for maximum r-f gain. However, various degrees of r-f gain and a-v-c action may be obtained at various settings of the control.

l. AUDIO GAIN CONTROL. This control varies the audio gain of the receiver.

m. SIGNAL MOD-CW SWITCH. When this switch is in the CW position, the beat frequency oscillator (bfo) is turned on. CW code signals can then be received. The bfo is also useful for locating weak signals of any kind. When the switch is in the MOD position, the bfo is turned off.

n. BEAT OSCILLATOR CONTROL. This control adjusts the frequency of the bfo and thus the pitch of the audible tone.

o. SEND-RECEIVE SWITCH. This switch is provided for use when the receiver is used with an associated transmitter. The receiver is silenced when the switch is in the SEND position. This position allows the receiver to remain ready for instant use. The RELAY terminals at the rear of the receiver (fig. 10) are for convenience in connecting a relay to disconnect automatically the receiver in preference to operating the SEND-REC switch.

p. PHONES JACK. This jack provides for the connection of a headset to the output of the receiver. The jack is in parallel with the PHONES terminal lugs on the rear of the receiver.

q. SPKR TERMINALS. These terminals on the rear of the receiver (fig. 10) are provided so that a permanent magnet type loudspeaker may be connected to the output of the receiver.

r. PHONO TERMINALS. These terminals at the rear of the receiver provide a convenient means of using the audio portion of the receiver as an audio amplifier, the input level to which may be regulated by the AUDIO GAIN control.

ManualsPlus.com

SECTION IV. OPERATION

16. Starting

a. Set the front panel controls as follows:

Control	Position
CRYSTAL SELECTIVITY	OFF
PHASING	On arrow
BAND WIDTH	3
LIMITER	OFF
AVC-MANUAL	AVC
SENSITIVITY	10
BAND SPREAD	100
SIGNAL MOD-CW	MOD
AUDIO GAIN	7
SEND-REC	REC
BEAT OSCILLATOR	0

b. Turn on the receiver by placing the OFF-ON power switch in the center of the panel to ON.

17. Radiophone Reception

a. Set the band switch to the band which covers the frequency of the signal to be received. Do this by turning the band switch knob until the engraving of the desired band on the band switch dial is at the top just beneath the vertical line above the dial.

b. Leave the band spread dial at 100 because all tuning can be done with the MAIN TUNING control. The band spread control spreads out a narrow band of frequencies *below* the frequency to which the MAIN TUNING dial is set.

c. Do all tuning, with or without the meter, with the BAND WIDTH control set at 3. Make bandwidth adjustments after the signal is tuned in properly. If interference is not serious adjust the BAND WIDTH control to a wider degree of selectivity (clockwise rotation) to obtain the best tone quality with the least interference.

d. If interference is present, adjust the CRYSTAL SELECTIVITY control to the optimum position. The first three positions are generally used for radiophone reception and will serve for code reception where interference is not serious.

e. After the CRYSTAL SELECTIVITY control is adjusted to the selectivity desired, rotate the PHASING control to eliminate heterodyne interference or whistle.

f. Turn the LIMITER ON-OFF control to ON to reduce the high-frequency noise caused by ignition interference, etc.

g. The receiver can be silenced by turning the SEND-REC switch to SEND. This allows the receiver to remain ready for instant service during transmission periods.

18. Code Reception

a. Place the AVC-MANUAL switch at MANUAL and turn down the SENSITIVITY control to provide proper sensitivity.

b. On strong signals, do not turn the SENSITIVITY control all the way on (clockwise) because it will cause overloading. By setting the AUDIO GAIN control at about 7, the volume can be regulated with only the SENSITIVITY control.

c. Turn on the beat frequency oscillator by setting the SIGNAL MOD-CW switch to CW position.

d. Place the CRYSTAL SELECTIVITY switch in position 4 or 5.

e. Tune in a code signal and adjust the BEAT OSCILLATOR control to obtain the desired pitch or tone, of the beat note. Since the desired tone may be obtained by setting the BEAT OSCILLATOR control to either side of the 0 (zero) marking, choose the side which gives the least interference.

f. Use the PHASING control to eliminate heterodyne interference.

19. Stopping

To turn off the receiver, place the OFF-ON switch at OFF.

Section V. EQUIPMENT PERFORMANCE CHECKLIST

20. Purpose and Use of Checklist

a. GENERAL. The equipment performance checklist (par. 21) will help the operator to determine whether the receiver and the power supply unit are functioning properly. The list gives the item to be checked, the conditions under which the item is checked, the normal indications and tolerances of correct operations, and the corrective measures the operator can take. Check items 1 through 14 before starting (before turning the equipment on), item 15 when starting, items 16 through 28 during

ManualsPlus.com

operation, and item 29 when stopping (when turning the equipment off). Items 16 through 28 of this list should be checked at least once during a normal operating period or at least four times a day during continuous operation.

b. Action or Condition. For some items, the information given in the action or condition column consists of the settings of various switches and controls under which the item is to be checked. For other items it represents an action that must be taken to check the normal indication given in the normal indications column.

c. Normal Indications. The normal indications listed include the visible and audible signs that the operator will perceive when he checks the items. If the indications are not normal, the operator should apply the recommended corrective measures.

d. Corrective Measures. The corrective measures listed are those the operator can make without turning in the equipment for repairs. When reference is made in the table to "part five" it indicates that the trouble cannot be corrected during operation and that trouble shooting by an experienced repairman is called for. If the set is completely inoperative or if the recommended corrective measures do not yield results, trouble shooting is necessary. However, if the tactical situation requires that communication be maintained and if the set is not completely inoperative, the operator must maintain the set in operation as long as it is possible to do so.

e. Items 1 through 15. Items 1 through 15 should be checked each time the equipment is put into operation.

f. Items 16 through 28. The operator should familiarize himself with the operation of the equipment so that he knows the characteristics of its reception of normal signals. By becoming familiar with the operation of the receiver, the operator will know the normal position of the SENSITIVITY and AUDIO GAIN controls. This will aid in an approximate determination of the sensitivity and amplification of the receiver.

g. Item 29. Item 29 is checked whenever the station is taken out of operation. Any abnormal indications at this time are probably caused by trouble in the set and should be corrected before the next expected period of operation.

21. Equipment Performance Checklist

	Item No.	Item	Action or condition	Normal indications	Corrective measures
PREPARATORY	1	Antenna	Lead-in wire connected.		
	2	Loudspeaker	Speaker cord connected to SPKR terminals.		
	3	Line cord	Line cord plug inserted into socket of a-c power source.		
	4	CRYSTAL SELECTIVITY control.	Set at OFF position.		
	5	PHASING control	Set pointer at arrow (5).		
	6	BAND WIDTH control	Set at position 3.		
	7	LIMITER switch	Rotate to OFF.		
	8	AVC–MANUAL switch	Set at AVC position.		
	9	SENSITIVITY control	Set at 10.		
	10	BAND SPREAD control.	Set at 100.		
	11	SIGNAL MOD–CW switch.	Set at MOD position.		
	12	AUDIO GAIN control	Set at 7.		
	13	SEND–REC switch	Set at REC position.		
	14	BEAT OSCILLATOR control.	Set at zero (0).		

ManualsPlus.com

	Item No.	Item	Action or condition	Normal indications	Corrective measures
START	15	OFF–ON switch	Turn to ON position.	Meter lamp and dial lamps go on.	Check fuse F1 on back of power supply unit. Check line cord. Check terminal screws on rear of receiver and power supply unit.
				Rushing noise is heard in loudspeaker.	Check tubes in receiver and power supply unit. Check speaker cord.
EQUIPMENT PERFORMANCE	16	MAIN TUNING control.	Set band switch control at any desired position. Tune across entire band by rotating MAIN TUNING control.	Signals heard in loudspeaker. S meter shows relative strength of signals.	If signals are received normally, but S meter indication is abnormal, trouble shooting is necessary. If signals are not obtained or if they are weak, check the antenna connections at the antenna terminals of the receiver. When a long wire antenna is in use, be sure that one of the terminals is connected to ground. Check tubes in receiver and power supply unit.
	17	BAND switch	Check each of the tuning ranges. Use procedure given in step 16 above.		
	18	BAND SPREAD control.	Rotate band switch to a high-frequency band and rotate the BAND SPREAD control from 100 to 0.	Same as normal indications in step 16 above.	
	19	PHONES jack	Insert phone plug into PHONES jack.	Signals heard on loudspeaker are audible in phones.	Check phones cord and plug.
	20	SENSITIVITY control ..	Tune in any station by rotating the MAIN TUNING control. Then rotate the SENSITIVITY control in either direction.	Strength of signal increases or decreases.	Refer to part five.
	21	AUDIO GAIN control...	Rotate control in either direction.	Strength of signal increases or decreases.	Refer to part five.
	22	SEND–REC switch	Turn to SEND position. (When check is completed, return to REC position.)	No sound is heard in loudspeaker or in phones.	Refer to part five.

ManualsPlus.com

	No. Item	Item	Action or condition	Normal indications	Corrective measures
EQUIPMENT PERFORMANCE	23	AVC–MANUAL switch ..	Turn to MANUAL position.	Strength of signal may or may not increase. S meter becomes inoperative.	Refer to part five.
	24	BAND WIDTH control..	Tune the receiver to a modulated signal and then rotate the BAND WIDTH control to each of the higher numbers.	The tuning is broader and the high-frequency response (audio) increases at the higher numbered positions.	Refer to part five.
	25	CRYSTAL SELECTIVITY control.	Set BAND WIDTH control at 3. Then set the CRYSTAL SELECTIVITY control at 1, 2, 3, 4, and 5.	The tuning of the receiver is sharper at the higher numbered positions.	Refer to part five.
	26	LIMITER	Turn switch to ON. Man-made static may be present.	Noise peaks are reduced in amplitude.	Refer to part five.
	27	MOD–CW switch	Turn switch to CW and tune in a c-w carrier on one of the high-frequency bands. (Be sure that the BEAT OSCILLATOR control is set at 0.)	Beat-frequency audio signal is heard in loudspeaker.	Check bfo tube V10.
	28	BEAT OSCILLATOR control.	Obtain beat note of c-w carrier as explained in step 27 above. Rotate the BEAT OSCILLATOR control on either side of 0.	A change in the pitch of the audio tone is is noted.	Refer to part five.
STOP	29	OFF-ON switch	Turn to OFF position.	Dial lamps and meter lamp go out. No noise or signals are heard in loudspeaker.	

ManualsPlus.com

PART THREE

MAINTENANCE INSTRUCTIONS

Section VI. PREVENTIVE MAINTENANCE TECHNIQUES

22. Meaning

Preventive maintenance (PM) is a systematic series of operations performed at regualr intervals on equipment, when turned off, to eliminate major break-downs and unwanted interruptions in service, and to keep equipment operating at top efficiency. To understand what is meant by PM, it is necessary to distinguish between preventive maintenance, trouble shooting, and repair. The prime function of PM is to prevent break-downs and, therefore, the need for repair. On the other hand, the prime function of trouble shooting and repair is to locate and correct the existing defects. The importance of PM cannot be overemphasized. The entire system of radio communication depends upon each set's being on the air when it is needed and upon its operating efficiency. Therefore, it is important that radio operators and repairmen maintain their radio sets properly. See TB SIG 178, Preventive Maintenance Guide for Radio Communication Equipment.

Note. The operations in sections VI and VII are organizational maintenance.

23. Description of Techniques

a. General. Most of the electrical parts used in the equipment require routine preventive maintenance. This PM varies. Some parts require a different kind of maintenance than others. Some require more; some less. Follow definite and specific instructions. Do not apply hit-or-miss techniques. This section of the manual contains specific instructions to guide personnel assigned to perform the six basic maintenance operations: Feel, Inspect, Tighten, Clean, Adjust, and Lubricate. Throughout this manual the lettering system for the six operations will be as follows:

F—Feel
I—Inspect
T—Tighten
C—Clean
A—Adjust
L—Lubricate

The first two operations show if the other four are needed. Selection of operations is based on a knowledge of field needs. For example, dust encountered on dirt roads during cross-country travel filters into equipment no matter how much care is taken to prevent it. Rapid changes in weather (such as heavy rain followed by blistering heat), excessive dampness, snow, and ice tend to cause corrosion of exposed surfaces and parts. Without frequent inspections and the necessary tightening, cleaning, and lubricating operations, equipment becomes undependable and subject to break-down when it is needed most.

b. Feel. The feel operation is used to determine whether transformers and electrical connections are overheated. Feeling will show the need for lubrication or the existence of other defects requiring correction. The maintenance man must become familiar with the normal operating temperatures of transformers and other parts to recognize signs of overheating.

Note. It is important to perform the feel operation as soon as possible after shut-down and always before any other maintenance is done.

c. Inspect. Inspection is the most important operation in PM. A careless observer will overlook evidences of minor trouble. Although minor defects may not at the moment interfere with performance of the equipment, time and effort can be saved if they are corrected before they lead to major and costly break-downs. To be able to recognize the signs of a defective set, make every effort to become thoroughly familiar with indications of normal functioning. Inspection consists of carefully observing all parts of the equipment, noticing their color, placement, state of cleanliness, etc. Inspect for the following conditions:

(1) Overheating, as indicated by discoloration, blistering, or bulging of the parts or surface of

ManualsPlus.com

the container; leakage of insulating compounds; and oxidation of metal contact surfaces.

(2) Placement, by observing that all leads and cabling are in their original positions.

(3) Cleanliness, by carefully examining all recesses in the units for accumulation of dust, especially between connecting terminals and binding posts. Parts, connections, and joints should be free from dust, corrosion, and other foreign matter. In tropical and high-humidity areas, look for fungus growth and mildew.

(4) Tightness, by testing any connection or mounting which appears to be loose.

d. Tighten, Clean, and Adjust. These operations explain themselves. Specific procedures to be followed in performing them are given whenever necessary throughout sections VI and VII.

Caution: Screws, bolts, and nuts should not be tightened carelessly. Fittings tightened beyond the pressure for which they are designed will be damaged or broken. Whenever a loose connection is tightened, it should be moistureproofed and fungiproofed again by applying the varnish with a small brush. See section IX for details of moistureproofing and fungiproofing.

e. Lubricate. Lubrication refers to the application of grease or oil to the bearings of motors or rotating shafts. It may also mean the application of a light oil to door hinges or other sliding surfaces on the equipment.

24. Vacuum Tubes

Note. Do not work on the tubes immediately after shutdown. Severe burns may result from contact with the envelopes of hot tubes.

a. Inspect (I). (1) Inspect glass and metal tube envelopes, tube caps, and tube connector clips for dirt and corrosion. Tubes with loose grid caps or envelopes should be replaced if possible.

(2) Examine the spring clips that make contact with the grid caps for corrosion and for loss of tension with resulting looseness. Check the condition of wires soldered to the spring clips. The wires should be free from frayed insulation or broken strands.

(3) Inspect the firmness of tubes in their sockets. Make the inspection by pressing the tubes down in the sockets and testing them in that position but not by partially withdrawing the tubes and jiggling them from side to side. Sidewise movement of a tube tends to weaken the pins in the base and to spread the contacts in the socket. Inspect the sockets when the tubes are removed.

(4) Be careful when removing a tube from its socket. Never jar a warm tube. Always remove connections to the grid caps.

b. Tighten (T). Tighten all loose connections to the tube sockets and to the tubes. If the connections are dirty or corroded, clean them before tightening. When tightening locknuts that hold the sockets to the insulated bushings, do not apply excessive pressure. Too much pressure will crack the bushings.

c. Adjust (A). Adjust loose tube connector clips. Do not flatten the clips during adjustment. Flattened clips do not make adequate contact with the surface of the tube cap. If the clip is made of thin metal, it can be adjusted by gently compressing it with the fingers. If it is made of heavy-gage metal, suitable pressure can be applied with a pair of long-nose pliers.

d. Clean (C). (1) Clean the tubes, if necessary. Tubes operated at high voltages and with exposed grid connections must be kept free from dirt and dust because of possible leakage between grid terminals and ground. In contrast, tubes operating at low voltages and not having exposed grid caps do not require frequent cleaning; however, do not permit dirt to accumulate on low-voltage tubes.

(2) Remove dust and dirt from the glass or metal envelopes with a clean, lint-free, dry cloth. If proper care is used, the grid caps may be cleaned with a piece of #0000 sandpaper by wrapping the paper around the cap and gently rubbing the surface. Extreme pressure is not needed; nor is it necessary to grip the cap tightly. Wipe the cap with a clean, dry cloth.

(3) When cleaning tube sockets, if the contacts are accessible, fine sandpaper may be used to remove corrosion, oxidation, and dirt.

25. Capacitors

a. Inspect (I). (1) Inspect the terminals of large fixed capacitors for corrosion and loose connections. Carefully inspect the mountings to discover loose mounting screws, studs, or brackets. Examine the leads for poor insulation, cracks, and evidences of dry rot. Cut away frayed strands on the insulation. Wrap exposed wire with friction tape. See that the terminals of the capacitors are not cracked or broken.

(2) Thoroughly inspect the case of each large

ManualsPlus.com

fixed capacitor for leaks, bulges, and discoloration.

(3) Inspect the plates of variable capacitors for dirt, dust, or lint. Examine the movable plates for damage or misalinement that would cause them to touch the fixed plates during tuning. Rotate the movable plates, using the panel tuning control, to check for proper operation of the capacitor.

b. TIGHTEN (T). Tighten loose terminals, mountings, and connections on the capacitors, when necessary. Do not break the bushing or damage the gasket.

c. CLEAN (C). (1) Clean the cases of fixed capacitors, the insulated bushings, and all connections that are dirty or corroded. The capacitor cases and bushings usually can be cleaned with a dry cloth. However, if the deposit of dirt is hard to remove, moisten the cloth in Solvent, Dry Cleaning (SD).

(2) Thoroughly clean the plates of variable capacitors with a small brush or pipe cleaner. Dust, if present, may cause arcing.

26. Resistors

a. GENERAL. The connections to the various types of resistors used in the equipment are either of the pigtail or solder-lug type.

b. INSPECT (I). Inspect the coating of vitreous-enameled resistors for signs of cracking and chipping, especially at the ends. Examine the bodies of all resistors for blistering, discoloration, and other indications of overheating. Inspect all leads and connections for corrosion, dirt, dust, looseness, and broken strands in connecting wires. Check the security of all mountings. Do not attempt to remove resistors with pigtail connections, because there is danger of breaking the connections at the point where they enter the body of the resistor. Such defects cannot be repaired.

c. TIGHTEN (T). Tighten resistor connections and mountings whenever they are found to be loose. If a resistor is allowed to remain loose, vibration may break the connection or damage the body.

d. CLEAN (C). (1) Clean all carbon resistors with a small brush.

(2) The vitreous-enameled resistors must be kept clean to avoid leakage between the terminals. Wipe them with a dry cloth. However, if the dirt deposit is unusually hard to remove, use solvent (SD).

(3) Resistors with discolored bodies cannot be cleaned. Discoloration indicates that there has been overloading and overheating at some time prior to the inspection. The discoloration is probably due to circuit trouble which requires analysis and correction.

27. Fuses

a. GENERAL. Fuses used in this equipment are glass encased. They are easily removed for inspection. Blown fuses should be thrown away.

b. INSPECT (I). Inspect the fuse caps for evidence of burning, charring, and corrosion; the fuse clips for dirt, loose connections, and loss of tension.

c. TIGHTEN (T). The tension of the fuse clips may be increased by pressing the sides closer together. If necessary, use pliers to adjust the tension.

d. CLEAN (C). Clean fuse ends and fuse clips with #0000 sandpaper and wipe them with a clean cloth. When using a file to remove deep pits on the clips, fuse ends, or contacts, always finish up with crocus cloth to leave a smooth contact surface. As a final step, wipe the surface with a clean, dry cloth.

28. Insulators

a. DESCRIPTION. Insulators are used in the receiver, power supply unit, and antenna. They are constructed of ceramic material with a glazed surface. An insulator is no better than its surface. Deposits of foreign substances on the surface reduce the insulation value. Therefore, inspect all insulators frequently.

b. INSPECT (I). Inspect the physical condition of the insulators. They should be clean and without cracks or chips. A highly glazed insulator may develop fine-line surface cracks where moisture and dust will accumulate and eventually form a leakage path.

c. TIGHTEN (T). The procedure to be used in tightening loose insulators is self-evident. However, one precaution must be observed. *Avoid forcing the nuts or screws down too tight.* If excessive pressure is exerted on the insulators, damage or breakage is almost certain.

d. CLEAN (C). Insulators are easily cleaned. Never use abrasive materials because the glazed finish will be destroyed, thus permitting moisture to be absorbed. A clean cloth is usually satisfactory. If deposits of grime or dirt on the surface of a bushing are hard to remove, use solvent (SD). After the surface has been cleaned with solvent (SD), carefully polish it with a dry cloth. Otherwise, a thin film of the solvent will be left which may impair the effectiveness of the insulator.

29. Switches

a. INSPECT (I). (1) Inspect the mechanical action of each switch and, while so doing, look for

ManualsPlus.com

signs of dirt or corrosion on all exposed elements. In some cases it will be necessary to examine the elements of the switch visually; in others, check the action of the switch by flipping the control knob or toggle, or by pressing the switch button and noting the freedom of movement and amount of spring tension.

(2) Examine ganged switches SW1A, B, C, D, E, and SW7 to see that the contacts are clean. Inspection is visual. Do not pry the leaves of the switch apart. The rotary members should make good contact with the stationary members. As the former slides into the latter, a spreading of the stationary contact leaves should be visible. Switch action should be free. The wiping action of contacts usually removes any dirt at the point of contact.

b. CLEAN (C). Clean the exterior surfaces of switches with a stiff brush, moistened with solvent (SD).

30. Coils

a. INSPECT (I). Inspect coils L1 through L55 (depending on which model is being used) for cleanliness of the fiber coil form and secureness of mounting supports. Check all connections for proper contact.

b. TIGHTEN (T). Tighten any loose coil mounting or connections by resoldering wires or tightening screws.

c. CLEAN (C). Clean the coil form and coil with a soft brush. Remember the fiber coil form is actually performing the function of a high-voltage insulator. Therefore, the same preventive maintenance will apply to the coil as to high-voltage insulators and bushings.

31. Potentiometers

a. INSPECT (I). (1) Inspect the mechanical condition of potentiometers R26 and R56. The arm should be keyed tightly to the shaft, and the shaft should turn easily in the bushing which supports it.

(2) Inspect the assembly and mounting screws, setscrews, and nuts.

(3) Examine the insulating body of the potentiometer for dust, dirt, cracks, and chipped places.

(4) Examine all metallic parts for dust, dirt, and corrosion.

b. TIGHTEN (T). Tighten loose assembly or mounting screws.

c. CLEAN (C). (1) Clean the exposed contact surfaces of the potentiometer and the connections whenever they are dirty or corroded.

(2) Remove grease and dirt from the potentiometer parts with carbon tetrachloride.

(3) If the contact surfaces are corroded, clean them with crocus cloth.

(4) Clean the body of the potentiometer with a brush or cloth.

d. LUBRICATE (L). Refer to section VIII.

32. Terminal Blocks

a. INSPECT (I). (1) Inspect terminal blocks for cracks, breakage, dirt, loose connections, and loose mounting screws.

(2) Carefully examine connections for mechanical defects, dirt, and corrosion.

b. TIGHTEN (T). Tighten loose screws, lugs, and mounting bolts. When tightening screws, be sure to select a screw driver of correct size. Do not exert too much pressure. Tighten loose connections.

c. CLEAN (C). Clean terminal blocks when they require it. Use a dry brush, or, if necessary, use a cloth moistened with solvent (SD). Thoroughly wipe the blocks with a cloth and then brush them to remove any lint.

33. Cords and Cables

The cables are the life lines of the equipment. Their condition must be observed closely. Operating equipment in all kinds of weather, and moving it on all kinds of roads, subjects cabling to a great deal of punishment.

a. INSPECT (I). Inspect the cables for cracked or deteriorated insulation, for frayed or cut insulation at the connecting and supporting points, for kinks and improper supports, and for improper placement which causes a strain on them.

b. TIGHTEN (T). Tighten loose cable clamps, coupling rings, and cable connections.

c. CLEAN (C). Clean connections on cables when they are dirty or corroded. Clean corroded connectors with #0000 sandpaper. Clean the entire surface of the connector. Make no attempt to remove individual prongs from cable plugs.

34. Meter

Meters are extremely delicate and must be handled carefully. They require very little maintenance. They are precision instruments and ordinarily cannot be repaired in the field.

ManualsPlus.com

a. INSPECT (I). Inspect the leads and connections of the meter. Look for loose, dirty, and corroded connections. Look for cracked or broken cover glasses. Since the movement of a meter is extremely delicate, its accuracy will be seriously affected if the glass is broken and dirt and water filter through.

b. TIGHTEN (T). Tighten all connections found loose. Any loose meter wires should be inspected for dirt or corrosion before they are tightened. The tightening of meter connections requires a special technique because careless handling can easily crack the meter case.

c. CLEAN (C). The meter case can usually be cleaned with a dry cloth. If cleaning is difficult, dampen the cloth with solvent (SD). Clean dirty connections with a small brush or with a small piece of cloth dipped in carbon tetrachloride.

d. ADJUST (A). Normally, the meter on the panel should indicate zero when the equipment is turned off. Before deciding that a meter needs readjusting, tap the meter case lightly with the tip of one finger. This will help the needle to overcome the slight friction which sometimes exists at the bearings and prevents an otherwise normal unit from coming to rest at zero. If adjustment is needed, insert the tip of a suitable screw driver into the slotted screw head located below the meter glass and slowly turn the adjusting screw until the pointer is at zero. Lightly tap the meter case again and view the meter face and pointer *full on* and not from either side. Avoid turning the screw too far, because the needle may be bent or the hairspring damaged.

35. Pilot Lamps

Pilot lamps are used to indicate when power has been applied to a circuit. They are easily removed and replaced.

a. INSPECT (I). Inspect the pilot lamp assemblies for loose lamps, loose mounting screws, and loose, dirty, or corroded connections.

b. TIGHTEN (T). (1) Tighten loose mounting screws and resolder any loose connections. If the connections are dirty or corroded, clean them before soldering.

(2) Screw loose lamps tightly into their sockets.

36. Jacks and Plugs

Jacks require very little attention, and then only at infrequent intervals. Occasionally it will be necessary to tighten the mounting nut, clean the contacts, or increase the spring tension. Remove dirt with a brush and carbon tetrachloride; remove corrosion with a piece of crocus cloth followed by a clean cloth. Increase spring tension, when necessary. Try the action of the jack after each adjustment. Be sure to keep all soldered connections intact. To clean dirty or corroded telephone-type plugs, use paste metal polish (Signal Corps stock No. 6G1516). After cleaning, remove all traces of polish remaining with carbon tetrachloride. Finish off with a clean, dry cloth.

37. Cabinets, Chassis, and Mountings

The cabinets which house the various components of the equipment are constructed of sheet steel, coated with crackle finish.

a. INSPECT (I). Thoroughly inspect the outside and inside of each cabinet. Check the ventilator mountings, the panel screws, and the zero settings of the meter. Inspect the panels for loose knobs, switches, and jacks.

b. CLEAN (C). Clean each cabinet, outside and in, with a clean, dry cloth. Use dry, compressed air to blow out all accumulated dirt and dust. Repaint any surface that is found scratched, rusted, or chipped.

c. TIGHTEN (T). Tighten all loose mounting bolts, panel screws, plugs, and control knobs.

38. Headset and Loudspeaker

These auxiliary items of equipment are essential to the operation of the radio set. The operator must therefore give them the same care as the set itself.

a. INSPECT (I). Inspect all external surfaces for dirt and corrosion. See that all cable connections are tight and that plugs and jacks fit together properly.

b. CLEAN (C). Clean all items of the equipment in accordance with the instructions outlined previously for cords, jacks, cabinets, etc.

39. Coupling Shafts and Control Knobs

The control of various capacitors, switches, and resistors is effected through coupling shafts that connect these items to control knobs located on the front panel. It is important that these shafts and control knobs be kept tight at all times. Use a small screw driver to tighten these items whenever they are found loose. Refer to section VIII for lubrication information.

ManualsPlus.com

40. Gears

a. INSPECT (I). Inspect the teeth of the gears on the band change switch for dirt or corrosion. Check the gears for proper operation by varying the panel tuning controls.

b. CLEAN (C). If the gears are dirty, clean them with a pipe cleaner or small brush dipped in solvent (SD).

c. LUBRICATE (L). Refer to section VIII.

41. Power Transformers, Filter Chokes, and Audio Transformers

Since power transformers, filter chokes, and audio transformers used in the equipment are of similar potted construction, preventive maintenance for them is similar.

a. FEEL (F). As soon as possible after shutdown, feel filter chokes L1 and L2 for abnormal heating which may indicate an overloaded condition, or imminent failure due to moisture absorption or other causes. Likewise feel audio transformers T7 and T8 for abnormal heating. Power transformer T3 normally operates at a warm temperature.

b. INSPECT (I). Inspect power transformer T3, filter chokes L1 and L2, and audio transformers T7 and T8, for signs of blistering, bulging, or leakage of tar or insulating compounds. Inspect for external signs of electrolytic action or corrosion.

c. TIGHTEN (T). Tighten all mounting bolts or screws, but not to the point that threads are destroyed. The securing of such heavy parts as transformers and chokes to the chassis is very important in preventive maintenance. Should a heavy filter choke or transformer break loose from its mounting in vehicular use or in transit, it may smash tubes, resistors, and capacitors, and at the same time sever a large number of connections.

d. CLEAN (C). Clean power transformers, filter chokes, and audio transformers with a dry cloth. Be sure that no dirt, lint, threads, or foreign material is present between terminals. Dirt, lint, and threads absorb moisture which may provide a leakage path for high voltages between these terminals. Be sure that none is present.

Section VII. ITEMIZED PREVENTIVE MAINTENANCE

42. Introduction

For ease and efficiency of performance, preventive maintenance on the equipment is broken down into operations that can be performed at different time intervals. In this section the PM to be performed on the radio set at the specific time intervals is broken down into units of work called items. The general techniques involved and the application of the FITCAL operations in performing PM on individual parts are discussed in section VI. These general instructions are not repeated in this section. When performing PM, refer to section VI if more information is required for the following items. Perform all work with the power removed from the equipment. After PM has been performed on a given day, put the equipment into operation and check it for satisfactory performance. (See par. 21.)

43. Tools and Materials Needed

The following PM tools and materials will be needed:

Common hand tools.
Clean cloth.
#0000 sandpaper.
Crocus cloth.
Contact burnishing tool.
Paste metal polish (Signal Corps stock No. 6G1516).
Dry-cleaning solvent (SD).
Carbon tetrachloride.

Note. Gasoline will not be used as a cleaning fluid for any purpose.

44. Item 1, Exterior of Receiver and Power Supply Unit (fig. 16)

OPERATIONS

IC	Cabinet.
ITC	Jacks.
ITAL	Control knobs.
IC	Meter.
T	Loose screws, nuts, and bolts.
IC	Metal accessories.
IT	Nuts.

REMARKS. Equipment should not be taken out of operating position because of minor scratches, chips, blisters, or dents in its exterior unless such damage could result in injury to the operator, in improper functioning, or major deterioration of the equipment. Control knobs with minor cuts and chips should not be discarded and replaced except in cases where proper functioning of equipment or operator's safety requires it. Such minor damage should be touched up on the spot, if conditions permit, but should not be considered sufficient cause for replace-

ManualsPlus.com

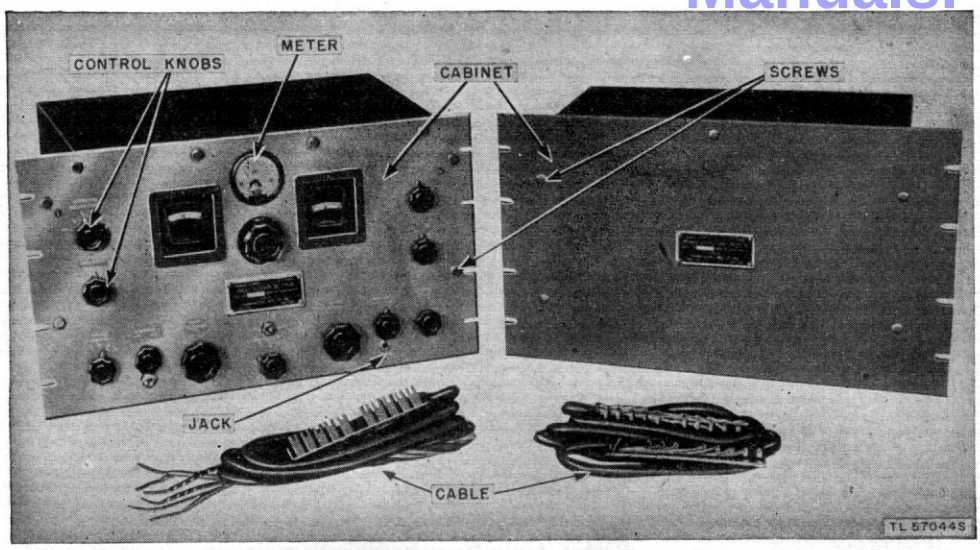

Figure 16. Radio receiver and power supply unit, typical preventive maintenance items, exterior view.

ment of equipment. Remove all dirt, dust, rust, fungus, and other foreign matter. Use solvent (SD) on exposed metal parts. Use a damp cloth on painted parts. Use carbon tetrachloride on exposed electrical contacts such as the antenna, the speaker and phones, the relay, and the power supply terminals located on the back of the receiver and power supply unit. These remarks apply to all other parts of the equipment.

45. Item 2, Cable

OPERATIONS.

IC	Cable.

46. Item 3, Headset

OPERATIONS.

I	Rubber portion of ear plugs.
IC	Breast clamp.
IT	Sleeve on phone plugs.
I	Metal part of headband.

REMARKS. Tighten any loose sleeves of a phone plug BY HAND ONLY.

47. Item 4, Interior and Power Supply Unit (fig. 17)

OPERATIONS.

I	Chassis.
I	Wiring and soldered joints.
ITC	Capacitors.
ITCA	Tubes and sockets.
FITC	Transformers and chokes.
I	Power plug.
ITC	Resistors.
T	Nuts and screws.
IC	Terminal blocks.

48. Item 5, Interior of Receiver (fig. 18)

OPERATIONS.

I	Chassis.
I	Wiring and soldered joints.
ITCA	Tubes and sockets.
I	Transformer shields.
ITC	Capacitors.
I	Crystal unit.
ITC	Resistors.
IT	Potentiometers.
ITC	Bushings and insulators.
I	Chokes.
FITC	Audio transformers.
FITAL	Coupling shafts.
T	Nuts and screws.
ITC	Coils.
ICL	Gears.
IC	Terminal blocks.

REMARKS. Do not touch adjusting screws on transformers.

ManualsPlus.com

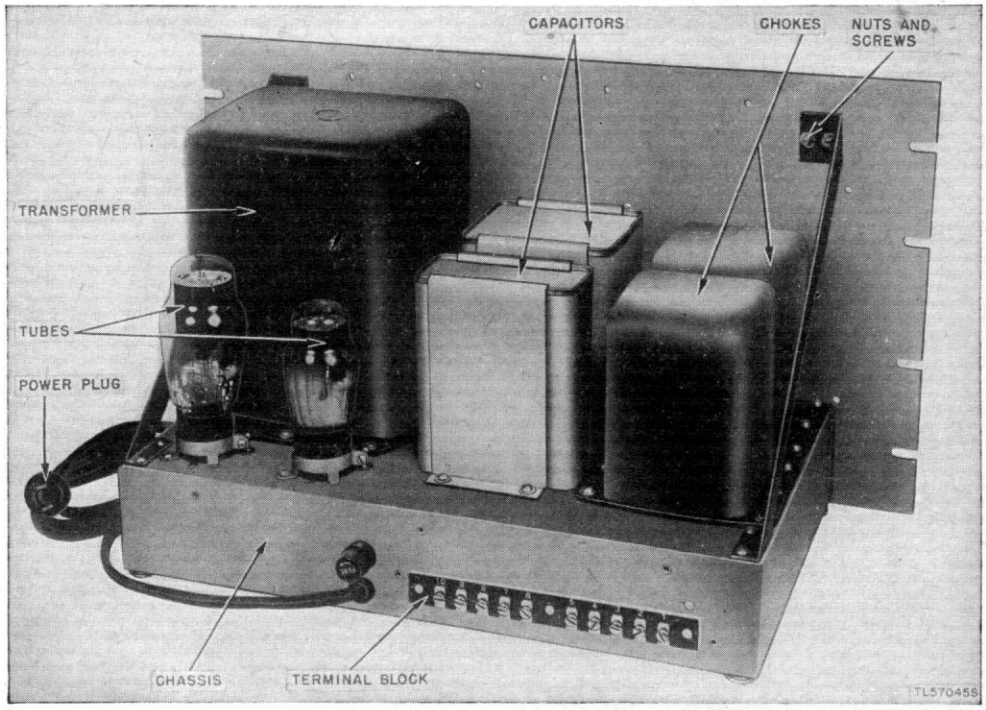

Figure 17. Power supply unit, typical preventive maintenance items, top view of chassis.

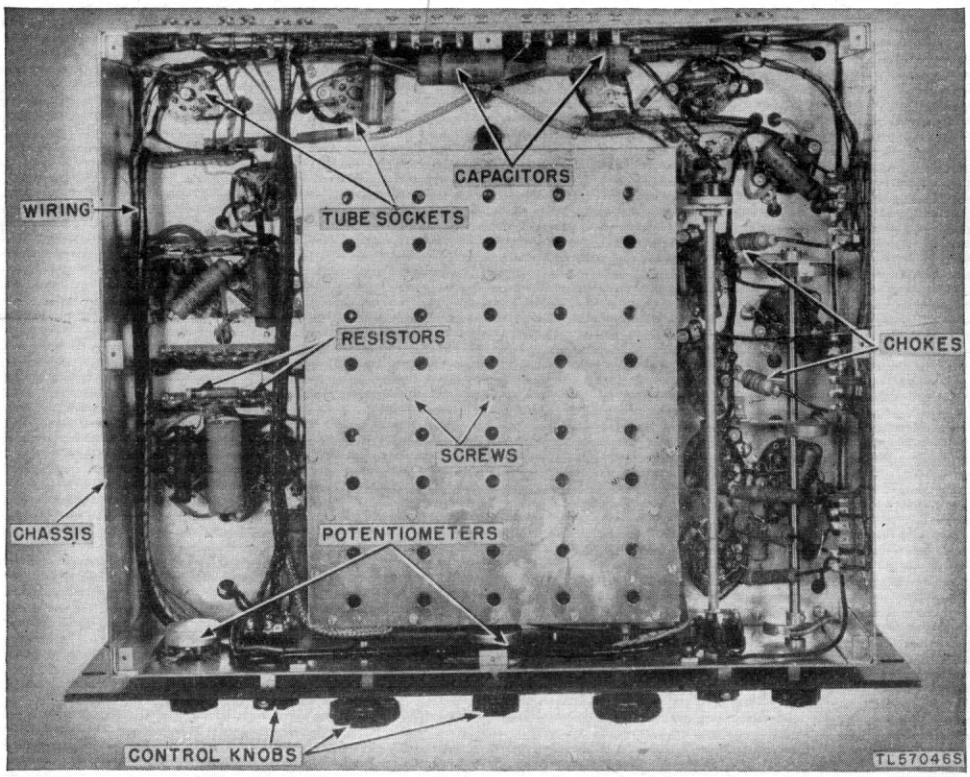

Figure 18. Radio receiver, typical preventive maintenance items, bottom view of chassis.

ManualsPlus.com

49. Preventive Maintenance Checklist

The following checklist is a summary of the PM operations to be performed on the equipment. The time intervals shown on the checklist may be reduced at any time by the local commander. For best performance of the equipment, perform operations at least as frequently as called for in the checklist.

The "Maintenance performed by" column indicates those operations performed by the operator and those performed by maintenance personnel. Operations are indicated by the letters of the word FITCAL. For example, if the letters ITCA appear in the "Operations" column, the item to be treated must be inspected (I), tightened (T), cleaned (C), and adjusted (A).

Item No.	Operations	Item	When performed				Maintenance performed by
			Daily	Weekly	Monthly	Quarterly	
1	ITCA	Exterior of receiver and power supply unit.	X	.....	.....	.....	O
1	L	Power supply unit	.....	.....	.....	X	O
2	IC	Cable	.....	.....	X	.....	M
3	ITC	Headset	X	.....	.....	.....	O
4	FITCA	Interior of power supply unit.	.....	X	.....	.....	M
5	FITCA	Interior of receiver	.....	X	.....	.....	M
5	L	Interior of receiver	.....	.....	.....	X	M

Note. X indicates when operations are to be performed; O indicates operator; and M indicates maintenance personnel.

F	I	T	C	A	L
Feel	Inspect	Tighten	Clean	Adjust	Lubricate

Section VIII. LUBRICATION

Note. A Lubrication Order has not been issued on these radio sets.

50. Recommended Lubricants and Cleaner

Symbols	Standard nomenclature
PL—SPECIAL	Oil, lubricating, preservative, special.
GL	Grease, lubricating, special.
SD	Solvent, dry-cleaning.

51. Detailed Lubrication Instructions

a. The location of the points on the receivers requiring lubrication and the type of lubricant to be used are illustrated in figure 19. Lubrication is not required at any point not included in the illustration. The recommended lubricants are suitable for all temperatures at which these receivers are operated.

b. Lubricate the equipment before storing it. Inspect and lubricate it, if it appears to be necessary, before putting it into operation after a period of storage. During a period of normal operation, lubricate the receivers at 3-month intervals. This time interval is based upon a normal usage of approximately 8 hours daily. Lengthen or shorten the interval according to actual operating conditions.

c. When lubricants are to be applied, thoroughly clean the point to be lubricated, and all other parts affected, with solvent (SD) and dry with a lint-free cloth.

d. Apply all lubricants very sparingly to these receivers. Use only one drop at each lubrication point when oil (PL—SPECIAL) is specified. Apply a thin coat of lubricating grease (GL) at points where GL is specified.

e. After the lubricant has been applied, rotate each affected control shaft through at least two complete rotations to distribute the lubricant evenly.

f. Remove excess lubricants.

ManualsPlus.com

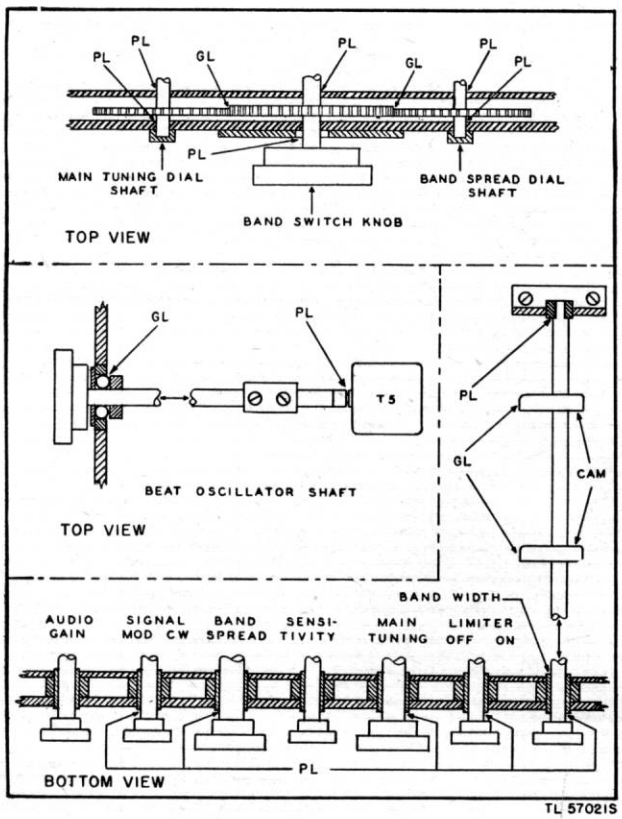

Figure 19. Receiver lubrication diagram.

Section IX. WEATHERPROOFING

52. General

When operated under severe climatic conditions such as prevail in Arctic, desert, or tropical regions, Signal Corps equipment requires special attention.

53. Tropicalization

a. General. Since fungus growth, insects, corrosion, salt spray, and moisture affect most materials, a special moistureproofing and fungiproofing treatment has been devised which, if properly applied, provides a reasonable degree of protection. Refer to TB SIG 13 for a detailed description of the varnish-spray method and the supplies and equipment required for this treatment.

b. Problems Encountered. The following problems may be encountered:

(1) Resistors, capacitors, coils, chokes, transformer windings, etc., fail because of the effects of fungus growth and excessive moisture.

(2) Electrolytic action, often visible in the form of corrosion, takes place in resistors, coils, chokes, transformer windings, etc., causing eventual breakdown.

(3) Hook-up wire insulation and cable insulation break down. Fungus growth accelerates deterioration.

(4) Moisture forms electrical paths on terminal boards and insulating strips, causing flash-overs and crosstalk.

54. Radio Receivers BC–779–(*), BC–794–(*), BC–1004–(*), and R–129/U

(figs. 20 and 21)

a. Preparation. Make all repairs and adjustments necessary for proper operation of the receivers.

b. Disassembly. (1) Remove the two screws holding the terminal strip cover to the chassis, and remove the cover.

(2) Loosen the 10 screws holding the cable to the terminal strip, and remove the cable. Tighten the screws on the terminal strip.

(3) Remove the eight screws holding the front panel of the receiver in Cabinet CH–104–(A) or in the relay rack, and pull out the chassis.

(4) Remove the 11 knurled screws and lockwashers holding the cover to the front panel and chassis, and take off the cover.

(5) Remove the nine felt feet holding the bottom cover to the chassis, and take off the cover.

(6) Loosen the setscrews holding the beat-oscillator knob and shaft coupling to the capacitor in transformer T5.

(7) Take out the nuts and lockwashers holding the shields of transformers T2, T3, T4, T5, and T6 to the chassis and other components, and remove the shields.

(8) Remove the two upper coil-capacitor assemblies, which control the bandwidth, from their supporting shafts.

(9) Remove the two springs from their supporting shafts.

(10) Remove 33 screws holding the alinement cover to the chassis and remove the cover.

(11) Remove the meter leads from the meter binding posts, unscrew the meter retaining ring, and remove the meter.

c. Cleaning. Clean all dirt, dust, rust, and fungus from the equipment to be processed. Clean all oil and grease from surfaces to be varnished.

ManualsPlus.com

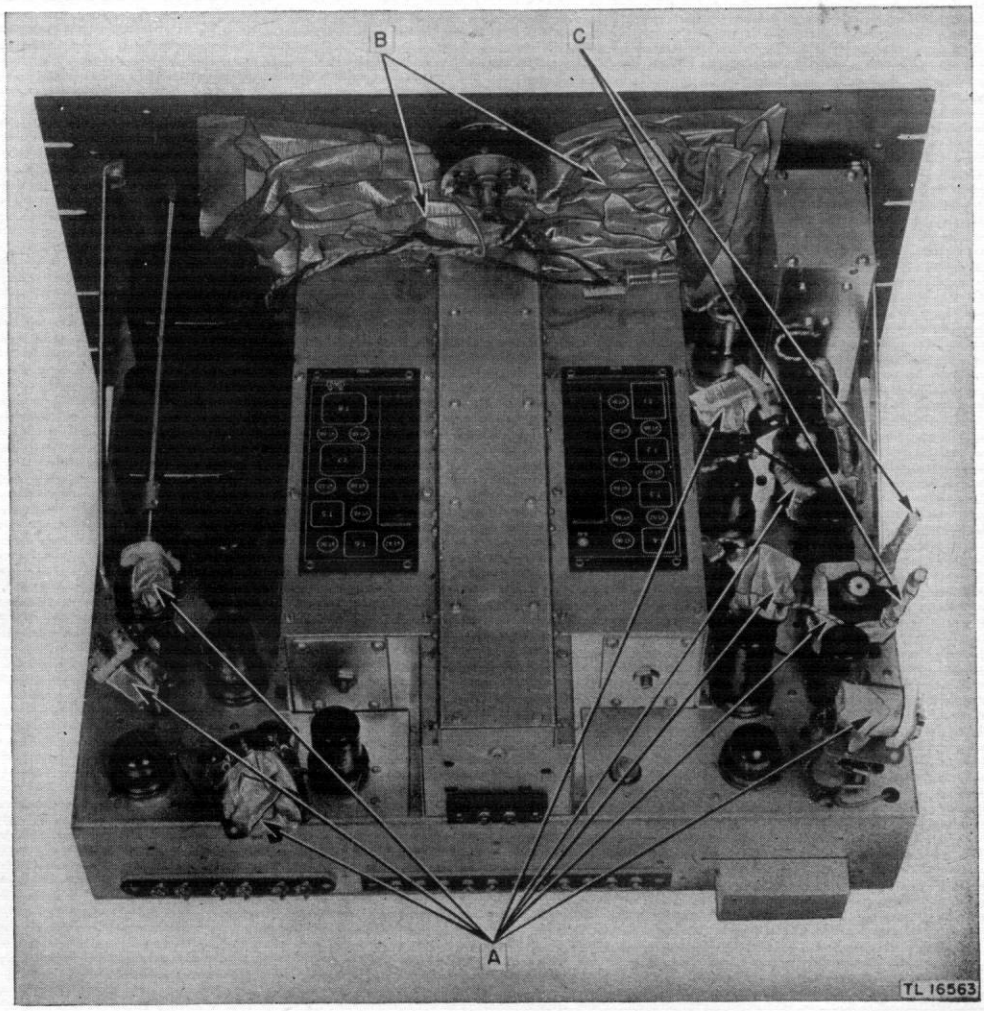

Figure 20. Radio Receiver BC-1004-C, top view of chassis, showing masking.

d. MASKING. Cover the following components with masking tape:

(1) Eight capacitors on transformers T2, T3, T4, T5, and T6 (A, fig. 20).

(2) Drive gears and tuning mechanism (B, fig. 20).

(3) Supporting shafts on coil-capacitor assemblies (C, fig. 20).

(4) Cams and levers on bandwidth selector-mechanism shaft (A, fig. 21).

(5) Capacitors in alinement-adjustment section (B, fig. 21).

(6) Friction drive wheels of main tuning and band spread selecting mechanism (C, fig. 21).

(7) Phone jack (D, fig. 21).

e. DRYING. (1) Place equipment in an oven or under heat lamps and dry for 2 or 3 hours at 160° F.

(2) If wax should begin to melt on any of the components, decrease the temperature and increase the baking time approximately 1 hour for each decrease of 10° F.

f. VARNISHING. (1) Apply three coats of moistureproofing and fungiproofing varnish (Lacquer, Fungus-resistant, Spec. No. 71-2202 (stock No. 6G1005.3), or equal) on the components. Allow each coat to air-dry for 15 or 20 minutes before applying the next coat.

Caution: Varnish spray may have poisonous effects if inhaled. To avoid inhaling spray, use respirator if available, otherwise fasten cheesecloth or other cloth material over nose and mouth. Never spray varnish or lacquer near an open flame. Do not smoke in a room where varnish or lacquer is being sprayed. The spray may be highly explosive.

ManualsPlus.com

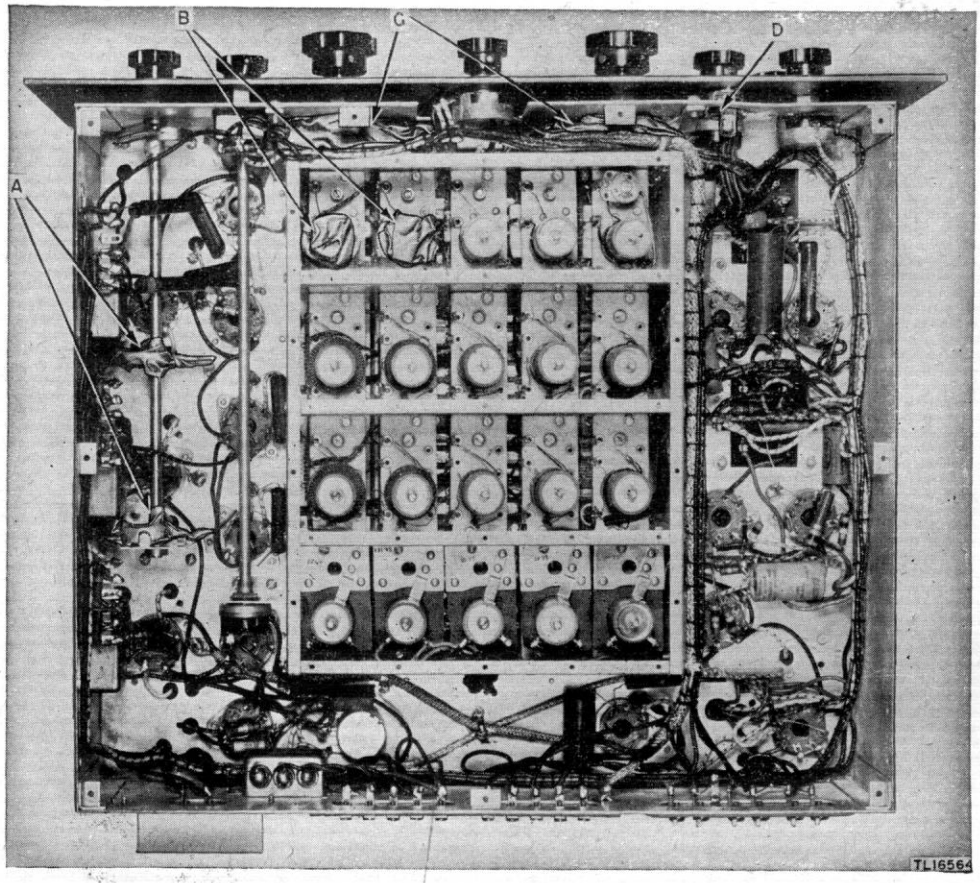

Figure 21. Radio Receiver BC-1004-C, bottom view of chassis, showing masking.

(2) Apply varnish immediately after the equipment is dry. If varnish is not applied immediately, moisture condenses on the equipment. Varnish applied over the moisture peels off readily after it dries.

(3) Use a brush to varnish components not reached by the spray gun.

g. Reassembly. (1) Remove all masking tape. Be careful not to peel varnish from nearby areas.

(2) Reassemble the receiver and test its operation.

h. Marking. Mark the letters MFP and the date of treatment at the right of the nameplate on the front panel of the receiver.

Example: MFP—8 Dec 47.

55. Power Supply Units RA-74-(*), RA-84-(*), and RA-94-A (figs. 22 and 23)

a. Preparation. Make all repairs and adjustments necessary for the proper operation of the power supply units.

b. Disassembly. (1) Remove the two screws holding the terminal strip cover to the chassis, and remove the cover.

(2) Loosen the 10 screws holding the cable to the terminal strip and remove the cable. Tighten the screws on the terminal strip.

(3) Remove the eight screws holding the front panel to the rack, and remove the power supply from the rack.

(4) Remove the eight knurled nuts and lockwashers holding the power supply cover to the front panel and chassis, and remove the cover.

(5) Remove the six screws holding the bottom cover to the chassis and remove the bottom cover.

c. Cleaning. Clean all dirt, dust, rust, and fungus from the equipment to be processed. Clean all oil and grease from the surfaces to be varnished.

d. Masking. Cover the following components with masking tape:

(1) Contacts of tube sockets (A and B, fig. 22).

(2) Terminals of connector cable (A and B, fig. 23).

ManualsPlus.com

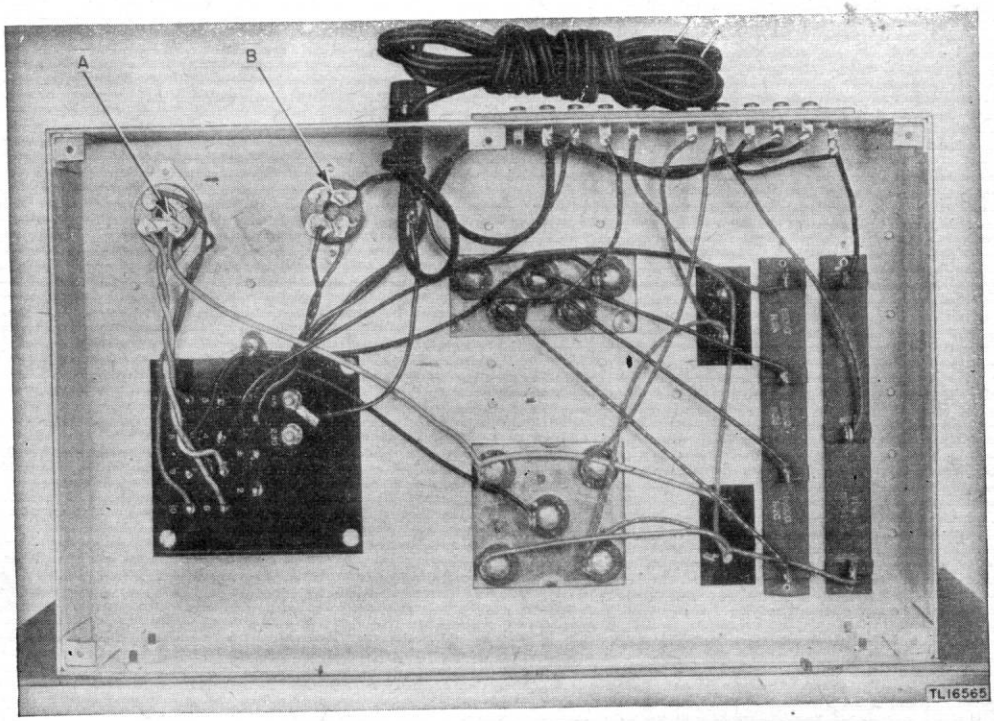

Figure 22. Power Supply Unit RA-94-A, bottom view of chassis, showing masking.

e. Drying. See paragraph 54*e*.

f. Varnishing. See paragraph 54*f*.

g. Reassembly. (1) Remove all masking tape. Be careful not to peel varnish from nearby areas.

(2) Reassemble the power supply unit and test its operation.

h. Marking. Mark the letters MFP and the date of treatment at the right of the nameplate on the front panel of the power supply unit.

Example: MFP—8 Dec 47.

56. Moistureproofing and Fungiproofing after Repairs

If, during repair, the coating of protective varnish has been punctured or broken, and if complete treatment is not needed to reseal the equipment, apply a brush coat to the affected part. Be sure the break is completely sealed.

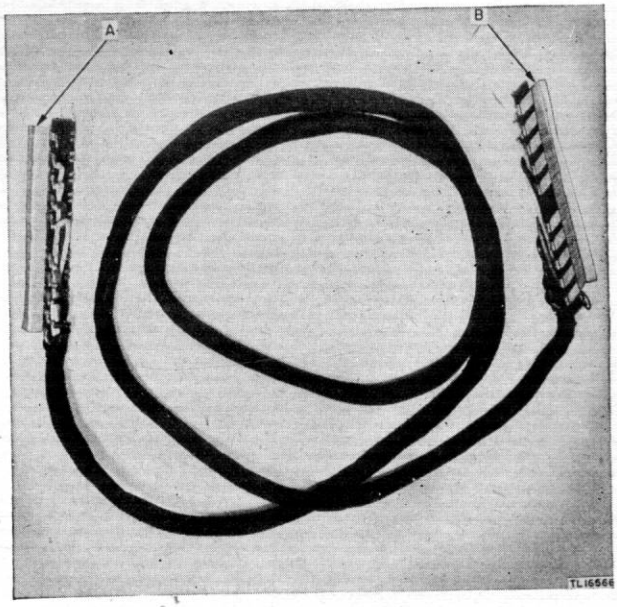

Figure 23. Connector cable, showing masking.

ManualsPlus.com

PART FOUR

AUXILIARY EQUIPMENT

(Not used.)

ManualsPlus.com

PART FIVE

REPAIR INSTRUCTIONS

Section X. THEORY OF RADIO RECEIVERS

57. General

Except for minor differences in the r-f, mixer, and high-frequency (h-f) oscillator circuits, Radio Receivers BC–779–(*), BC–794–(*), BC–1004–(*), and R–129/U are alike. The information in this section is based on the circuits of Radio Receiver BC–779–A, –B (fig. 56). Differences between the four receiver types are considered in the paragraphs on individual stages and in paragraph 10. For complete schematic diagrams refer to figures 56, 57, 58, and 59.

58. Block Diagram (fig. 24)

Radio Receiver BC–779–B is a superheterodyne receiver with two r-f stages, mixer, h-f oscillator, three i-f stages, a-v-c amplifier, a-v-c rectifier, detector, noise limiter, bfo, and three audio-frequency (a-f) stages. The r-f preselector stages provide image frequency rejection, as well as gain ahead of the mixer to improve the signal-to-noise ratio of the receiver. In the mixer the r-f amplifier output is combined with that of the h-f oscillator to produce the 465–kc intermediate frequency. The i.f. is amplified in the i-f stages and applied simultaneously to the detector and the a-v-c amplifier. The input to the first i-f stage includes a crystal filter to provide single-signal selectivity. The selectivity of the i-f amplifier is adjustable (par. 62). The detector output can be applied directly or through a noise limiter to the a-f amplifier. The a-v-c amplifier output is rectified and applied as a-v-c voltage to both r-f and first two i-f stages. For the reception of c-w signals the bfo provides an output which beats with the i-f signal to produce an audio-tone output signal. A push-pull arrangement is used in the output stage of the a-f amplifier. The output transformer has two output windings. A 600-ohm output is provided for use when moderate or maximum power is required for the operation of a loudspeaker, recorder, or for a 600-ohm audio transmission line. An 8,000-ohm output is provided for headphone use.

59. R-F Amplifier (fig. 25)

For simplicity, only the circuits for the 2.5- to 5.0-mc band are shown and the band switching arrangement is omitted from figure 25. The band switching circuits are discussed in paragraph 68.

a. First R-F Stage VI. A doublet antenna is connected through terminals A–A of terminal strip E1 to primary coil L3 of the r-f input transformer (L3, L8). (When a single-wire antenna is used, it is connected to one terminal A and the other terminal A is grounded.) The input impedance of the receiver is approximately 115 ohms. An electrostatic shield between L3 and L8 reduces capacitive coupling to a minimum. The input transformer secondary L8 is tuned by capacitors C1A, C2A, and

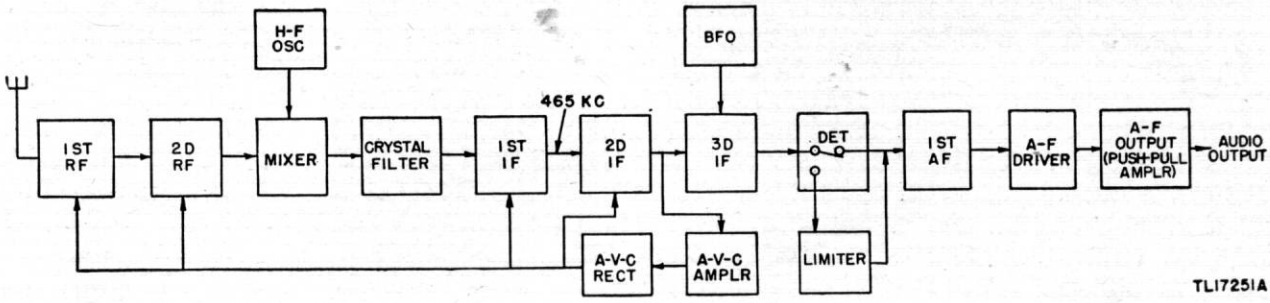

Figure 24. Radio Receiver BC–779–B, block diagram.

ManualsPlus.com

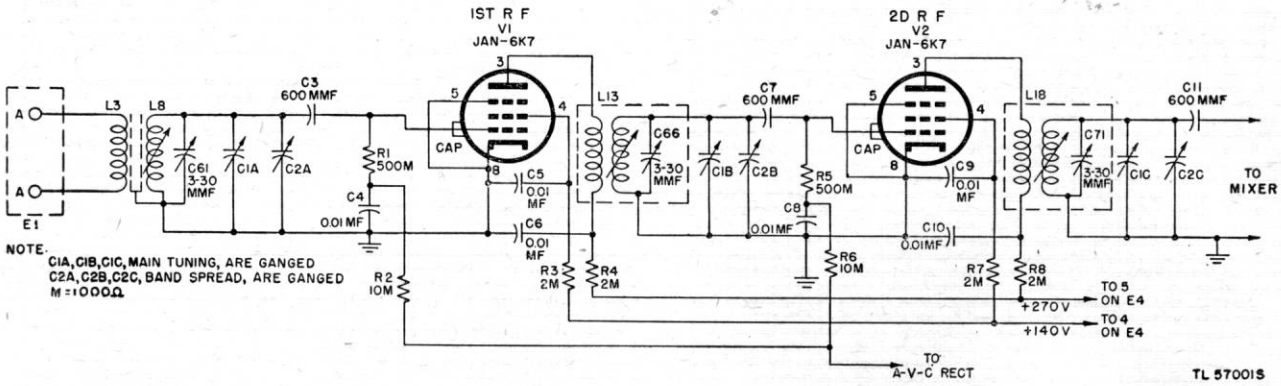

Figure 25. Radio Receiver BC–779–B, functional diagram of r-f amplifier.

C61. The 3- to 30-micromicrofarad (mmf) trimmer capacitor C61 enables alinement to the proper point on the h-f end of the calibrated main tuning dial. At the low frequency (l-f) end, alinement is accomplished by inductance trimming, that is, by adjusting the inductance of L8 by means of a copper disk on an adjusting screw in the coil form of L3. Capacitor C1A is the first section of the main tuning capacitor; capacitor C2A is the first section of the band spread tuning capacitor. Thus, with the main tuning control set for a given frequency, the band spread capacitor provides fine tuning and spreads a narrow frequency band over the entire band spread scale. Signal voltages across L8 are coupled through 600-mmf capacitor C3 to the control grid (top cap) of the first r-f Tube JAN–6K7. Bias voltage is shunt-fed through resistors R1 (500,000 ohms) and R2 (10,000 ohms) to the grid. Resistor R1 isolates signal voltages to the grid, and capacitor C3 blocks the bias voltage from the tuned circuit. A 0.01-microfarad (mf) capacitor C4 and resistor R2 act as a filter in the a-v-c line and have some effect on the time constant of the a-v-c circuit. Screen voltage is applied (from terminal 4 on terminal strip E4) through a decoupling circuit composed of 0.01-mf capacitor C5 and 2,000-ohm resistor R3. Plate voltage is applied (from terminal 5 on E4) through a SEND-REC switch (SW2, fig. 57), a decoupling circuit (2,000-ohm resistor R4 and 0.01-mf capacitor C6), and the primary winding of r-f transformer L13. The primary of L13 is untuned; the secondary, which is inductance trimmed, is tuned by the 3- to 30-mf trimmer capacitor C66, the second section of the main tuning capacitor C1B, and the second section of the band spread tuning capacitor C2B.

b. Second R-F Stage V2. A Tube JAN–6G7 is also used in the second r-f stage. Signal voltages from the secondary of L13 are coupled through a 600-mmf capacitor C7 to the grid. As in the preceding stage bias voltage is shunt-fed to the grid; R5 (500,000 ohms) isolates the signal to the grid, and capacitor C7 prevents the bias voltage from being shorted to ground through L13. The a-v-c decoupling circuit consists of 10,000-ohm resistor R6 and 0.01-mf capacitor C8. Capacitor C9 (0.01 mf) and the 2,000-ohm resistor R7 form a screen decoupling circuit. Similarly, the 0.01-mf capacitor C10 and 2,000-ohm resistor R8 decouple the r-f plate circuit from the power supply. Plate voltage is applied through the primary of L18. The plate winding (primary) of L18 is untuned. The secondary of L18 is tuned by a 3- to 30-mmf trimmer capacitor C71, a third section (C1C) of the main tuning capacitor, and a third section (C2C) of the band spread tuning capacitor. The r-f output voltage is applied through 600-mmf capacitor C11 to grid No. 1 (signal grid) of mixer Tube JAN–6L7, V3.

c. Differences in R-F Circuits. (1) *Plate supply.* In Radio Receivers BC–779–(*), BC–1004–(*), and R–129/U, plate voltage is series-fed through resistance-capacitance (R–C) decoupling circuits and the r-f transformer primaries (fig. 25). In Radio Receiver BC–794–(*) plate voltage is shunt-fed by means of choke L35 and 300-mmf capacitor C57 in the first stage, and choke L36 and 300-mmf capacitor C58 in the second stage (figs. 26 and 57). This method was chosen to keep plate voltage off the tuned impedance interstage coupling circuits L49, C99, and L50, C100, of the 20-40-mc band. Decoupling filters R4, C6, and R8, C10, are not included.

(2) *L6 and L11 coil assemblies.* In Radio Receiver R–129/U (fig. 59) an 11-mmf capacitor has

ManualsPlus.com

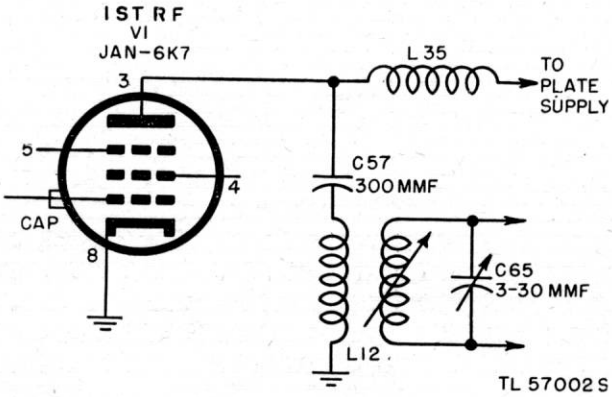

Figure 26. Radio Receiver BC-794-B, functional diagram of 1st r-f stage.

been added to coil assemblies L6 and L11 for the 300- to 540-kc band.

(3) *Selectivity controlling resistors.* In Radio Receivers BC-1004-(*) and R-129/U 20-ohm selectivity controlling (or damping resistors) R57 and R58 are used on the 540- to 1,160-kc band in the tuned input circuits of the second r-f and mixer stages (fig. 58). This additional resistance reduces the Q of the r-f transformers, resulting in less sideband cutting, especially at the l-f end of the band.

60. Mixer and H-F Oscillator (fig. 27)

a. Mixer Tube JAN-6L7. For simplicity, capacitor C71, main tuning ganged capacitor C1C, and band spread ganged capacitor C2C are represented as a single variable capacitor C across the inductance trimmed secondary of r-f transformer L18. Signal voltages across C are applied through 600-mmf capacitor C11 to signal grid G1 (top cap) of pentagrid mixer Tube JAN-6L7. Fixed bias from the voltage divider (fig. 31) is applied through a filter circuit (10,000-ohm resistor R10 and 0.01-mf capacitor C12) and 500,000-ohm grid resistor R9 to the signal grid. Screen grid G2 and G4 (pin 4) forms a screen about injection grid G3 (pin 5), and the h-f oscillator output is coupled through 95-mmf capacitor C13 to the injection grid. Since the screen grid shields the signal and injection grids from one another, the tube electron stream is modulated independently by the r-f and oscillator signals. Heterodyne action produces sum and difference frequencies in the mixer output. The primary of transformer T1 is tuned by C21 to the 465-kc *difference* frequency to which the i-f amplifier is also tuned. The i-f voltage across the secondary winding of transformer T1 is applied to the crystal filter.

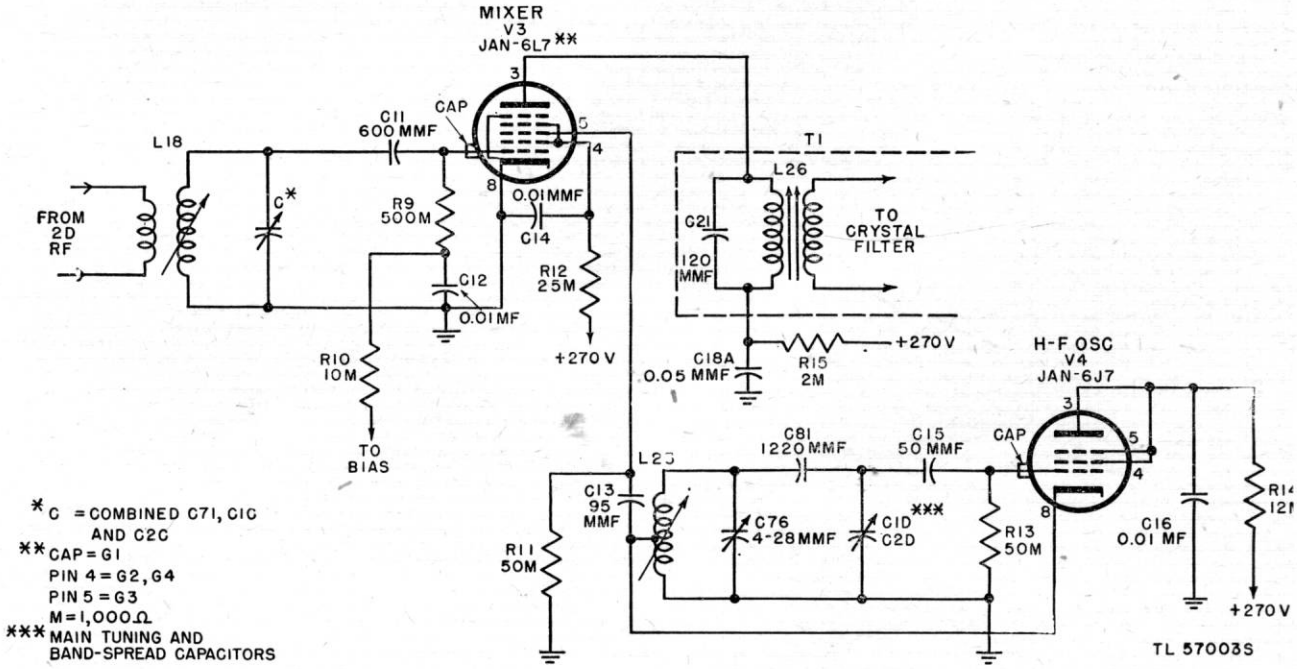

Figure 27. Radio Receiver BC-779-B, functional diagram of mixer and h-f oscillator stages.

ManualsPlus.com

b. H-F Oscillator Tube JAN–6J7. The plate (pin 3), suppressor grid (pin 5), and screen grid (pin 4) of Tube JAN–6J7 are tied together and the tube is used as a triode in a Hartley oscillator circuit. The h-f oscillator operates at a frequency exactly 465 kc higher than that of the received signal except as in *c*(1) below. Plate voltage is shunt-fed by means of a 12,000-ohm resistor R14 and a 0.01-mf capacitor C16. Resistor R14 isolates r-f energy to the oscillating circuit, and capacitor C16 couples the plate to the tank circuit. The cathode is connected to a tap on tank inductance L23. Consequently, tube current passes through a portion of the tank inductance and excites the tank circuit into oscillation. Grid excitation is obtained from the upper (larger) section of tank coil L23 and coupled to the grid (top cap) of V4 by 1,220-mmf capacitor C81, and 50-mmf capacitor C15. Oscillator bias is developed by the grid-leak capacitor combination 50,000-ohm resistor R13 and capacitor C15. The frequency of oscillation is a function of the inductance of L23 and the effective capacitance of capacitors C76, C81, C1D, and C2D. Capacitor C76 is a 4- to 28-mmf trimmer which enables alinement at the h-f end of the main tuning dial; the inductance trimming adjustment of L23 is used for alinement at the l-f end; capacitor C81 is a fixed 1,220-mmf i-f padder; capacitor C1D is the oscillator section of the ganged main tuning capacitor; and capacitor C2D is the oscillator section of the ganged band spread tuning capacitor. The r-f voltage between the tank tap and ground is coupled through 95-mmf capacitor C13 to the injection grid of mixer Tube JAN–6L7. The 50,000-ohm resistor, R11, acts as a grid leak for the injection grid of the mixer tube.

c. Differences in Mixer and H-F Oscillator Circuits. (1) In Radio Receiver BC–794–B a fixed series capacitor (l-f padder) is not used with 20- to 40-mc band coil L51 (fig. 57) and the oscillator is 465 kc *below* the signal frequency.

(2) In Radio Receiver BC–779–B variable padding capacitors C86 and C87 (fig. 56) are used in parallel with the fixed padders for the 100- to 200-kc and the 200- to 400-kc frequency bands. C86 and C87 are used instead of inductance trimming on oscillator coils L24 and L25. Variable padding capacitors are not used on any other frequency bands.

(3) In Radio Receiver R–129/U (fig. 59) an 11-mmf capacitor has been added to mixer grid coil assembly L16 for the 300- to 540-kc band, and a 50-mmf capacitor has been added to the h-f oscillator coil assembly, L21. The capacitance of C79 is changed from 4,800 mmf to 190 mmf.

(4) Refer to appendix III for circuit details of Improvement Kit MC–531.

61. Crystal Filter (fig. 28)

a. Equivalent Crystal Circuit. The equivalent electrical circuit of a crystal is shown in "A," figure 28. The circuit, and hence the crystal, are resonant at two frequencies: The frequency at which the reactance of L is equal to the reactance of C (series resonance), and the frequency at which the effective reactance of L–C (in series) is *inductive* and *equal* to the capacitive reactance of C_Y (parallel resonance). At the series-resonant frequency the crystal acts as a low-impedance connection between 1 and 2. At the parallel-resonant frequency the crystal acts as a high impedance between 1 and 2.

b. Basic Filter Circuit ("B," fig. 28). Capacitors C22 and C23 (100 mmf each) are connected in series across the secondary of i-f input transformer L26, and their junction is grounded to provide a midpoint connection in the resonant circuit L26–C22–C23. Consequently, the capacitor voltages are always of equal amplitude but 180° out of phase. Phasing capacitor C35 (1.5 to 5 mmf) is connected between 3 and 2, and the crystal is connected between 1 and 2.

c. Neutralization of C_Y. Capacitors C22, C23, C35, and C_Y (the capacity between the crystal holder plates) form a capacity bridge; the input is applied to 1 and 3, the output is taken from 2 and G. When capacitor C35 is adjusted so that its capacitance is equal to that of C_Y, the voltage coupled from 3 through C35 to 2 is equal and opposite to the voltage coupled from 1 through C_Y to 2. Under this condition C_Y is neutralized and the crystal acts as a series-resonant circuit only ("C," fig. 28). Since the crystal is resonant at the intermediate frequency, there is (in effect) a direct connection between 1 and 2. As indicated in "C," figure 28, only the voltage across C22 (one-half the secondary voltage) is applied through the crystal to the grid circuit of the first i-f stage.

d. Underneutralization. When the capacitance of C35 is made smaller than that of C_Y, less voltage is coupled through C35 to point 2. C_Y is not neutralized. The crystal then goes into parallel resonance at a frequency slightly higher than its series-resonant frequency, this parallel-resonant frequency being determined by the effective inductive reac-

ManualsPlus.com

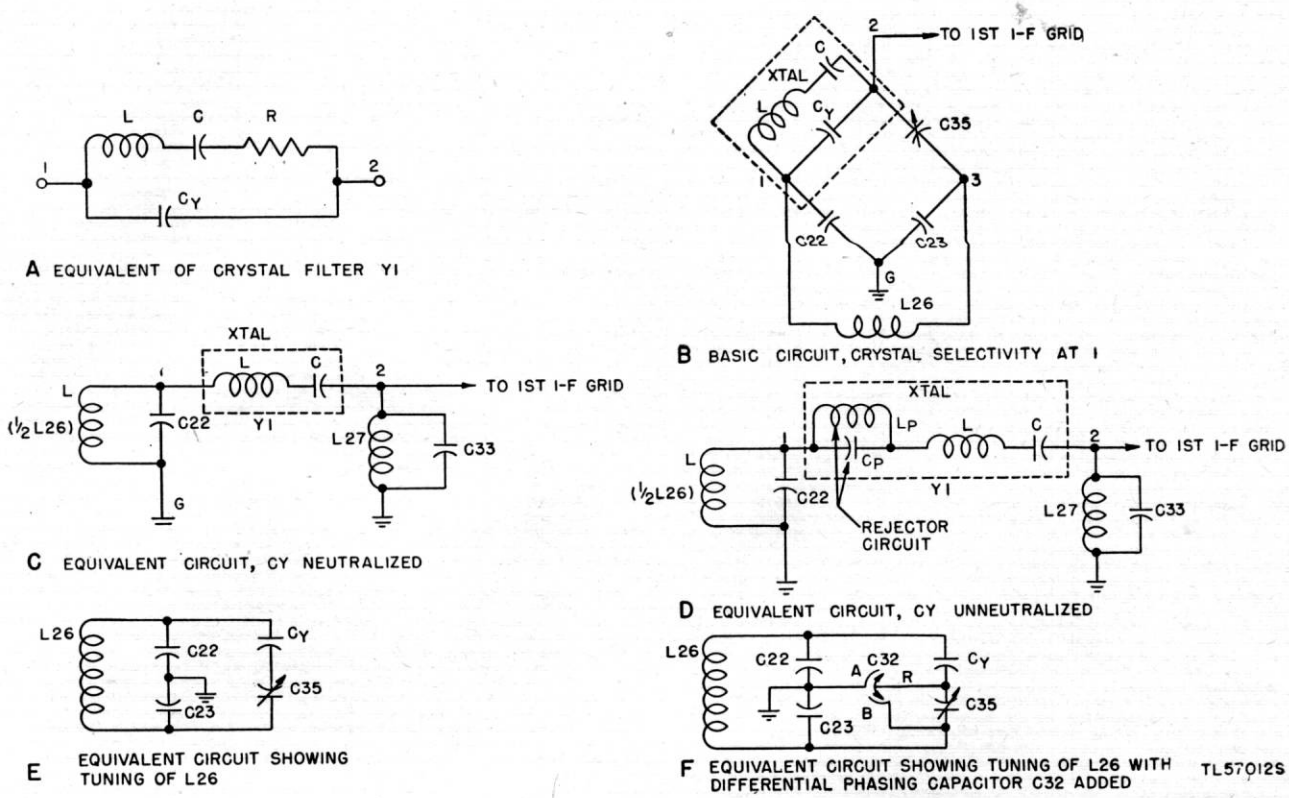

Figure 28. Radio Receiver BC–779–B, functional and equivalent diagrams of crystal filter circuit.

tance of L–C and the capacitive reactance of C_Y. For simplicity the parallel-resonant circuit is denoted as rejector circuit L_PC_P in "D," figure 28. L_P and C_P denote the effective inductance and capacitance at the parallel-resonant frequency. L and C indicate the effective inductance and capacitance of the crystal at the series-resonant frequency, in this case the 465-kc i.f. In other words, unless C_Y is neutralized, the crystal acts simultaneously as a parallel- and series-resonant circuit. The parallel-resonant circuit L_PC_P has no effect on the 465-kc i.f. but presents a high impedance to, and therefore rejects, the frequency to which L_PC_P is resonant. L and C present extremely low impedance to the 465-kc i-f signal voltage and high impedance to voltages at different frequencies. *With underneutralization the resonant frequency of L_PC_P is higher than 465 kc.*

e. Overneutralization. If the capacitance of C35 is made greater than that of C_Y, overneutralization occurs; that is, the voltage coupled from 3 to 2 exceeds that coupled from 1 through C_Y to 2. Under this condition, the voltage and phase relationships are such that the net reactance across C_Y is inductive. The crystal then goes into parallel resonance at a frequency slightly lower than its series-resonant frequency, the parallel-resonant frequency being determined by the effective capacitive reactance of L–C and the effective inductive reactance across C_Y. *With overneutralization the frequency of the parallel resonant circuit, shown as L_PC_P, is lower than 465 kc.*

f. Capacitor C32. Capacitor C35, in series with capacitance C_Y, is across L26 and affects its tuning ("E," fig. 28). To avoid the detuning effect and to enable shifting the rejection frequency to either side of the i.f., differential PHASING capacitor C32 ("F," fig. 28) is used in the radio receiver. Stator sections A and B are so arranged that, as rotor R is turned out of one stator into the other, the capacitance of the first *decreases* by the same amount that the capacitance of the second *increases*. Thus, whether the rotor is entirely engaged in stator A, is at a midpoint, or is entirely in stator B, the effective capacitance across A–B, and therefore across L26, remains constant. Assume that C32, the PHASING capacitor, is set at the arrow position of the PHASING control on the front panel and

ManualsPlus.com

that C35 is adjusted to neutralize C_Y. At the arrow position, the capacitance of A–R is equal to that of B–R. If the rotor is turned into stator A, the capacitance B–R across C35 is reduced. Consequently, the effective neutralizing capacitance is reduced and the rejection circuit (*d* above) becomes effective. When the rotor is turned into stator B, the neutralizing capacitance is increased and overneutralization occurs (*e* above). In practice the rejection frequency can be moved to any point from a few hundred cycles to several thousand cycles on either side of the i.f.

g. Circuit Differences. The crystal filter is identical in all the receivers.

62. I-F Amplifier (fig. 29)

a. Input Stage Tube JAN–6K7 (V5). (1) *CRYSTAL SELECTIVITY switch at OFF.* With the CRYSTAL SELECTIVITY switch, SW7, at OFF, the crystal filter is shorted. Consequently, the i-f signal is applied directly from input transformer L26 to the parallel-resonant grid circuit (permeability-tuned inductor L27 and 85-mmf capacitor C33) and to the control grid (top cap) of V5. C34 places the lower end of L27 at r-f ground potential. Grid bias is applied from the a-v-c line (par. 65) through 10,000-ohm decoupling resistor R46 which is bypassed by 0.01-mf capacitor C34. Plate (pin 3) voltage is applied through 2,000-ohm decoupling resistor R17 and primary winding L28 of interstage transformer T2. L28 is tuned by 100-mmf capacitor C36, and 0.05-mf capacitor C19A is a decoupling capacitor which brings the low end of L28 to r-f ground potential. The suppressor grid and cathode are grounded. Screen (pin 4) voltage is applied through 2,000-ohm decoupling resistor R16, and the screen is bypassed by 0.05-mf capacitor C18C. The inductive coupling between primary L28 and secondary L29 of T2 can be varied by adjusting the front panel BAND WIDTH control. The secondary of T2 is tuned by 100-mmf capacitor C37. I-f output is taken from a (low-potential point) tap on the secondary of T2 and applied to the control grid of the 2d i-f stage Tube JAN–6SK7 (V6).

(2) *CRYSTAL SELECTIVITY switch at 1.* When CRYSTAL SELECTIVITY switch SW7 is placed at 1, the short is removed from the crystal. If the secondary of L26 and the parallel-resonant grid circuit, L27–C33, are tuned to 465 kc, each is the equivalent of a high resistance in *series* with the equivalent series-resonant circuit of the crystal ("C," fig. 28). Consequently, the Q and therefore the selectivity of the series-resonant (crystal) filter circuit is reduced, and the bandwidth is several kilocycles wider than that of the crystal *alone.*

(3) *CRYSTAL SELECTIVITY at 2, 3, 4, or 5.* Advancing the CRYSTAL SELECTIVITY switch

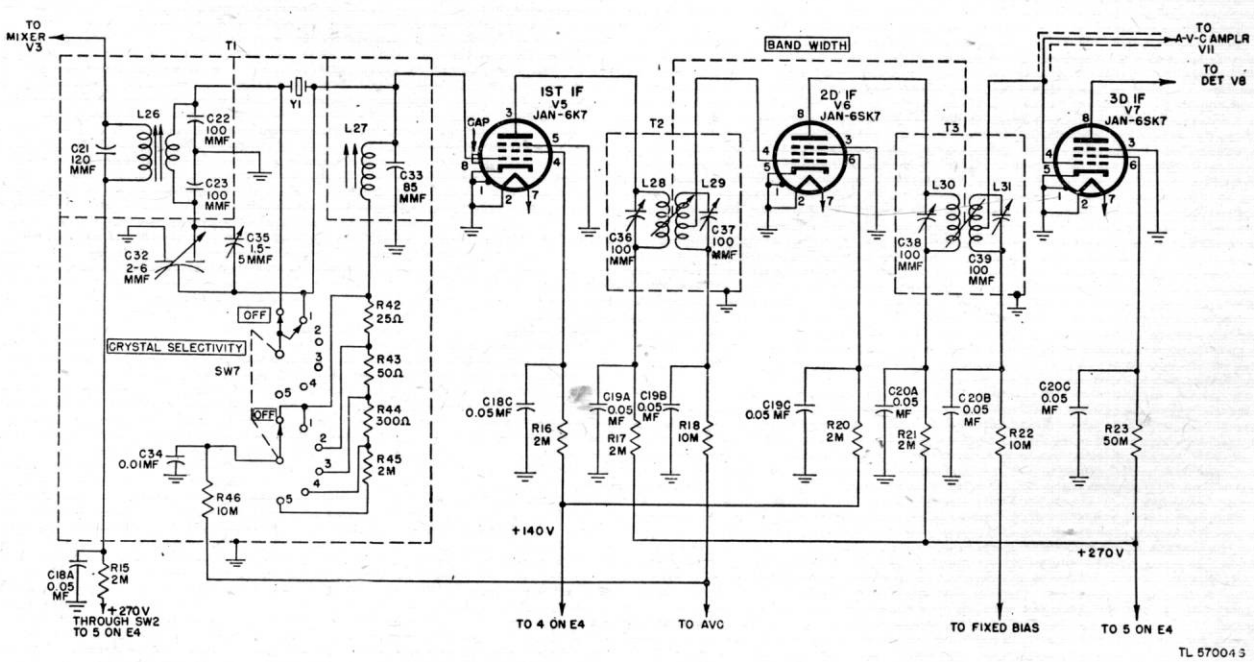

Figure 29. Radio Receiver BC–779–B, functional diagram of i-f amplifier.

ManualsPlus.com

to 2 places 25-ohm resistor R42 in series with L27 and C33 in the parallel-resonant grid circuit. The additional resistance, R42, reduces the Q and the *effective* resistance of tuned circuit L27–C33, *thereby reducing the total resistance in series with the crystal.* Under this condition the Q, and therefore the selectivity, of the filter circuit *increases.* As the CRYSTAL SELECTIVITY switch is advanced through 3, 4, and 5, resistors R43 (50 ohms), R44 (300 ohms), and R45 (2,000 ohms) are added successively in series with L27. Consequently, the *effective* resistance of tuned circuit L27–C33 is reduced in successive steps, the Q of the crystal filter circuit is correspondingly increased, and the selectivity of the filter circuit approaches the selectivity of the crystal alone.

b. 2D I-F STAGE TUBE JAN–6SK7 (V6). The i-f output of T2 is applied from a tap on L29 to the control grid (pin 4) of 2d i-f stage Tube JAN–6SK7. The suppressor and cathode are grounded. Bias voltage is obtained from the a-v-c line and is series-fed through decoupling resistor R18 (10,000-ohms) and L29 to the control grid. The low-potential end of L29 is grounded (at rf) through 0.05-mf capacitor C19B, which also prevents the bias from being shorted to ground. Screen voltage is obtained from the power supply unit and applied through 2,000-ohm decoupling resistor R20. The screen (pin 6) is bypassed by 0.05-mf capacitor C19C. Plate voltage is applied through 2,000-ohm decoupling resistor R21 and the primary winding of interstage transformer T3. The primary L30 of interstage transformer T3 is tuned by 100-mmf trimmer capacitor C38. The low-potential end of L30 is grounded (at rf) through 0.05-mf capacitor C20A, which also prevents the plate voltage from being shorted to ground.

c. 3D I-F STAGE TUBE JAN–6SK7 (V7). The secondary L31 or T3 is tuned by 100-mmf capacitor C39. The coupling between L30 and L31 is adjustable and controlled by means of the front panel BAND WIDTH control. This control also varies the coupling between L28 and L29 as indicated above. Thus the selectivity of the first two interstage transformers (T2 and T3) is adjusted simultaneously whenever the BAND WIDTH control is varied. The i-f output signal is taken from a tap on L31 and applied simultaneously to the control grid (pin 4) of V7 and to the a-v-c amplifier stage Tube JAN–6SK7 (V11). The suppressor and cathode (V7) are grounded. Bias is obtained from a tap on the fixed bias divider (par. 65*d*) and series-fed through 10,000-ohm resistor R22 and L31. Capacitor C20B (0.05 mf) bypasses the low-potential end of L31 to ground, but prevents the bias voltage from being shorted to ground. Screen voltage is applied through 50,000-ohm series dropping resistor R23; the screen is bypassed by 0.05-mf capacitor C20C. Plate voltage is applied through 2,000-ohm decoupling resistor R47 (fig. 30) and the primary winding of L32. The primary of L32 is tuned by 100-mmf capacitor C40. The 0.01-mf capacitor C43 bypasses h-f components to ground.

d. CIRCUIT DIFFERENCES. The i-f amplifier is identical in all the receivers.

63. Detector (fig. 30)

a. The signal voltages across the untuned secondary of i-f output transformer L32 are applied to diode detector Tube JAN–6H6 (V8). The two diode sections are connected in parallel and the tube acts as a half-wave rectifier. The diode load is composed of 100,000-ohm resistor R48, 75,000-ohm resistor R24, 50,000-ohm resistor R25, and 250,000-ohm resistor R30 in series between L32 (point A) and the cathode of V8 (point C). The entire load resistance is bypassed by 50-mmf capacitor C44 which acts as an r-f filter. Two additional 50-mmf capacitors, C45 and C26, also provide r-f filtering. The rectified diode current passes through the load resistance, and the load voltage variations are a function of the modulation of an incoming signal. The voltage across R25 is taken as output voltage and applied to 250,000-ohm AUDIO GAIN potentiometer R26 (fig. 33).

b. Detector stage V8 is identical in all the receivers.

64. Noise Limiter (fig. 30)

a. LIMITER CIRCUIT. The triode sections of Tube JAN–6N7 (V9) are connected in parallel to form a single triode (fig. 30) which is used as a shunt-type limiter. The heater voltage is reduced to approximately 3 volts by 4-ohm series resistor R31 (fig. 56). The control grids (pins 4 and 5) are connected to 0.05-mf capacitor C42, which is grounded at one end, and through 1-megohm (meg) resistor R49 to the most negative point (A) on the diode resistance. The cathode (pin 8) is connected through LIMITER OFF-ON switch SW5 to a point of higher potential (B) with respect to point (A), and the plates (pins 3 and 6) are connected to the point of highest potential (C)

ManualsPlus.com

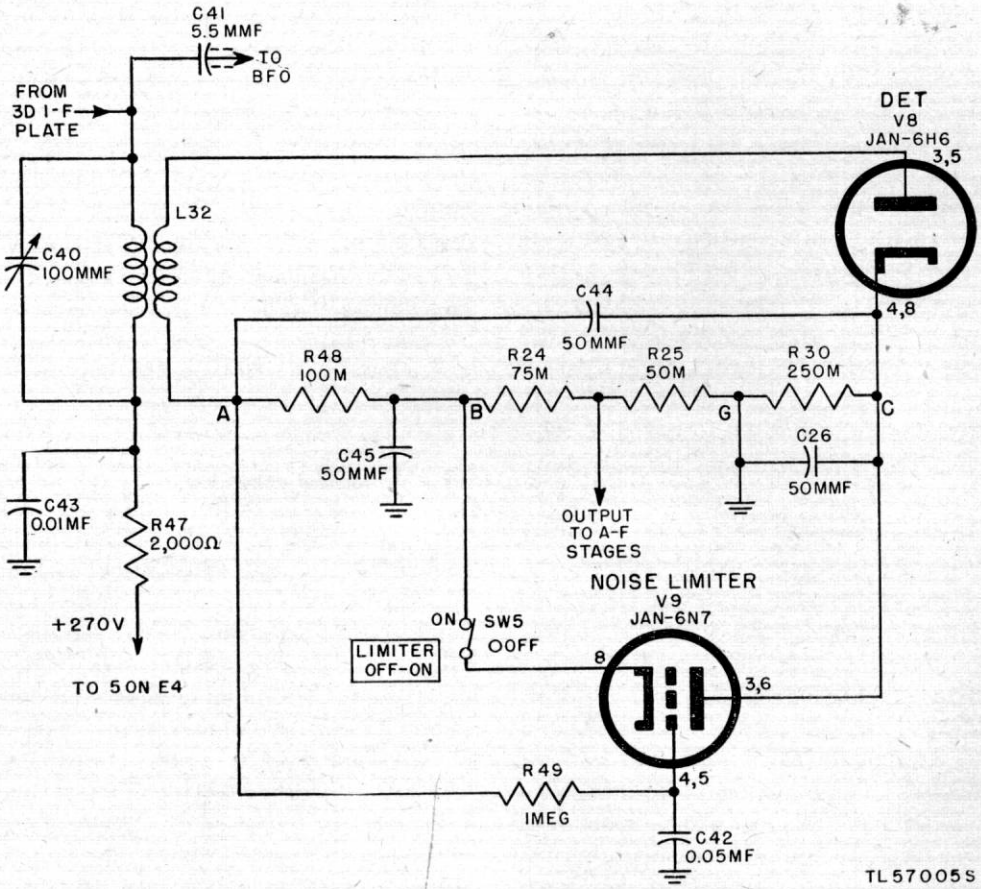

Figure 30. Radio Receiver BC-779-B, functional diagram of detector and noise limiter stages.

with respect to point (A). Thus, with the LIMITER OFF-ON switch at ON, the voltage drop between points B and C is the plate-to-cathode voltage of limiter Tube JAN-6N7.

b. LIMITER OPERATION. (1) *Development of bias.* When a signal of constant amplitude is received, the average (that is, the d-c) voltage between B and C, which is also the limiter plate-to-cathode voltage, remains constant. Similarly, the voltage drop between A and G remains constant and charges capacitor C42 through R49. For a given signal level the grids are held at a potential more negative than the cathode by the voltage drop across resistor R48. This voltage drop, which is applied as bias to the grid, and the plate-to-cathode voltage are so proportioned that the tube is biased to or beyond cut-off. Consequently, the limiter tube has no effect on the input signal.

(2) *Noise reduction.* Assume that a constant amplitude signal is received and that a very short noise pulse voltage of high amplitude is superimposed on the signal. The noise pulse causes an increased detector current and, hence, an increased voltage drop across the diode load resistance. As the plate and cathode are connected to points B and C, the plate-to-cathode voltage of the limiter is increased. Although there is also a corresponding increase of the negative voltage at A, the grid is *not* made more negative. Because of the 0.05-second time constant of R49–C42, capacitor C42 cannot charge and/or discharge rapidly enough to follow instantaneous voltage changes at point A. The cathode, however, becomes more negative because of the increased drop across resistors R24 and R25. If the noise pulse is a strong one, the cathode will be negative with respect to the grid. This positive bias in conjunction with the increased plate-to-cathode voltage causes current flow through the noise limiter tube. The limiter is then the equivalent of a low-resistance (approaching a short circuit) shunt from B to C on the detector load resistance. As this condition starts at the point where the noise pulse amplitude begins to exceed the signal amplitude, the peak of the

ManualsPlus.com

noise pulse is clipped and the noise output cannot become much greater than the signal output. (With the noise amplitude held to a level only slightly greater than the signal, an operator can read signals that would be unreadable without the limiter.) Immediately following the pulse, the original bias voltage across resistor R48 again biases the limiter, and normal reception is restored quickly. In practice the limiter is effective in reducing the effect of noise pulses, such as those produced by the ignition system of an automobile. If the amplitude of the noise pulse is lower than the signal amplitude, the limiter has no effect. In other words, the limiter can only prevent the noise output from rising appreciably above the signal output.

(3) *Changes in signal amplitude.* The limiter stage will affect signals, such as amplitude-modulated voice and music transmissions, which contain amplitude changes. Increases of amplitude above the average level cause the same action that is produced by noise pulses and, therefore, the limiter distorts the signal by clipping the peaks. Clipping and, hence, the distortion may increase considerably if the degree of modulation is high.

(4) *Changes of average signal amplitude.* The time constant of R49–C42 is long enough to prevent bias changes when noise pulses are received. The time constant is short enough, however, to enable automatic readjustment of the bias (voltage of C42) when the average amplitude of the signal changes. For example, if the level of the received signal increases or decreases because of fading, or if the receiver is tuned to a signal of given amplitude and retuned quickly to a stronger or to a weaker signal, the charge of C42 readjusts itself for proper operation under the new conditions.

c. Circuit Differences. The noise limiter stage is identical in all the receivers.

65. A-V-C Circuit (fig. 31)

An a-v-c circuit which is independent of the detector provides improved a-v-c action. In Radio Receiver BC–779–B the separate a-v-c circuit consists of an a-v-c branch i-f amplifier Tube JAN–6SK7 (V11) and an a-v-c rectifier Tube JAN–6H6 (V12). The rectified and filtered output of V12 is applied as a-v-c voltage to both r-f stages and to the first two i-f stages.

a. A-V-C Amplifier Tube JAN–6SK7 (V11). The output of the 2d i-f stage, V6, is applied simultaneously to the 3d i-f stage, V7 (fig. 29), and to the control grid (pin 4) of the a-v-c amplifier stage V11 (fig. 31). V7 and V11 have a common grid circuit, including fixed bias. The suppressor and cathode of V11 are grounded; screen voltage is applied to pin 6 through 50,000-ohm series-dropping resistor R37; and the screen is bypassed by 0.05-mf capacitor C29. Plate (pin 8) voltage is applied through 2,000-ohm filter resistor R51 and the primary of transformer L34. The primary of L34 is tuned to 465 kc by 100-mmf capacitor C51, and capacitor C53 (0.01-mf) bypasses high frequencies to ground. The transformer secondary is untuned.

b. A-V-C Rectifier Tube JAN–6H6 (V12). The secondary voltage across L34 is applied to a-v-c rectifier Tube JAN–6H6, the two diode sections of which are connected in parallel to form a single half-wave rectifier. The diode (or rectifier) load is composed of 25,000-ohm resistor R53, 5,000-ohm resistor R54, 5,000-ohm resistor R55 and 1,000-ohm variable resistor R41. A 0.005-mf capacitor (C52), across the load, and 0.01-mf capacitors C54 and C55 filter the rectifier output.

c. S-Meter. When AVC-MANUAL switch SW4 is at AVC, the 0- to 200-microampere meter M1 is connected across the 1,000-ohm calibration resistor R41. The meter reading is a measure of the rectified current through the load. However, the meter is calibrated as a signal strength meter (S-meter). By adjusting R41 and S9 reading may be obtained on an input between approximately 10 and 10,000 microvolts. At the factory R41 is usually adjusted to produce a reading of S9 on a 50-microvolt signal at 3.5 mc. When so adjusted, a change of one S number on the meter indicates a change in signal strength of approximately two to one. The SENSITIVITY control R56 must be turned full on (10). When the S-meter is used for tuning, the BAND WIDTH control must be set at 3 for maximum accuracy. The S-meter is disconnected from the diode load circuit when the AVC-MANUAL switch is at MANUAL.

d. Bias Voltage Divider. Fixed bias voltage is obtained from the power supply (par. 71*d*) and applied to a voltage divider composed of 3,000-ohm resistor R40, 1,700-ohm resistor R39, and 300-ohm resistor R38. The voltage drop across 300-ohm resistor R38, bypassed by 0.25-mf capacitor C30, is applied as fixed bias to the mixer and 3d i-f stages. A 50,000-ohm SENSITIVITY control, R56, is connected across the series combination of R40 and R39.

ManualsPlus.com

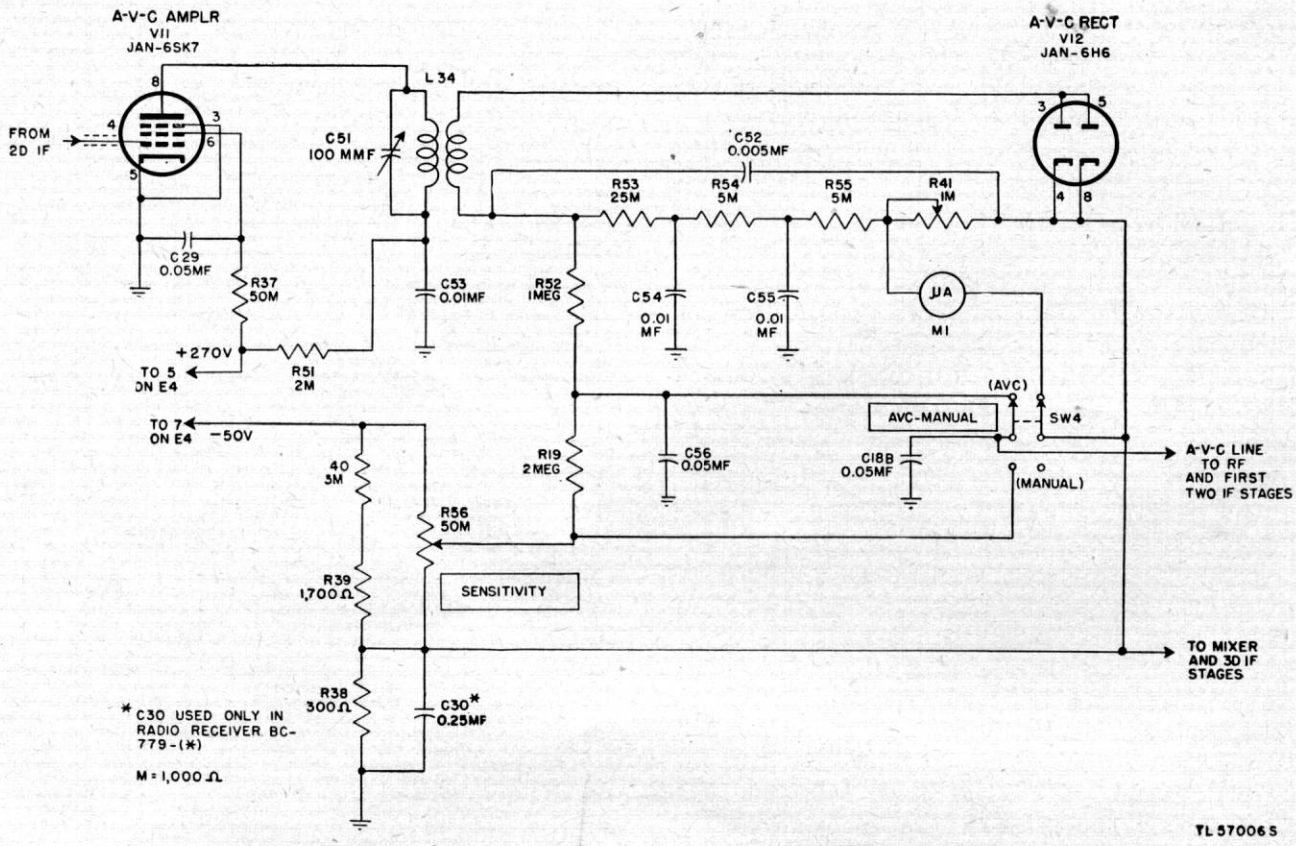

Figure 31. Radio Receiver BC–779–B, functional diagram of a-v-c stages.

e. A-V-C Operation. With the AVC-MANUAL switch at AVC, the a-v-c control voltage is obtained from the junction of R52 and R19 and applied to the r-f stages and the first two i-f stages through the AVC-MANUAL switch and the i-f filter consisting of 1-meg resistor R52 and 0.05-mf paralleled capacitors C56 and C18B. This resistor-capacitor combination establishes the time constant of the a-v-c circuit. The grid resistors and capacitors in the controlled r-f and i-f stages also affect the time constant. The 2-meg resistor, R19, provides an interconnection between the avc and the fixed bias circuit. The SENSITIVITY control can therefore be used to adjust the gain of the receiver during a-v-c operation. This feature is very helpful in a noisy location. When avc is used for c-w code reception, a longer time constant is desirable and is secured by adding a 0.25-mf capacitor C17 in parallel with C56 and C18B. This additional capacitor is connected to one pole of the SIGNAL MOD-CW switch, SW3 (fig. 32), which controls the beat oscillator. Therefore, when the beat oscillator is turned on for c-w code reception, capacitor C17 is automatically added to the a-v-c system.

f. Manual Operation. With the AVC-MANUAL, the a-v-c line is disconnected from the a-v-c rectifier output and connected directly to the contact arm of the SENSITIVITY control, R56. Bias is then applied to the two r-f stages and the first two i-f stages. The bias is adjusted by means of the SENSITIVITY control and filtered by capacitor C18B. The bias cannot be reduced below the voltage drop (3 volts) across R38, and this voltage is applied as fixed bias to the mixer and 3d i-f stages.

g. Circuit Differences. The a-v-c, bias supply, and S-meter circuits are identical in Radio Receivers BC–779–(*), BC–794–(*), BC–1004–(*), and R–129/U (figs. 56, 57, 58, and 59), except that Radio Receiver BC–1004–D does not contain sensitivity meter M1 and capacitor C30 is included only in Radio Receiver BC–779–(*).

ManualsPlus.com

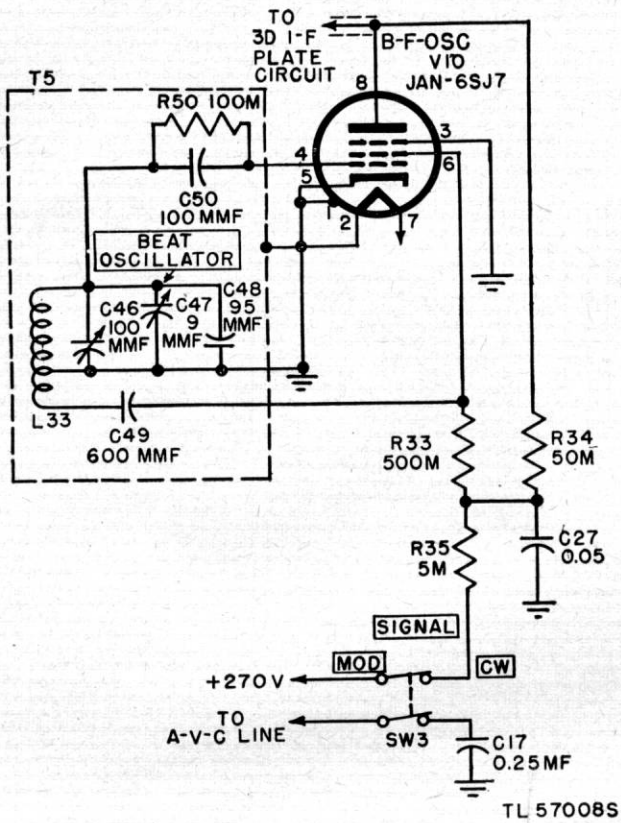

Figure 32. Radio Receiver BC–779–B, functional diagram of beat-frequency oscillator.

66. Beat Frequency Oscillator (fig. 32)

a. Beat frequency oscillator V10 uses Tube JAN–6SJ7 in a pentode-operated electron-coupled oscillator circuit. The cathode, control grid, and screen grid form a series-fed Hartley oscillator. The screen grid of the tube acts as the plate of the Hartley oscillator circuit. When the SIGNAL MOD-CW switch SW3 is in the CW position, screen and plate voltage are applied through decoupling circuit R35, C27, dropping resistor R33 and load resistor R34. R-f current is fed back to the grid tank circuit through capacitor C49 which also serves to prevent the B plus supply from being shorted to ground through L33. The frequency of the oscillator grid circuit, approximately 465 kc, is determined primarily by inductor L33 in parallel with variable capacitor C46 and fixed capacitor C48. C46 is used to place the oscillator at approximately 465 kc. BEAT OSCILLATOR capacitor C47 provides fine adjustment of the oscillator frequency. Grid leak bias is developed by R50 and C50. The r-f voltage across the grid circuit is electron-coupled to the plate circuit of V10, thus causing an amplified r-f voltage to appear across load resistor R34. Since the electron stream is the coupling medium between the oscillator and the load, and since the suppressor grid (pin 3), which is at r-f ground potential, serves as an electrostatic shield between the oscillator and the plate output circuits thus eliminating capacitive feedback, this type of oscillator is very stable.

b. The r-f voltage across R34, approximately 465 kc, is applied through capacitor C41 to the input circuit C40–L32 of detector stage V8 (fig. 30). This r-f voltage mixes in the detector with the 465-kc i-f signal from the 3d i-f tube, V7, resulting in a beat or difference frequency which is applied to the a-f stages of the receiver. By adjusting the BEAT OSCILLATOR control, C47, the pitch of this difference frequency can be controlled at will. Furthermore, the BEAT OSCILLATOR control may be set to obtain the desired difference frequency tone above or below the intermediate frequency, depending on the side which gives the more satisfactory reception. In addition to being necessary for proper reception of c-w code signals, the bfo is useful for locating weak signals of any kind. As indicated in paragraph 65*e*, capacitor C17 is connected in parallel with the a-v-c time constant determining capacitors C56 and C18 during a-v-c reception to increase the time constant when the bfo is being used for c-w code signals. When the SIGNAL MOD-CW switch, SW3, is in the MOD position, the bfo does not operate since the plate and screen supply is cut off. In this position the additional timing capacitor, C17, is disconnected from the a-v-c line, since it is required only for a-v-c c-w code reception.

c. The b-f-o stage is identical in all the receivers.

67. A-F Amplifier (fig. 33)

a. 1st A-F Stage. The audio output of the detector appearing across AUDIO GAIN potentiometer R26 is coupled by 0.02-mf capacitor C24 to the grid of the 1st a-f Tube JAN–6C5, V13. Grid bias is applied through 500,000-ohm grid coupling resistor R27 from the voltage divider composed of 300-ohm resistor R38, 1,700-ohm resistor R39, and 3,000-ohm resistor R40. The cathode and one side of the filament are grounded. Plate voltage is supplied through 50,000-ohm load resistor R28. The 0.25-mf capacitor, C31A, is the plate supply bypass.

b. A-F Driver Stage. The audio voltage across R28 is coupled by 0.05-mf capacitor C25 to the

ManualsPlus.com

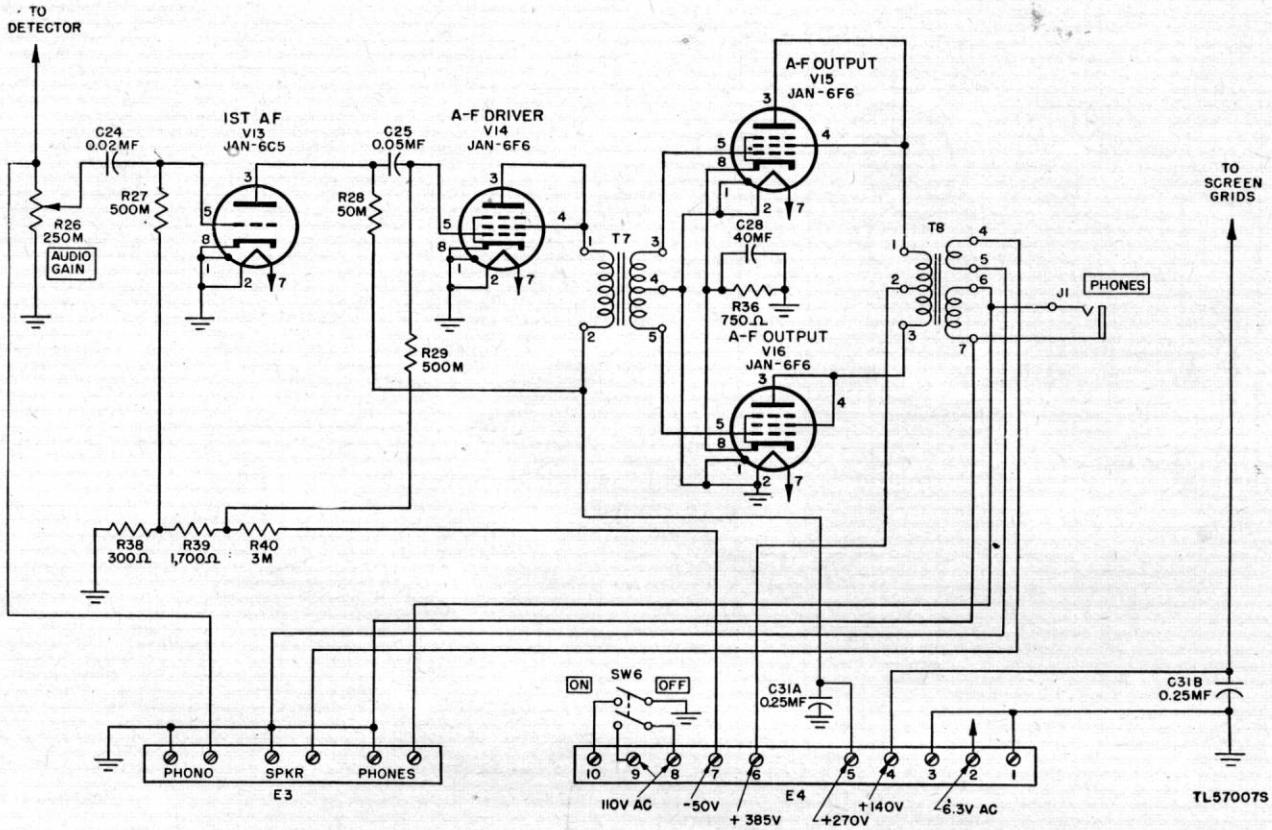

Figure 33. Radio Receiver BC-779-B, functional diagram of a-f amplifier stage.

grid of a-f driver Tube JAN-6F6, V14. Fixed bias from the voltage divider is applied through 500,000-ohm grid resistor R29. The cathode is grounded. V14 is operated as a triode by connecting its plate and screen together. Plate voltage is supplied through the primary winding of push-pull input transformer T7.

c. A-F Output Stage. (1) This stage is a push-pull arrangement using two pentode Tubes JAN-6F6, V15 and V16, connected as triodes. The grids are connected to terminals 3 and 5 of push-pull transformer T7. Center tap terminal 4 is grounded. Plate voltage is supplied through the primary of push-pull output transformer T8. Cathode bias is provided by the current flow through 750-ohm resistor R36 which is bypassed by 40-mf capacitor C28 to prevent degeneration. V15 and V16 are operated as class AB_2 amplifiers. This means that grid current flows during some part of the input cycle. For a power output up to approximately 3 watts no grid current flows, and harmonic distortion is negligible. Above 3 watts, and up to 10 watts (maximum output), grid current steadily increases, causing a corresponding increase in distortion.

(2) Output transformer T8 has two secondary windings: a 600-ohm secondary (4-5) for power output, and a secondary for headphones (6-7) designed to deliver about 3 percent of the output power into an 8,000-ohm resistive load when the 600-ohm secondary is connected to a matching load. The turns ratio and resistance of the headphone winding are such that the power delivered to any load between 8,000 ohms and 80 ohms varies less than 6 decibels, and the power input to a 250-ohm load is only 2 decibels greater than that to a 4,000-ohm load. The power output winding (4-5) is connected to the SPKR terminals on terminal strip E3, which is located at the rear of the receiver. The headphone winding (6-7) applies audio output to PHONES Jack J1 which is in parallel with the PHONES terminals on terminal strip E3. One side of each winding is grounded. The PHONO terminals on E3 provide a convenient means of using the a-f amplifier to amplify an audio-signal.

ManualsPlus.com

Volume can then be controlled by the AUDIO GAIN control, R26.

(3) Terminal strip E4 is connected to terminal strip E1 on the power supply unit by a connector cable. When the ON-OFF switch, SW6, is in the ON position, terminals 8 and 9 are shorted on both terminal strips E4 and E1, thus completing the primary circuit of the power supply unit input transformer, T1 (fig. 50). The various operating potentials are then applied through the connector cable to the receiver terminal strip E4.

d. CIRCUIT DIFFERENCES. The a-f amplifier is identical in all the receivers.

68. Band Switching Circuits

In the discussion of the r-f circuits of the receiver, only the tuned circuits for the 2.5- to 5.0-mc band were covered. Actually, each receiver has five bands. Four r-f stages are involved. With only one or two exceptions, the tuned r-f circuits consist of a low-inductance untuned primary and a tuned secondary in the grid circuits of the 1st r-f, 2d r-f, and mixer stages. The fourth r-f tuned circuit is the oscillator tank circuit. All four r-f tuned circuits are changed when the band is changed by the 10-pole, 5-position, 5-section band switch, SW–1A, SW–1B, SW–1C, SW–1D, SW–1E. Figure 56 shows the band switch in the 5- to 10-mc position for Radio Receiver BC–779–B. Note that the circuits in the four unused bands are automatically shorted out by the switch contacts. The frequency bands, which vary for the four receivers, are as follows:

BC–779–(*)	BC–794–(*)	BC–1004–(*)	R–129/U
100 kc-200 kc	1,250 kc-2,500 kc	540 kc-1,160 kc	300 kc-540 kc
200 kc-400 kc	2.5 mc-5 mc	1,160 kc-2,500 kc	540 kc-1,160 kc
2.5 mc-5 mc	5 mc-10 mc	2.5 mc-5 mc	1,160 kc-2,500 kc
5 mc-10 mc	10 mc-20 mc	5 mc-10 mc	2.5 mc-5 mc
10 mc-20 mc	20 mc-40 mc	10 mc-20 mc	5 mc-10 mc

69. Band Spread Circuits

a. To provide noncritical tuning without an unnecessary amount of dial twisting, the 4-section BAND SPREAD capacitor, C2A, C2B, C2C, C2D,

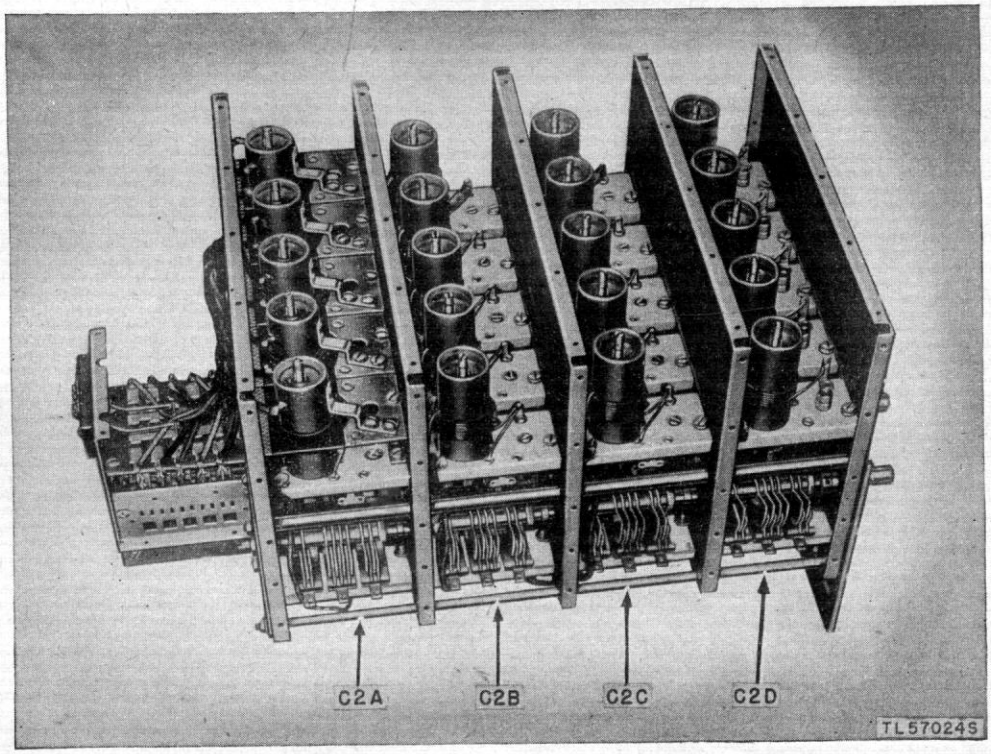

Figure 34. Radio receiver, tuning unit assembly.

ManualsPlus.com

is provided. One section is used in each of the four r-f stages (fig. 56). Each section, moreover, is further subdivided into three smaller sections so that effectively 12 band spread capacitors are provided (fig. 34). Each one of the three smaller capacitors in any one r-f stage is used for band spread in only one of the three higher frequency bands. The band switch automatically connects or disconnects these band spread capacitors. The unused band spread capacitors are shorted out. On the two lower frequency bands no band spread is provided since tuning is not too critical. The capacitance range of each of the three smaller sections in any one r-f stage differs since the tuned r-f circuits in each of the three bands require different values of band spread capacitance for satisfactory band spread characteristics.

b. The calibration of the main dial is based on a BAND SPREAD dial setting of 100. Decreasing the setting of the BAND SPREAD dial decreases the resonant frequency of the receiver. Band spread may therefore be obtained by setting the BAND SPREAD dial at 100 and the MAIN TUNING dial to the highest frequency which is desired to be covered with band spread action. When this has been done, a small portion of the adjacent lower frequency side of the band may be tuned by means of the BAND SPREAD dial only.

c. In Radio Receiver BC–794–(*) (fig. 57), the center one of the three smaller capacitors is always connected in the tuned r-f circuits. The other two capacitors are connected in the tuned r-f circuits in the 2.5- to 10-mc and 20- to 40-mc bands, respectively. Thus in Radio Receiver BC–794–(*) the BAND SPREAD control operates continuously throughout the entire tuning range of the receiver, and signals can be spread out in any one of its five bands.

d. In Radio Receiver R–129/U (fig. 59) the band spread has been removed from the 300- to 540-kc band.

Section XI. THEORY OF POWER SUPPLY UNITS AND BATTERY OPERATION

70. Differences in Models

Power Units RA–74–(*), RA–84–(*), and RA–94–A are electrically alike except for variations in power transformers T1, T2, and T3 (figs. 50, 51, and 52). The output of these transformers is the same, but the input requirements vary.

a. Power Unit RA–74–(*) operates from a 95-130-volt (v), 190-260-v, 25-60-cycle power source. The transformer primary is provided with eight taps marked 95, 105, 117, 130, 190, 210, 234, and 260.

b. Power Unit RA–84–(*) is designed to operate from a 105-115-125-v, 50-60-cycle power source. Three primary taps marked 105, 115, and 125 are provided.

c. Power Unit RA–94–A operates from a 115- or 230-v, 50-60-cycle power source. Two taps marked 115 and 230 are provided.

71. Circuit Details

a. An input transformer, T1, T2, or T3, is connected to the power source by 7-foot line cord W1 and is fused by 2-ampere (amp), 250-v fuse F1. Terminals 8 and 9 of terminal strip E1 are connected to terminals 8 and 9 of receiver terminal strip, E4 (fig. 33) by the connector cable. Closing receiver ON-OFF switch SW6 therefore completes the primary circuit of the transformer. The average power consumed is 180 watts.

b. The power unit furnishes filament, plate supply, and bias voltages to the receiver. The filament voltage, 6.3 v ac, is obtained from secondary winding 1-2 on the transformer and applied to the receiver through terminals 1 and 2 on the terminal strips (fig. 50, 51, or 52). Terminal 1 is grounded in the receiver.

c. Plate supply voltage is supplied by the plate supply rectifier Tube JAN–5Z3, V1, connected in a full-wave circuit. The plates are connected to terminals 7 and 10 of the high-voltage center-tapped secondary. The center tap, terminal 8, is grounded. Filament supply is provided by secondary winding 5-6. After the voltage is rectified, it is filtered by the capacitor input pi-section filter consisting of choke L1 and two 8-mf sections of filter capacitor C1. The filtered voltage, which is connected to terminal 6, provides approximately 385 v dc for the plates of a-f output tubes V15 and V16 in the receiver. Further filtering by second filter choke L2 and another 8-mf section of capacitor C1 provides approximately 270 v dc plate and screen supply at terminal 5. Approximately 140 v dc for screen grid supply is obtained from the tap on bleeder resistor R1, which is bypassed by the remaining 8-mf section of capacitor C1. This screen voltage is connected to terminal 4 on terminal strip E1.

ManualsPlus.com

d. Bias supply rectifier Tube JAN–80, V2, is used in a half-wave rectifier circuit to supply bias to the receiver. The filament is connected to tap 9 on the high-voltage secondary. The a-c voltage across the 8 and 9 windings of the high-voltage secondary is thus applied to V2. Since tap 8 is grounded, the plate of V2 is at a negative potential. Filament supply for V2 is furnished by winding 3-4. The rectified output of V2 is filtered by the three 8,000-ohm sections of resistor R2 and the four 3-mf sections of filter capacitor C2. When connected to the receiver, the voltage at the end of this filter, terminal 7 on E1, is approximately 50v negative.

e. Terminals 1 through 9 on terminal strip E1 are connected to terminals 1 through 9 on the receiver by the connector cable. Terminal 10 is not used for a-c operation. Terminal 3 is grounded in both the power supply unit and the receiver.

72. Battery Operation

a. Although primarily designed for a-c operation, in an emergency the receiver can be operated from a 6-v storage battery, five 45-v plate supply batteries, and a 45-v bias battery. The 7-foot connector cable which is supplied for battery operation is connected as shown in figure 35. One end of the cable is provided with a terminal strip which connects to the terminal strip on the receiver. Terminals 2 and 8 of the connector cable terminal strip are shorted.

b. The plate supply voltage is always applied to the receiver since the negative terminal of the series-connected batteries is grounded through terminal 3 and the positive terminal is connected to terminals 5 and 6. The 90-v screen supply, connected to terminal 4, is also always applied to the receiver. There are no bleeders in the receiver plate supply circuits so that no current is drawn when there is no filament voltage applied to the tubes.

c. The ON-OFF power switch, SW6, in the ON position turns on the receiver filaments and applies bias to the receiver. The negative end of the 6-v filament supply battery is grounded through terminal 1. The positive terminal of the battery is connected to the filaments through terminal 9, ON position of switch SW6, terminal 8, and the jumper to terminal 2.

d. The positive terminal of the bias supply battery is grounded through terminal 10 and the ON position of switch SW6. The negative 45-v terminal is connected to the receiver through terminal 7.

Section XII. TROUBLE SHOOTING

73. General

No matter how well equipment is designed and manufactured, faults occur in service. When such faults occur, the repairman must locate and correct them as rapidly as possible. This section contains

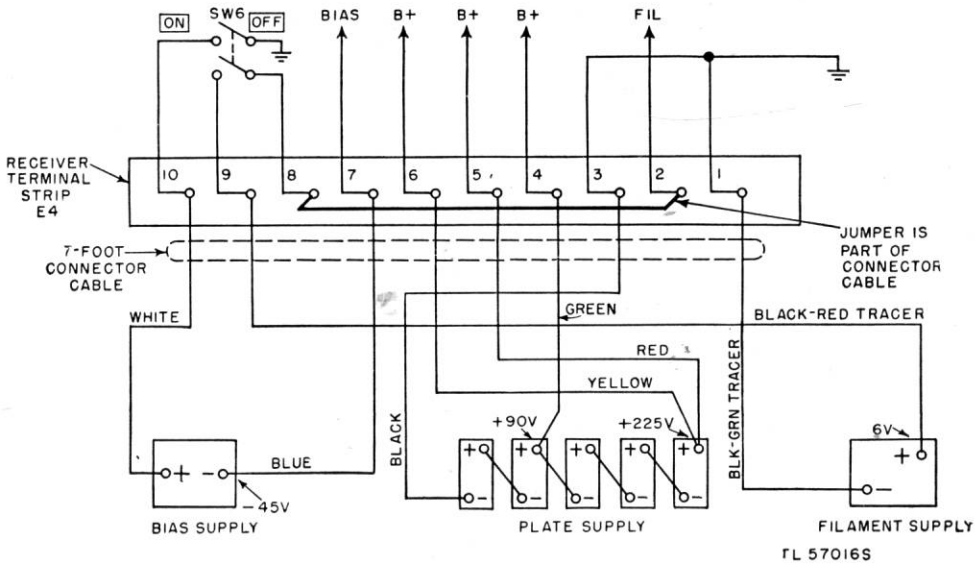

Figure 35. Connections for battery operation, functional diagram.

ManualsPlus.com

information to aid personnel engaged in this highly important duty of trouble shooting.

74. Trouble-Shooting Data

Take advantage of the material supplied in this manual. It will help the rapid location of faults. Consult the following trouble-shooting data:

a. Radio Receiver.

Fig. No.	Description
56	Radio Receiver BC–779–A, –B, schematic diagram.
57	Radio Receiver BC–794–A, –B, schematic diagram.
58	Radio Receiver BC–1004–B, –C, schematic diagram.
59	Radio Receiver R–129/U, schematic diagram.
42	Tube socket voltage and resistance chart.
36	Terminal strip, voltages, and resistances.
37	Radio receiver, chassis, top view.
38	Radio Receiver BC–779–(*), chassis, bottom view.
39	Radio Receiver BC–794–(*), chassis, bottom view.
40	Radio Receiver BC–1004–(*), chassis, bottom view.
41	Crystal selectivity unit, side view.
60	Receiver chassis, wiring diagram.
61	Receiver tuning unit, wiring diagram.

b. Power Supply Unit.

Fig. No.	Description
50	Power Supply Unit RA–74–B, –C, schematic diagram.
51	Power Supply Unit RA–84–A, –B, schematic diagram.
52	Power Supply Unit RA–94–A, schematic diagram.
45	Tube socket voltage and resistance chart.
43	Power supply unit, chassis, top view.
44	Power Supply Unit RA–94–A, chassis bottom view.

c. Pin Connections. Seen from the bottom, pin connections are numbered in a clockwise direction around the sockets. On octal sockets, the first pin clockwise from the keyway is the No. 1 pin.

75. Trouble-Shooting Steps

The first step in servicing a defective radio set is to sectionalize the fault. Sectionalization means tracing the fault to the component or *circuit* responsible for the abnormal operation of the set. The second step is to localize the fault. Localization means tracing the fault to the defective *part* responsible for the abnormal condition. Some faults such as burned-out resistors, r-f arcing, and shorted transformers can often be located by sight, smell, and hearing. The majority of faults, however, must be located by *checking voltage and resistance.*

a. Sectionalization. Careful observation of the performance of the radio receiver on the different bands and while operating the various controls may sectionalize the fault to a particular stage or circuit. The meter may indicate whether or not the r-f and i-f stages are functioning. Additional sectionalizing of the fault will be discussed in paragraphs 81 through 84.

b. Localization. Paragraphs 85 through 88 describe the method of localizing faults within the individual components. These paragraphs are accompanied by a trouble-shooting chart which lists abnormal symptoms and their probable causes. The chart also gives the procedure for determining which of the probable locations of the fault is the exact one. In addition, there are a number of drawings which show the resistance and voltage at each socket pin connection.

76. Voltage Measurements

Voltage measurements are an almost indispensable aid, for most troubles either *result* from abnormal voltages or *produce* abnormal voltages. Voltage measurements are taken easily, because they are always made between two points in a circuit; the circuit need not be interrupted.

a. Unless otherwise specified, voltages listed on the voltage charts are measured between the indicated points and ground.

b. Always begin by setting the voltmeter on the *highest* range so that the voltmeter will not be overloaded. Then, if it is necessary to obtain increased accuracy, set the voltmeter to a lower range.

c. When checking cathode voltage, remember that a reading can be obtained when the cathode resistor is actually open because the resistance of the meter may act as a cathode resistor. Thus, the cathode voltage may be approximately normal only as long as the voltmeter is connected between cathode and ground. Before cathode voltage is measured, first make a resistance check with the power off to determine whether the cathode resistor is normal.

ManualsPlus.com

77. Precautions against High Voltage

Certain precautions *must* be followed when measuring voltages above a few hundred volts. *High voltages are dangerous and can be fatal.* When it is necessary to measure high voltages, observe the following rules:

a. Connect the ground lead to the voltmeter.

b. Place one hand in your pocket. This will eliminate the possibility of making accidental contact with another part of the circuit, thus causing the electricity to travel from one hand to the other through the body.

c. If the voltage is less than 300 volts, connect the test lead to the hot terminal (which may be either positive or negative with respect to ground).

d. If the voltage is greater than 300 volts, shut off the power, connect the hot lead, step away from the voltmeter, turn on the power, and note the reading on the voltmeter. Do not touch any part of the voltmeter, particularly when it is necessary to measure the voltage between two points which are above ground.

78. Voltmeter Loading

Voltmeter resistance must be at least 10 times as great as the resistance of the circuit across which the voltage is measured. If the voltmeter resistance is nearly equal to the circuit resistance, the voltmeter will indicate a voltage *lower* than the actual voltage present when the voltmeter is removed from the circuit.

a. The resistance of a voltmeter on any range can be calculated by this simple rule: *Resistance of the voltmeter equals its ohms per volt multiplied by the full-scale range in volts.* For example: The resistance of a 1,000-ohm-per-volt meter on the 300-v range is 300,000 ohms (R = 1,000 ohms per volt times 300 v = 300,000 ohms).

b. To minimize voltmeter loading in high-resistance circuits, use the highest voltmeter range. Although only a small deflection will be obtained (possibly only five divisions on a 100-division scale), the electrical accuracy of the voltage measurement will be increased. The decreased loading of the voltmeter will more than compensate for the visual inaccuracy which results from reading only a small deflection on the voltmeter scale.

c. Close observation of the meter when switching voltage ranges will show if the voltmeter is loading the circuit under test.

(1) *Extremely heavy loading* is indicated when the deflection of the pointer on the meter (not the voltage reading) is nearly the same for different ranges.

(2) *Appreciable loading* is indicated when the voltage readings (not the deflection) for different ranges do not agree.

(3) *Negligible loading* is indicated when the voltage readings (not the deflection) for different ranges do agree.

d. The ohm-per-volt sensitivity of the voltmeter used to obtain the readings recorded on the voltage and resistance charts in this manual is printed on each chart. Use a meter having the same ohm-per-volt sensitivity. Otherwise it may be necessary to consider the effect of loading.

79. Capacitor Tests

a. General. It is often necessary to check capacitors for leakage or open or short circuits which are caused by break-down of the dielectric between the plates. This applies only to capacitors of the tinfoil paper or mica type, since the dielectric film of wet electrolytic capacitors is self-healing.

b. Open Capacitors. To check a capacitor suspected of being open, place a good capacitor in parallel with it. In r-f circuits, keep the capacitor leads as short as those of the suspected capacitor. In l-f circuits (less than 1 mc), the test capacitor leads may be several inches long. Proper operation of the equipment after the auxiliary capacitor is added indicates that the suspected capacitor is open and should be replaced.

c. Shorted or Leaky Capacitors. To check shorted or leaky capacitors observe the kick indication on an ohmmeter. Before attempting to check the capacitor, remove one lead from the circuit, since the capacitor is usually in parallel with some other circuit element. Adjust the ohmmeter to its highest range and connect it across the capacitor. If the capacitor is good, the ohmmeter needle flicks over slightly and gradually drops back to infinity. This shows that the capacitor has taken a charge and is not shorted. If the test prods are now reversed, the needle will deflect twice as far and then return to the position indicating infinite resistance. If the needle does not go back to infinity, the capacitor is leaky and should be replaced. The flick of the needle will be small for small capacitors, and the test is not reliable for capacitors which are smaller than about 0.05 mf.

ManualsPlus.com

d. Electrolytic Capacitors. Electrolytic capacitors will normally show a resistance reading. When an ohmmeter is connected across an electrolytic capacitor, a resistance reading less than about 100,000 ohms indicates a defective capacitor. If the prods are reversed, the resistance reading will normally fall to a low value. Always take both polarity readings to make sure which reading is the higher one.

80. Replacing Parts

Careless replacement of parts often makes new faults inevitable. Note the following points:

a. Before a part is unsoldered, note the position of the leads. If the part, such as a transformer, has a number of connections, tag each of the leads to it.

b. Be careful not to damage other leads by pulling or pushing them out of the way.

c. Do not allow drops of solder to fall into the set, since they may cause short circuits.

d. A carelessly soldered connection may create a new fault. It is very important to make well-soldered joints, since a poorly soldered joint is one of the most difficult faults to find.

e. When a part is replaced in r-f or i-f circuits, it must be placed exactly as the original one was. A part which has the same electrical value but different physical size may cause trouble in high-frequency circuits. Give particular attention to proper grounding when replacing a part. Use the same ground point as in the original wiring. Failure to observe these precautions may result in decreased gain or possibly in oscillation of the circuit.

81. Visual Inspection

The purpose of inspection is to locate any visible trouble. Through this inspection alone, the repairman may frequently discover the trouble, or determine the stage in which the trouble exists. This inspection is valuable in avoiding additional damage to the receiver which might occur through improper servicing methods, and in forestalling future failures. When a receiver is brought in from the field for check or repair, remove the cover and inspect the receiver as follows:

a. Examine for burned insulation and resistors. Examine for wax leakage and any discoloration of apparatus and wire.

Note. These symptoms may have been caused by a trouble previously repaired and serve only as a guide. In general, confine examination to parts readily visible with only the cover removed. Usually more harm than good will be caused by the removal of the i-f cans and other inclosed parts. Trouble in these parts can be localized by signal substitution and voltage and resistance measurements.

b. Inspect for broken or defective soldered connections to tube sockets, plugs, and other apparatus. Examine for bare wires touching the chassis or other wires.

c. Be sure that the labels on the tubes in the various sockets correspond to the correct tube numbers given in figures 13 and 14. Replace any tubes which have the wrong numbers. Inspect for loose tube sockets.

d. Inspect the fuse in the power supply unit. Check carefully for short circuits if a receiver with a blown fuse is encountered.

e. Inspect the MAIN TUNING, BAND SPREAD, and band switch controls for proper operation. The MAIN TUNING and BAND SPREAD dials should turn smoothly.

f. Inspect the power plug and replace or repair it if there are any bent or broken prongs.

g. Inspect for loose or missing screws.

82. Power Supply Unit Test

The power supply test prevents further damage to the receiver from possible short circuits. This test also indicates whether the power supply unit is functioning properly.

a. With the receiver and power supply unit connected for operation, place the OFF-ON switch in the ON position. If the receiver fails to operate, check all connections to the power supply unit and to the power source to determine whether the proper voltage is being delivered to the receiver.

b. As the receiver warms up, inspect it for any signs of abnormal operation such as smoking, arcing, or crackling. Try to detect any odors that would indicate burning of parts, insulation, etc. If any abnormal indications are present, turn the power off. Locate the cause of the abnormality by checking each component part of the circuit in which the abnormality was observed. Replace any faulty part and correct any trouble before proceeding.

c. If no abnormal indication appears, measure the voltage and resistance between the terminals of terminal strip E4 and the receiver chassis (fig. 36). Correct readings will indicate that the power supply

ManualsPlus.com

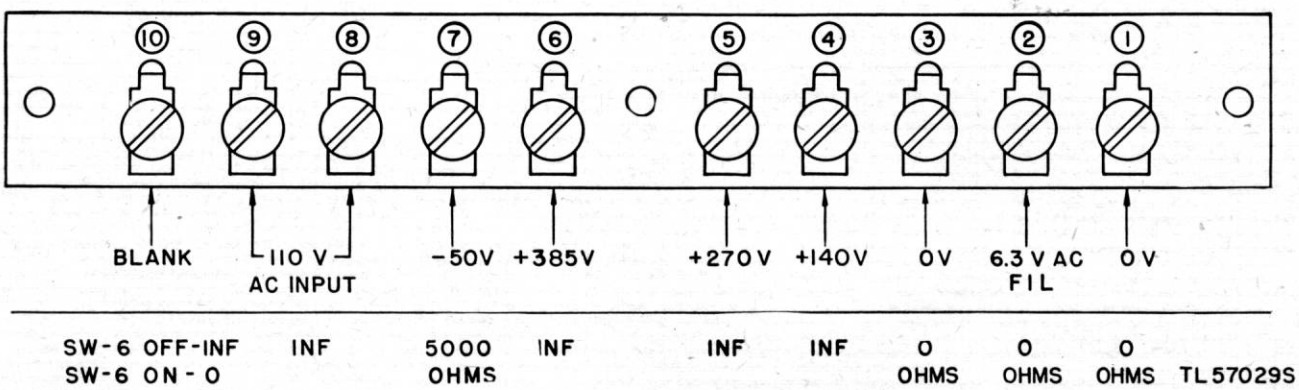

Figure 36. Receiver terminal strip, voltage and resistance measurements.

is functioning properly. Incorrect voltage readings at terminal strip E4 indicate improper operation of the power supply or receiver.

d. After the receiver has been running for about 10 minutes, feel the tubes cautiously to see if they are all warm or hot. No tube should remain cold. If a tube does not warm up, examine the wiring associated with its socket and examine the socket contacts. If there is no wiring trouble and the tube does not warm up, test it. If no vacuum tube test set is available, replace the tube.

83. Equipment Performance Test

The equipment performance test is important because it frequently indicates the general location of the trouble. In many instances the exact nature of the fault can be determined with the information gained. In order for this information to be utilized fully, all symptoms must be interpreted in relation to each other. The equipment performance test or check list is given in paragraph 21.

84. Trouble-Shooting Chart

The following chart is supplied as an aid in locating trouble in the radio receiver and associated power supply unit. This chart lists the symptoms which the operator may observe, either visually or audibly, while making a few simple tests. The chart also indicates how to sectionalize trouble quickly to the audio, i-f, or r-f stages of the receiver. The signal substitution tests outlined in paragraphs 86, 87, and 88 can then be used to determine the defective stage. A tube check and voltage and resistance measurements of this stage should ordinarily be sufficient to isolate the defective part.

Symptom	Probable trouble	Correction
1. ON-OFF switch in ON position. Receiver fails to operate and dial lamps do not light.	1. Open fuse F1 in power supply unit. Connecting leads to fuse holder broken.	1. Replace fuse. If it blows again, check filter capacitors C1 and C2. Repair leads.
2. No receiver output. With AVC–MANUAL switch at AVC, and SENSITIVITY control at 10. S-meter dips and rises as MAIN TUNING dial is rotated.	2. Defect exists between 2d i-f and a-f output stages.	2. Use headphones, with 0.1-mf capacitor in series with one lead, across grid and plate circuits of successive audio stages to localize defective stage. Test tube in this stage and then, if necessary, make voltage and resistance measurements to locate defective part. An alternate method is to use signal substitution in audio stages (par. 86).

ManualsPlus.com

Symptom	Probable trouble	Correction
3. Receiver inoperative. S–meter does not deflect as reeciver is tuned. Dial lamps light.	3. Failure of B plus supply.....	3. Remove metal cover from receiver terminal strip E4 and compare voltages measured between each terminal and chassis with values shown (fig. 36). If no B plus voltage is present, check power supply unit tubes. If voltage is low, check filter capacitors C1 and C2.
	Defect exists between antenna terminal and detector stage.	See symptoms 4 and 5.
4. A-f circuits satisfactory but no receiver output is obtained when modulated 465-kc i-f signal is applied through a series capacitor to grid cap of mixer, V3.	4. Faulty i-f stage	4. Use signal substitution in i-f stages (par. 87) to locate defective stage. Test tube and make tube socket voltage and resistance tests.
5. A-f and i-f circuits satisfactory but no output is obtained when r-f modulated signal is applied to antenna A post and receiver is tuned to this signal.	5. Faulty r-f stage	5. Use signal substitution in r-f stages par. 88) to locate defective stage and then the faulty component.
6. A-m signals received but no beat note obtained when SIGNAL MOD–CW switch is turned to CW. Beat note heard when i-f c-w signal is applied to terminal 4 of V7.	6. Defective b-f-o stage V10.....	6. Test V10 and its tube socket resistances and voltages.
7. Reception weak. With no signal tuned in, roaring noise is not heard when AUDIO GAIN and SENSITIVITY controls are turned to maximum setting and CRYSTAL SELECTIVITY switch is at OFF. Tuning S-meter does not rise to customary peaks for reception of known stations.	7. Weak tubes	7. Check tubes.
	Low plate or screen voltage due to shorted capacitor in plate or screen return circuit.	Check voltages and make resistance checks.
	Receiver not properly alined.....	Realine receiver.
8. Reception distorted	8. Open grid resistor or leaky capacitor in audio circuits.	8. Use headset, with 0.1-mf capacitor in series with one lead, to localize faulty stage. Check grid circuit.
9. Noisy and fading reception.....	9. Faulty gain controls.....	9. Check slider contact in SENSITIVITY and AUDIO GAIN controls.
	Faulty antenna circuit	Check antenna installations for leakage paths to ground, and also for loose connections.
10. Objectionable hum in output.....	10. Shorted or open filter capacitors in power supply unit.	10. Check each capacitor by disconnecting positive lead from each section and charging each, then discharging by shorting to chassis with screw driver whose handle is insulated from the blade. Capacitors which do not seem to store sufficient charge, as indicated by size of discharge spark, may be faulty. Check by connecting new equivalent capacitor for comparison.

ManualsPlus.com

Symptom	Probable trouble	Correction
	Shorted turns in power supply unit choke.	Check for shorted turns by measuring resistance of L1 and L2. L1 should be 350 ohms; L2, 1,150 ohms.
	Short between winding and core in power supply unit choke.	Check for open circuit between either filter choke terminal and case or core. If circuit is not open, replace choke.
11. Intermittent noise	11. Defective tube, resistor, or capacitor.	11. Gently tap and slightly move all tubes, resistors, capacitors, and soldered connections with an insulated prod to locate loose elements in tubes or loose connections to any component.
12. Oscillation (indicated by whistle or howl).	12. Defective tube, poor shielding, interstage coupling, or high-resistance soldered chassis return.	12. Check tubes, and shunt bypass capacitors with capacitors of equal value.

85. Signal Substitution Notes

a. Signal substitution requires a source of audio, i-f, and r-f signals. Signal Generator I–72–( ) is suitable for this purpose.

b. In addition, a headset or permanent magnet loudspeaker such as Headset HS–30–(*) or Loudspeaker LS–3, respectively, are necessary.

c. An analyzer and tube tester are also needed to isolate the defective part after the faulty stage has been indicated by signal substitution.

d. In the tests indicated in paragraphs 86, 87, and 88, ground one side of the signal generator to the receiver chassis and connect the other side through a capacitor (about 0.05 mf) to the receiver point as directed.

e. Note the volume, and listen for serious distortion from the loudspeaker or headset at the various points in the signal substitution procedure. If possible, compare with a receiver known to be in good condition.

f. Check the wiring and soldering in each stage during the procedure.

Note. Do not remove the shield can of the tuned unit until the trouble has been traced to that particular unit. Do not damage the wiring by pushing it back and forth during inspection. Be careful not to damage the receiver in any other way.

g. Misalinement of one or more stages of the receiver will cause reduced output. Misalinement of the h-f oscillator may prevent any output.

h. When trouble is localized in a given stage, first test the tube if such a test is indicated; then measure the voltage; and finally measure the resistance at the tube socket of that stage.

i. Trouble in a circuit or stage may not cause changes in voltage and resistance measurements at the tube socket. The notes included in this paragraph are merely a guide and should suggest other procedures, such as voltage and resistance measurements on individual parts.

j. Remove only *one* tube at a time when testing. Check the number of the tube, test it, and, if it is not defective, return it to its proper socket before another tube is removed.

k. Each step presupposes the satisfactory completion of all previous steps. Any trouble located should be isolated and cleared before proceeding with any succeeding steps.

86. A-F Tests

a. Terminal 3 of V15 and V16 (Plates of A-F Output). Apply an audio signal through a series capacitor (approximately 0.05 mf.) to terminal 3 of V15 and V16 in turn. Listen for the signal in the headset which is connected to the PHONES jack. The volume will be very low. If a speaker is connected to the SPKR terminals at the rear of the receiver chassis, a low signal should be heard. If no signal is heard, inspect the leads to transformer T8 and the PHONES and SPKR connections.

b. Terminal 5 of V15 and V16 (Grids of A-F Output). Place the audio signal on terminal 5 of V15 and V16 in turn. Listen for an increased

ManualsPlus.com

output in the headset, or speaker if used. The output should be the same for either terminal. If the output is weaker for one terminal, test the tube associated with that terminal. If no signal is heard, check resistor R36. Also check the plate supply voltage for V15 and V16.

c. Terminal 3 of V14 (Plate of A-F Driver). Introduce the signal at terminal 3 of V14 and listen for signal in the headset or speaker. If there is no signal, check the primary of T7 for an open circuit. Note that if plate voltage is obtained at the plate, terminal 3, of V14, the primary of T7 is not open.

d. Terminal 5 of V14 (Grid of A-F Driver). Place the audio signal on terminal 5 of V14. The output signal should be much louder than when it was applied to the plate terminal. If there is no signal or a weak signal, test V14 and the voltages at the socket terminals. Check the wiring and soldered connections.

e. Terminal 3 of V13 (Plate of 1st Af). Introduce the signal at terminal 3 of V13 and listen for the signal. If there is no signal, coupling capacitor C25 may be open. Check for an open by paralleling C25 with another 0.05-mf capacitor.

f. Terminal 5 of V13 (Grid of 1st Af). Place

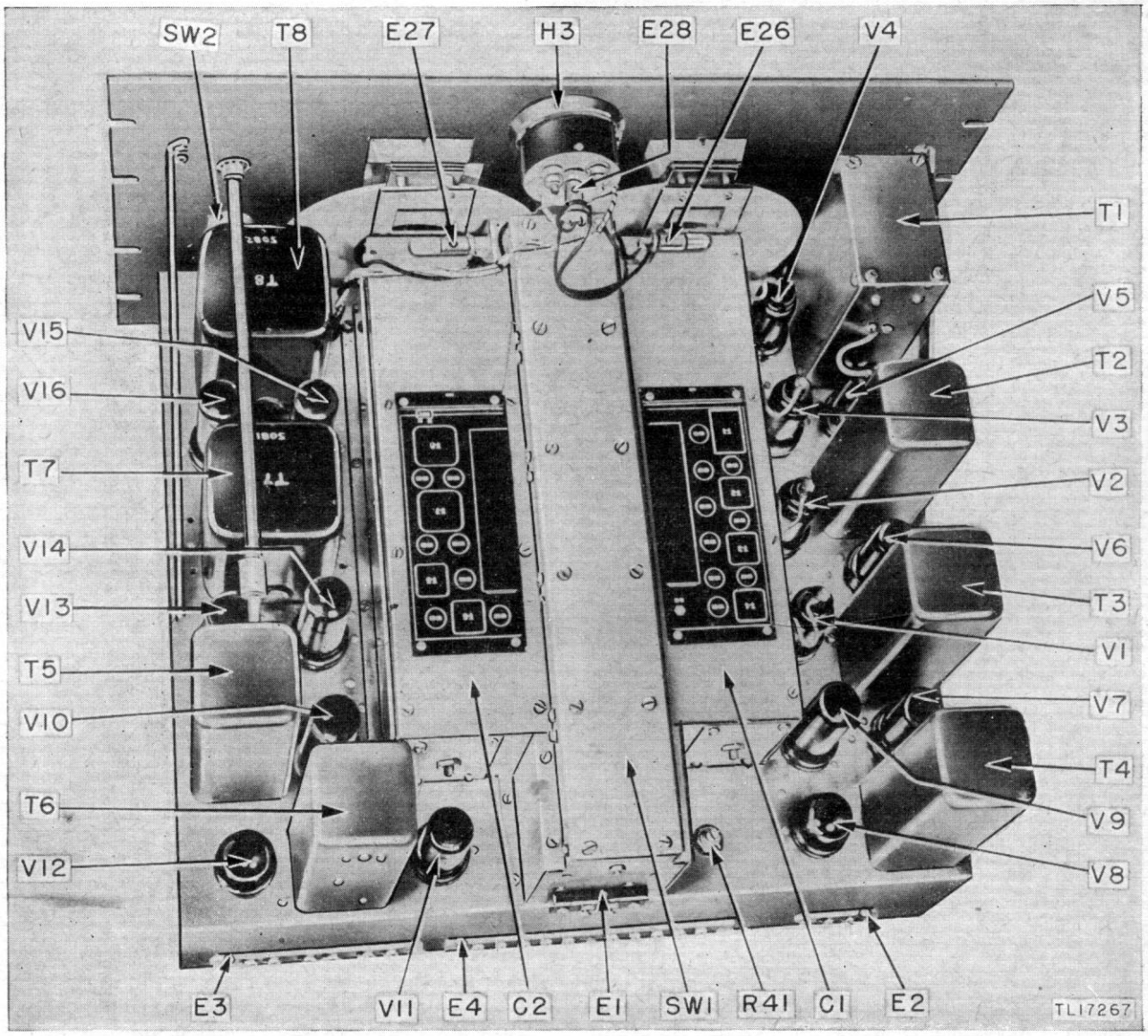

Figure 37. Radio receiver, chassis, top view.

ManualsPlus.com

the audio signal on terminal 5 or V13. Reduce the signal input. If there is no signal from the headset or loudspeaker, test V13. Measure the voltages at the tube socket terminals.

g. AUDIO GAIN POTENTIOMETER R26. Apply the audio signal in turn to the center and then to the ungrounded lug of R26. In the latter position, the volume of the signal in the headset should vary as the AUDIO GAIN control is rotated. If no signal is heard, check capacitor C24 for an open circuit. If the signal output is obtained with the audio input applied to the center lug but is not obtained with the audio input applied to the ungrounded lug of R26, check R26.

h. PHONO TERMINALS. Apply the audio signal to the ungrounded PHONO terminal. If no signal is heard, check the connection from the terminal to R26.

i. TERMINALS 3 AND 5 OF V8 (PLATES OF DETECTOR). Place the audio signal on terminal 3 or 5 of V8. The signal should be heard in the headset. If the signal is not heard, check L32, R48, and R24, for an open circuit. Check C45 for a short circuit.

j. TERMINAL 8 OF V9 (CATHODE OF LIMITER). Apply the audio signal to terminal 8 of V9. The signal should be heard when the LIMITER OFF-ON switch is placed in the ON position. If the signal is not heard, check the LIMITER OFF-ON switch, SW5.

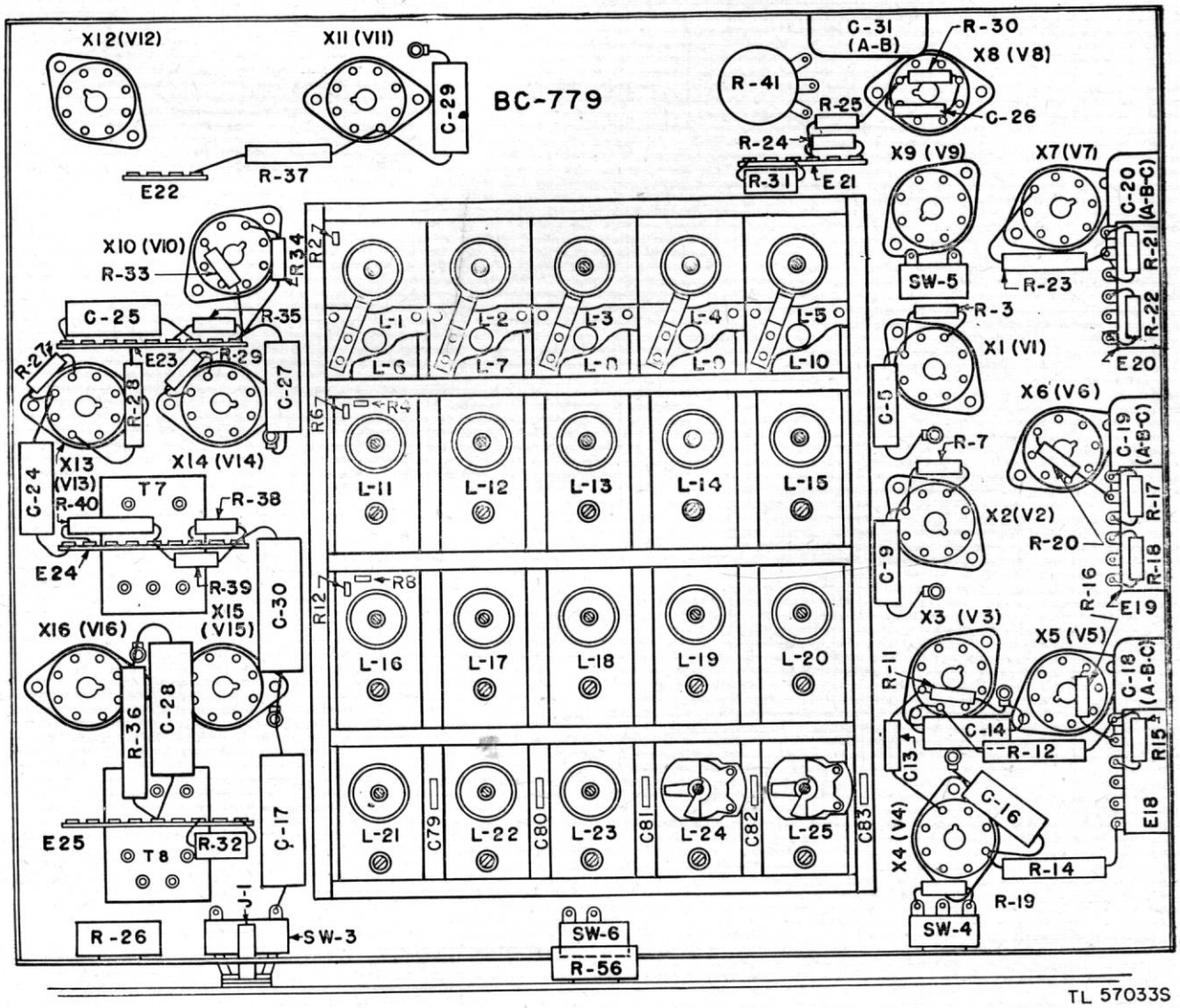

Figure 38. Radio Receiver BC-779-(*), chassis, bottom view.

ManualsPlus.com

Symptom	Probable trouble	Correction
	Shorted turns in power supply unit choke.	Check for shorted turns by measuring resistance of L1 and L2. L1 should be 350 ohms; L2, 1,150 ohms.
	Short between winding and core in power supply unit choke.	Check for open circuit between either filter choke terminal and case or core. If circuit is not open, replace choke.
11. Intermittent noise	11. Defective tube, resistor, or capacitor.	11. Gently tap and slightly move all tubes, resistors, capacitors, and soldered connections with an insulated prod to locate loose elements in tubes or loose connections to any component.
12. Oscillation (indicated by whistle or howl).	12. Defective tube, poor shielding, interstage coupling, or high-resistance soldered chassis return.	12. Check tubes, and shunt bypass capacitors with capacitors of equal value.

85. Signal Substitution Notes

a. Signal substitution requires a source of audio, i-f, and r-f signals. Signal Generator I–72–( ) is suitable for this purpose.

b. In addition, a headset or permanent magnet loudspeaker such as Headset HS–30–(*) or Loudspeaker LS–3, respectively, are necessary.

c. An analyzer and tube tester are also needed to isolate the defective part after the faulty stage has been indicated by signal substitution.

d. In the tests indicated in paragraphs 86, 87, and 88, ground one side of the signal generator to the receiver chassis and connect the other side through a capacitor (about 0.05 mf) to the receiver point as directed.

e. Note the volume, and listen for serious distortion from the loudspeaker or headset at the various points in the signal substitution procedure. If possible, compare with a receiver known to be in good condition.

f. Check the wiring and soldering in each stage during the procedure.

Note. Do not remove the shield can of the tuned unit until the trouble has been traced to that particular unit. Do not damage the wiring by pushing it back and forth during inspection. Be careful not to damage the receiver in any other way.

g. Misalinement of one or more stages of the receiver will cause reduced output. Misalinement of the h-f oscillator may prevent any output.

h. When trouble is localized in a given stage, first test the tube if such a test is indicated; then measure the voltage; and finally measure the resistance at the tube socket of that stage.

i. Trouble in a circuit or stage may not cause changes in voltage and resistance measurements at the tube socket. The notes included in this paragraph are merely a guide and should suggest other procedures, such as voltage and resistance measurements on individual parts.

j. Remove only *one* tube at a time when testing. Check the number of the tube, test it, and, if it is not defective, return it to its proper socket before another tube is removed.

k. Each step presupposes the satisfactory completion of all previous steps. Any trouble located should be isolated and cleared before proceeding with any succeeding steps.

86. A-F Tests

a. Terminal 3 of V15 and V16 (Plates of A-F Output). Apply an audio signal through a series capacitor (approximately 0.05 mf.) to terminal 3 of V15 and V16 in turn. Listen for the signal in the headset which is connected to the PHONES jack. The volume will be very low. If a speaker is connected to the SPKR terminals at the rear of the receiver chassis, a low signal should be heard. If no signal is heard, inspect the leads to transformer T8 and the PHONES and SPKR connections.

b. Terminal 5 of V15 and V16 (Grids of A-F Output). Place the audio signal on terminal 5 of V15 and V16 in turn. Listen for an increased

ManualsPlus.com

c. Beat-Frequency Oscillator V10. Remove the modulation from the i-f signal applied to terminal 4 of V7. Turn the SIGNAL MOD-CW switch to CW. A tone should be heard in the headset. Rotate the BEAT OSCILLATOR control and note that the pitch of the tone changes. If these results are not obtained, check the b-f-o tube, V10, and associated circuit.

d. Terminal 8 of V6 (Plate of 2d I.F.). Turn the SIGNAL MOD-CW switch to MOD and introduce a 465-kc modulated signal through the series capacitor at terminal 8 of V6. A signal should be heard in the headset. The output volume is less than the output volume is with the same signal applied to terminal 4 of V7 (grid of 3d i.f.). If no signal is obtained, check the alinement of C39. Also check continuity of L30.

e. Terminal 4 of V6 (Grid of 2d I.F.). Place the modulated i-f signal on terminal 4 of V6. The output signal should be louder than the signal obtained with the same signal applied to terminal 4 of V7 (grid of 3d i. f.). If no signal or a weak signal is obtained, check V6. Check alinement of C38. Measure the tube socket voltage and resistances of V6.

f. Terminal 3 of V5 (Plate of 1st I.F.). With the i-f signal on terminal 3 of V5, listen for a signal output in the headset. This output signal is weaker

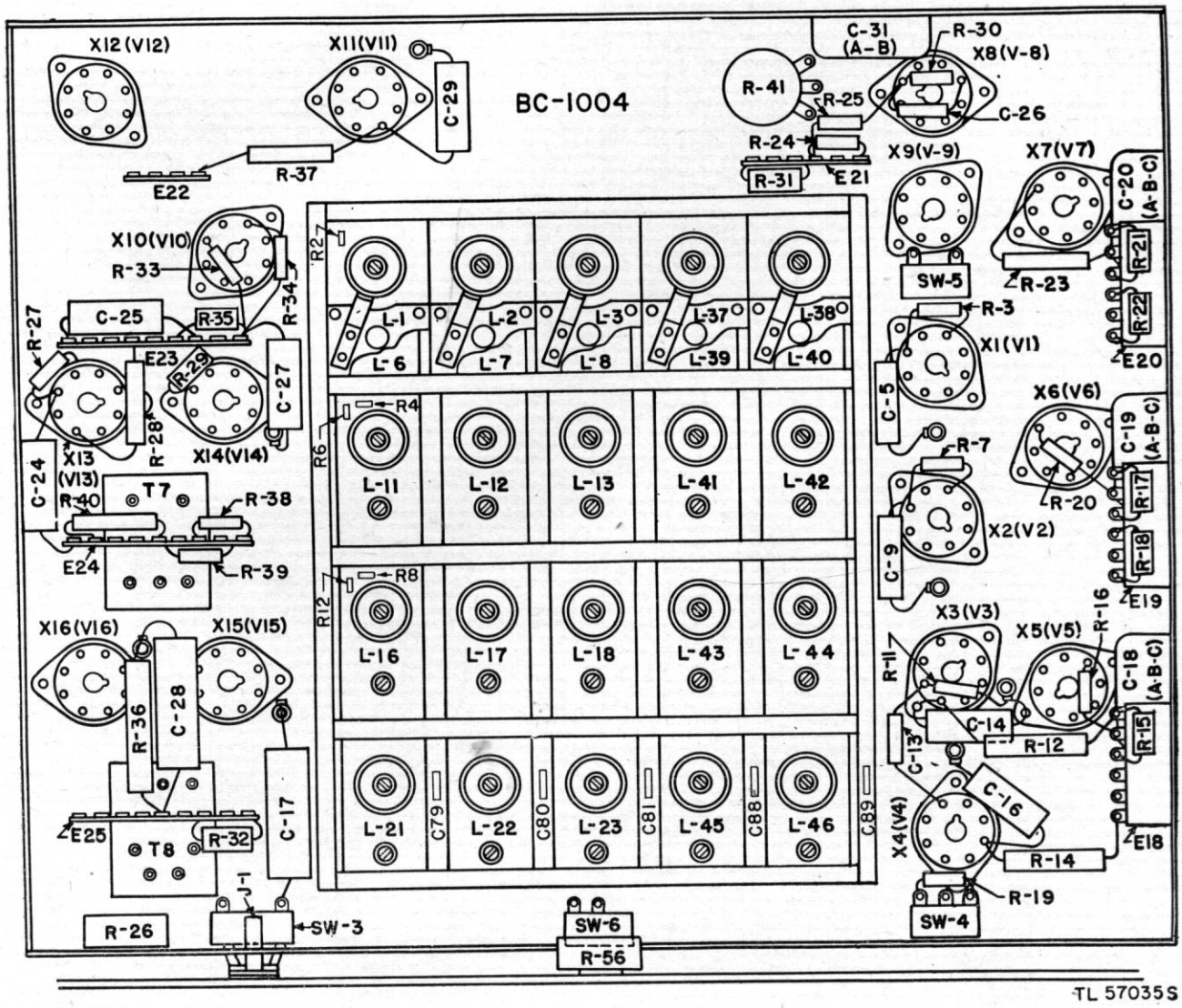

Figure 40. Radio Receiver BC-1004-(*), chassis, bottom view.

ManualsPlus.com

than with the same level i-f signal applied to terminal 4 of V6 (grid at 2d i.f.). If no signal is heard, check alinement of C37 and C36. Also check continuity of L28.

g. Grid Cap of 1st I.F., V5. Place the i-f modulated signal on the grid cap of V5. The output signal should be louder than when the same input is applied to terminal 4 of V6 (grid of 2d i.f.). If the output is too weak or if no output is obtained, check V5 and the alinement of C36. Check the voltages and resistances at the tube socket terminals of V5.

h. Terminal 3 of V3 (Plate of Mixer). Apply the i-f signal to terminal 3 of V3. The output should be less than with the same input signal applied at the grid of V5. If no signal is obtained, check the continuity of L26. *Do not tamper with the adjustment of L27.* Check the leads to terminal 3 of V3 for a possible short to ground.

i. Grid Cap of Mixer, V3. Introduce the i-f signal at the grid cap of V3. The output of the receiver should be louder than when the same level i-f signal is applied to the grid cap of the 1st i.f., V5. If this result is not obtained, check V3 and the alinement of L26. If the trouble is still not cleared, measure the voltages and resistances at the tube socket of V3.

j. CRYSTAL SELECTIVITY Circuit. Turn the CRYSTAL SELECTIVITY switch to 5. Apply the signal generator i-f output to the grid cap of the mixer, V3; and adjust the signal generator frequency, the output controls, and the receiver SENSITIVITY control so that a weak receiver output is obtained. Rotate the CRYSTAL SELECTIVITY control through positions 4, 3, 2, 1, and OFF. The receiver output should successively increase. If no signal is obtained in postions 1 through 5, try another crystal. If no signal is obtained in any one position but obtained in other positions of the CRYSTAL SELECTIVITY switch, check the switch contacts and R42, R43, R44, and R45. Place the CRYSTAL SELECTIVITY switch at OFF.

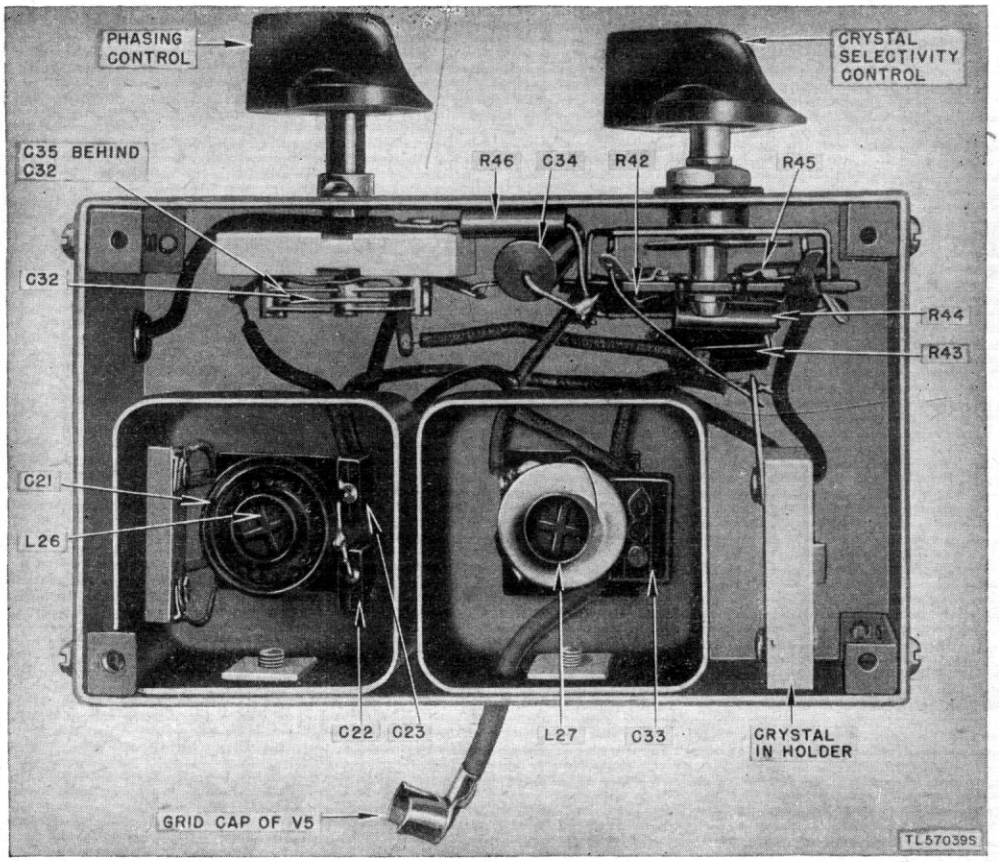

Figure 41. Crystal selectivity unit, side view.

ManualsPlus.com

88. R-F Tests

a. Grid Cap of Mixer, V3. Apply an r-f modulated signal through a series capacitor to the grid cap of the mixer, V3. Loosely winding the signal generator lead around the grid cap should be sufficient. Set the receiver to approximately the frequency of the r-f source and tune for output in the headset. If it is impossible to obtain the modulation of the r-f signal, either the source of r-f signal is not providing voltage on the grid cap of V3 or the h-f oscillator of the receiver is not functioning. In the latter case, check V4, the tube socket voltages and resistances, and associated elements. Capacitor C13 or resistor R11 may be defective. The band switch contacts SW–1E may be faulty.

b. Terminal 3 of V2 (Plate of 2d Rf). Introduce the r-f modulated signal through the series

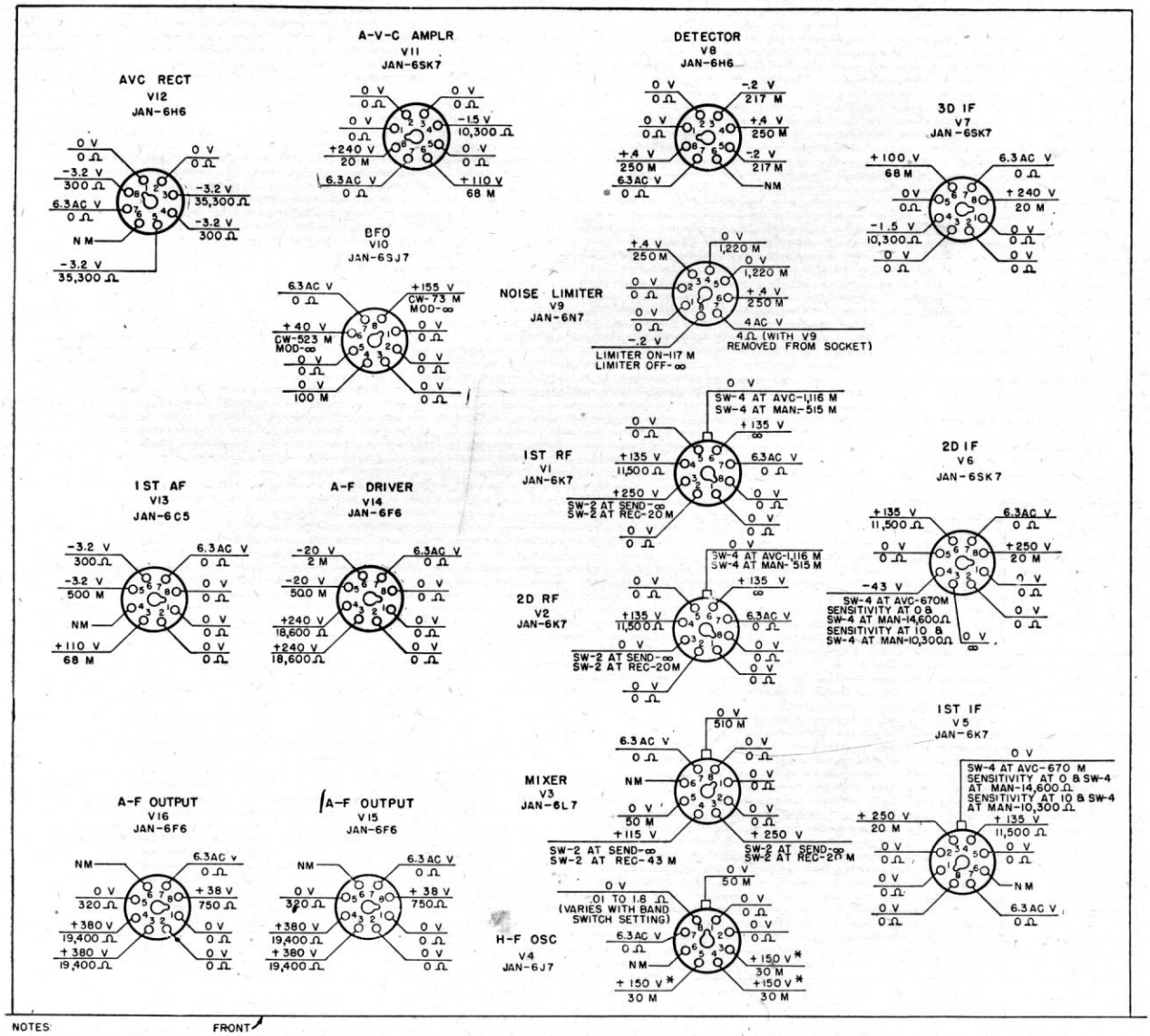

NOTES:

1. READINGS BASED ON AN A-C LINE VOLTAGE EXACTLY EQUAL TO THE PRIMARY TAP ON THE POWER SUPPLY UNIT POWER TRANSFORMER. HIGHER OR LOWER LINE VOLTAGE SHOULD RESULT IN CORRESPONDING VARIATIONS IN THESE READINGS.
2. VOLTAGES AND RESISTANCES MEASURED TO CHASIS WITH A 1,000 OHM-PER-VOLT METER.
3. SENSITIVITY AND AUDIO GAIN AT 0.
4. SIGNAL MOD-CW SWITCH AT CW.
5. AVC-MANUAL SWITCH AT MANUAL.
6. SEND-REC SWITCH AT REC.
7. LIMITER SWITCH AT ON.
8. * VARIES WIDELY WITH DIFFERENT TUBES; ALSO WITH DIAL SETTING.
9. NM INDICATES NOT MEASURED
10. M=1,000 Ω

Figure 42. Radio receiver, tube socket voltage nad resistance diagram.

ManualsPlus.com

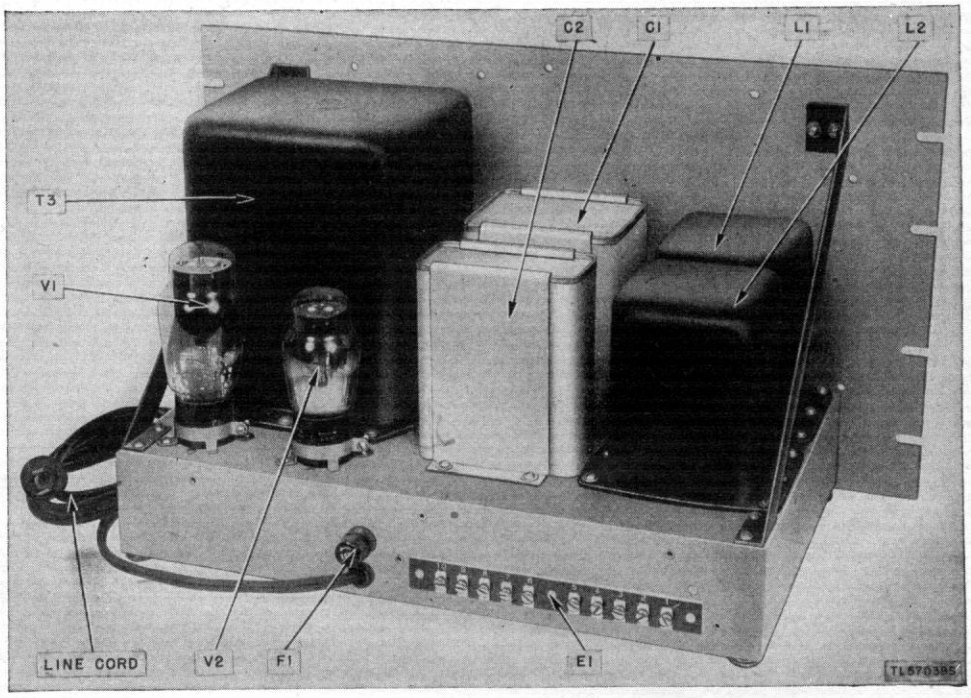

Figure 43. Power Supply Unit RA-94-A, chassis, top view.

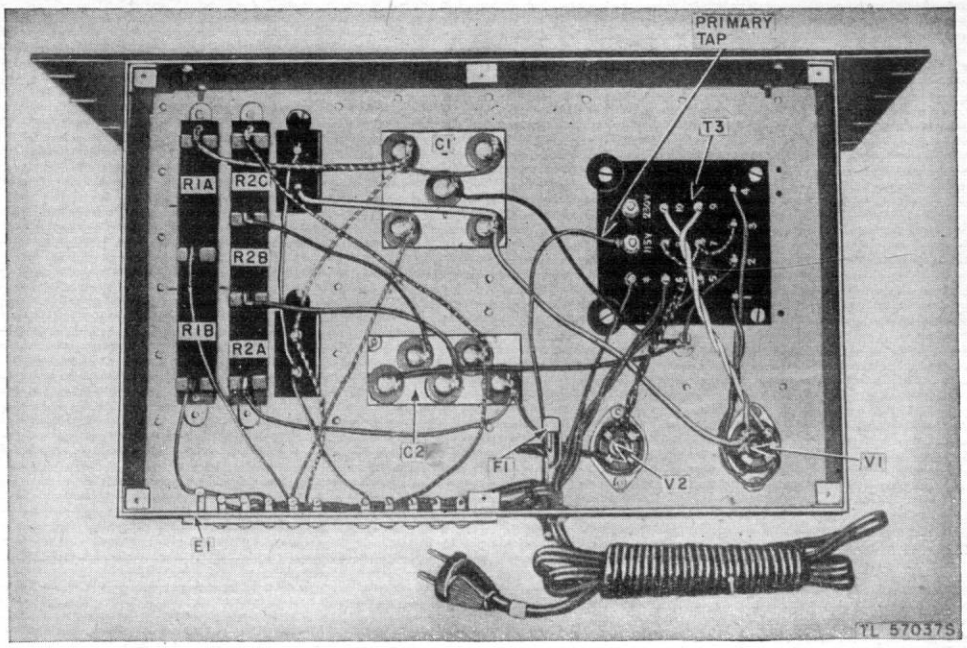

Figure 44. Power Supply Unit RA-94-A, chassis, bottom view.

ManualsPlus.com

capacitor at terminal 3 of V2. The output of the receiver should be approximately the same as with the same signal applied to the grid cap of V3. If no output or a weak output is obtained, check C11 for an open.

c. Grid Cap of 2d Rf, V2. Introduce the r-f signal at the grid cap of V2. It will probably be necessary to adjust the SENSITIVITY control in order to obtain an output signal in the headset. The SENSITIVITY control adjusts the bias for V1 and V2 but not for V3. If no signal output is obtained in the headset, check V2. Measure the tube socket voltages and resistances and check the associated circuit elements.

d. Terminal 3 of V1 (Plate of 1st Rf). Place the r-f signal at terminal 3 of V1. The signal output of the receiver should be approximately the same as with the same signal applied to the grid cap of V2. If no output is obtained, capacitor C7 may be open. If trouble is suspected in the band change switch contacts, try a different receiver band and adjust the frequency of the signal generator to the new frequency setting of the receiver. If a signal output is obtained, either the suspected band change switch contacts or the leads to them are faulty.

e. Grid Cap of 1st Rf, V1. A very loud receiver output should be obtained as the signal generator lead is brought near the grid cap of V1. If this result is not obtained, test V1. Make tube socket voltage and resistance measurements and check the associated circuit elements.

f. Antenna Terminals AA. Place the r-f signal at either antenna A post at the rear of the receiver. A very loud signal should be heard. If there is no signal output, check C3 for an open circuit. Check the wiring to the antenna A terminals for a possible short circuit to ground. The band switch contacts SW–1A and SW–1B can be checked by trying different bands and adjusting the frequency of the signal generator accordingly. With no signal applied to the receiver, and the SENSITIVITY and AUDIO GAIN controls at maximum setting, a roar should be heard in the headset. If no roar is obtained, one or more tubes may be weak. If the roar changes to a hiss when the SIGNAL MOD–CW is placed at CW, the bfo is functioning.

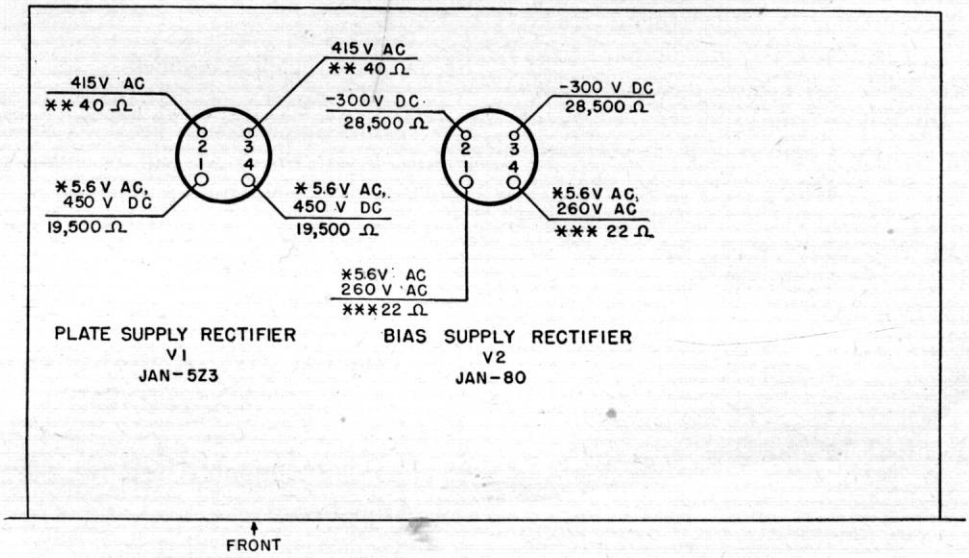

NOTES:

1 A-C LINE VOLTAGE EQUAL TO PRIMARY TAP ON POWER TRANSFORMER.
2 LOADED BY PROPERLY CONNECTED RECEIVER.
3 VOLTAGES AND RESISTANCES MEASURED TO CHASSIS WITH A 1,000 OHM-PER-VOLT METER.
4 * MEASURED ACROSS FILAMENTS.
5 ** 55 OHMS FOR RA-74-C.
6 *** 34 OHMS FOR RA-74-C.

TL 57031S

Figure 45. Power supply unit, tube socket voltage and resistance diagram.

ManualsPlus.com

Section XIII. REPAIRS

89. Adjustment of Dial Gearing and Friction Drive

a. Main Tuning Dial Gearing. A heavy shock may cause the idler gear controlling the main tuning dial mask to jump out of mesh. This will result in faulty operation of the dial mask when the band switch knob is turned. The idler gear is located between the S-meter and the main tuning dial escutcheon. Use a long screw driver to spring the idler gear carefully back into line while slightly rocking the band switch knob back and forth to permit the gear teeth to engage. If the dial mask does not properly synchronize with the band switch dial, turn the dial mask by hand to the correct position while holding the idler gear out of mesh.

b. Main Tuning Dial Mask. If the front panel is bent, it will cause the main tuning dial escutcheon to press heavily enough against the main tuning dial guides to pinch them in on the dial mask. The mask is driven through gears by the band switch knob, and any extra friction on the mask will make the band switch difficult to turn. Relieve this condition by springing the dial guide assembly back sufficiently to permit the mask to rotate freely.

c. Friction Drive. Remove the bottom cover plate from the receiver and make sure that the two friction disks are tightly squeezing the edges of the main tuning and band spread dials, respectively. These disks are held on the friction drive shaft by a hexagonal nut which can be tightened with a wrench or pliers. If a heavy shock has caused the dial to jump completely out from between the disks, remove the outer disk and replace it with the dial in its proper position. Replace the washers exactly as they were originally assembled.

90. Replacement of Tuning Dial Setscrews

When the setscrews holding the tuning dial assemblies to the shafts of tuning capacitors work loose, replace them with a self-locking, cup-point type setscrew (Screw, set: 8-32 x 1/8", knurled, cup-point, self-locking, Allen head; Signal Corps stock No. 6L18508–2.39–2).

91. Rustproofing and Repainting

When the finish on the receiver or power supply unit case has been badly scarred or damaged, prevent rusting and corroding by touching up the bared surface as follows:

a. Use #00 or #000 sandpaper to clean the surface down to the bare metal. Obtain a bright, smooth finish.

Caution: Do not use steel wool. Minute particles of steel wool frequently enter the case and cause harmful internal shorting or grounding of circuits.

b. When a touch-up job is necessary, apply paint with a small brush. When numerous scars and scratches warrant complete repainting, remove the radio set chassis and spray paint over the entire case. Remove rust from the case by cleaning corroded metal with solvent (SD). In severe cases it may be necessary to use solvent (SD) to soften the rust and then sandpaper to complete the preparation for painting. Paint will be authorized and consistent with existing regulations.

92. Unsatisfactory Equipment Report

a. WD AGO Form 468 (Unsatisfactory Equipment Report) For Equipment Used By Army Ground Forces and Technical Services. WD AGO Form 468 will be filled out and forwarded through channels to the Office of the Chief Signal Officer, Washington 25, D. C., when trouble occurs more often than is normal, as determined by qualified repair personnel.

b. AAF Form 54 (Unsatisfactory Report) for Equipment Used by United States Air Force. AAF Form 54 will be filled out and forwarded to Commanding General, Air Matériel Command, Wright Field, Dayton, Ohio, in accordance with AAF Regulation 15–54.

Section XIV. ALINEMENT AND ADJUSTMENT

93. Test Instruments Used for Alinement and Adjustment

a. Signal Generator. The signal generator should be an accurately calibrated instrument producing modulated r-f signals, such as Signal Generator I–72–(*). In addition to 465 kc (the i-f of the receiver), the frequency range required of the signal generator depends on the tuning range of the receiver to be alined. The alinement frequencies required for Radio Receivers BC–779–(*), BC–794–(*), BC–1004–(*), and R–129/U are

ManualsPlus.com

shown in figures 46, 47, 48, and 49, respectively. If necessary, the second harmonic can generally be used when the fundamental frequency is not available. For example, a signal generator covering all frequencies from 100 kc to 20 mc, in addition to being ideal for checking Radio Receiver BC–779–(*), could be used to check Radio Receiver BC–794–(*), by using the second harmonic of 20 mc instead of the 40 mc called for in figure 47. The signal generator should have an output of about 100 microvolts and an output impedance of approximately 100 ohms for best results when alining the r-f and h-f oscillator circuits. For i-f alinement these values are not critical. The frequency calibration of the signal generator is extremely important in order that the receiver dial calibration be correct.

b. Output Meter. The output meter should respond to the modulation frequency of the signal generator, preferably 400 cycles per second (cps), and should provide at least half-scale deflection for 10v. Its resistance should be greater than 500 ohms. Test Set I–56–( ) is satisfactory.

c. Frequency Meter. This equipment is required for testing the accuracy of the signal generator at its various settings during alinement. Frequency Meter SCR–211–( ) is adequate if available.

d. Headset or PM Loudspeaker. These items are to be used during alinement. Loudspeaker LS–3, or equivalent, can be used.

e. Alinement Tool. A suitable alinement tool such as an insulated screw driver $^{9}/_{64}$ inch wide and 0.025 inch thick at the bit is required for alinement of the receiver.

94. Calibration of Signal Generator

Accurate alinement of the h-f oscillator in the receiver requires the use of the frequency meter to check the signal generator setting, as follows: Place the signal generator and the frequency meter near each other. Turn on both equipments and allow them to warm up for a least 15 minutes. Attach a piece of wire to the signal generator output connection and place the wire near the frequency meter antenna. Calibrate the frequency meter according to instructions furnished with the meter. Set the frequency meter to the exact frequency at which the signal generator is to be used. While listening to the headset, which is connected to the frequency meter, tune the signal generator to the approximate frequency until a zero beat is heard. The signal generator is now set for the exact frequency desired. Turn off the frequency meter and remove the wire attached to the signal generator output connection.

95. I-F Alinement Procedure

a. Throw the OFF-ON switch to ON and let the receiver warm up for about an hour before beginning adjustments. Connect the output meter to the SPKR terminals located at the rear of the receiver chassis.

b. Adjust the signal generator to approximately 465 kc, and connect the output to the control grid cap of mixer tube V3 through a fixed capacitor (anything larger than 100 mmf will do).

c. Set the panel controls as follows:

Control	Setting
SENSITIVITY	0
AVC–MANUAL	MANUAL
SIGNAL MOD–CW	MOD
SEND–REC	REC
BAND SWITCH	2.5–5.0-mc.
AUDIO GAIN	10
CRYSTAL SELECTIVITY	OFF
PHASING	on arrow
BAND WIDTH	3
BAND SPREAD dial	100

d. Set the MAIN TUNING dial near 2.5 mc, but be careful not to tune in a powerful local signal.

e. Tune the signal generator to the proper alinement frequency as follows: Set the CRYSTAL SELECTIVITY switch on 3, the AVC-MANUAL switch on AVC, and advance the SENSITIVITY control to 10. Turn off the modulation of the signal generator and slightly adjust its frequency until maximum deflection of the S-meter is obtained. If necessary, reduce the output of the signal generator to keep the S-meter needle on scale. The adjustment of the signal generator frequency in this manner is necessary in order to get exact agreement with the natural period of the particular quartz crystal in the receiver being checked.

f. After reducing the SENSITIVITY control to 0, switch on the modulation of the signal generator. *Do not alter* the tuning of the signal generator until the b-f-o alinement procedure in paragraph 97 has been completed. Return the CRYSTAL SELECTIVITY and AVC-MANUAL controls to their original settings of OFF and MANUAL, and advance the SENSITIVITY control until a suitable output meter reading is secured. A half-scale reading of about 5 or 10 v is suitable.

ManualsPlus.com

g. Aline the single trimmer in T4 for peak reading of the output meter. Then aline in turn the grid (upper) and plate (lower) air trimmer capacitors in i-f transformers T3 and T2 for peak reading of the output meter. If one or more of these adjustments results in a sizable increase of output, reduce the SENSITIVITY control enough to bring the meter reading back to half-scale. Alinement of the plate circuit of crystal filter T1 can be tested in the same way by means of the lower adjusting screw on the side of the unit. This screw varies the position of the powdered iron core in coil L26.

Caution: Do not change the setting of the upper adjusting screw which tunes grid coil L27; this circuit cannot be adjusted properly with the output meter. It can be alined by the visual method, using a frequency-modulated (f-m) signal generator and cathode-ray oscilloscope as described in paragraph 100.

96. A-V-C Alinement Procedure

Leaving all other controls as directed above, and without changing the signal generator frequency, reduce the AUDIO GAIN to 0, switch to AVC, and increase SENSITIVITY to 10. Increase AUDIO GAIN to restore half-scale reading on the output meter and adjust the single trimmer capacitor in T6 for *minimum* output meter reading. The S-meter reading should peak at the same time the output meter dips.

97. Beat-frequency Oscillator Alinement Procedure

Continuing with the controls set as above, disconnect the output meter and plug in a pair of headphones, or replace the meter with a suitable loudspeaker such as Loudspeaker LS–3. Remove the modulation from the signal generator. Throw the SIGNAL MOD-CW switch to CW and make sure that the BEAT OSCILLATOR control is exactly on 0. If the tone in the headphones or speaker is not very low in pitch, readjust the trimmer capacitor near the bottom of T5 until it is. If the bfo is in perfect alinement when this test is made, no sound will be heard, since the signal generator and the bfo will be oscillating at the same frequency and there will be no audible difference or beat. Check this by turning the BEAT OSCILLATOR control knob slightly off 0 toward one side or the other. If this brings a tone rising in pitch as the pointer is turned away from 0 to either side, the bfo is perfectly alined.

98. H-F Oscillator Calibration Procedure

a. The accuracy of the MAIN TUNING dial calibration depends solely on the h-f oscillator operating frequency, which in these receivers is 465 kc (the i-f frequency) *higher* than the signal frequency, except the 20- to 40-mc band of Receiver BC–794–B, in which instance the h-f oscillator is 465 kc *below* the signal frequency. For example, when the receiver is tuned to a 10.0-mc signal, the frequency of the h-f oscillator must be 10.465 mc. Although the frequency of the h-f oscillator can be measured directly if accurate frequency-measuring equipment is on hand, it is far simpler to check it by tuning in signals of known frequency and noting the MAIN TUNING dial readings. If the readings do not agree with the known frequency of the signals being received, the calibration is off.

Caution: Be sure the BAND SPREAD dial is set at 100 when making this test.

b. To correct dial calibration, refer to an alinement chart, figure 46, 47, 48, or 49 for the location of the h-f oscillator adjustments as well as the signal frequencies at which the settings should be made. If the 2.5- to 5.0-mc band is to be corrected, the signal generator may be *accurately* set to 2.5 mc and its second harmonic (if strong enough) used for the 5.0-mc end of the band. In either case, whether the 5.0-mc frequency is the fundamental or second harmonic, the 5.0-mc frequency *must* be accurate. This requires that the setting of the signal generator be accurately adjusted by the use of a frequency meter as described in paragraph 94. The output of the signal generator should be unmodulated and the SIGNAL MOD-CW switch on the receiver turned to CW. Set the BEAT OSCILLATOR control at 0, the AUDIO GAIN at 10, and the AVC-MANUAL switch on MANUAL. Disconnect the output meter and use headphones or loudspeaker to make the necessary adjustments by the zero beat method. Connect the signal generator to the antenna terminals for this test.

c. Set the receiver MAIN TUNING dial to the 5.0-mc end and then tune it to zero beat with the 5.0-mc output of the accurately calibrated signal generator. Notice the approximate dial error. Then turn the MAIN TUNING dial slightly toward the 5.0-mc calibration line until the beat note rises to a high pitch. Do not turn the dial far enough to raise the beat note so high that you cannot hear it. With the alinement screw driver adjust the trimmer capacitor marked H-F OSC–5.0 MC (fig. 46, 47,

ManualsPlus.com

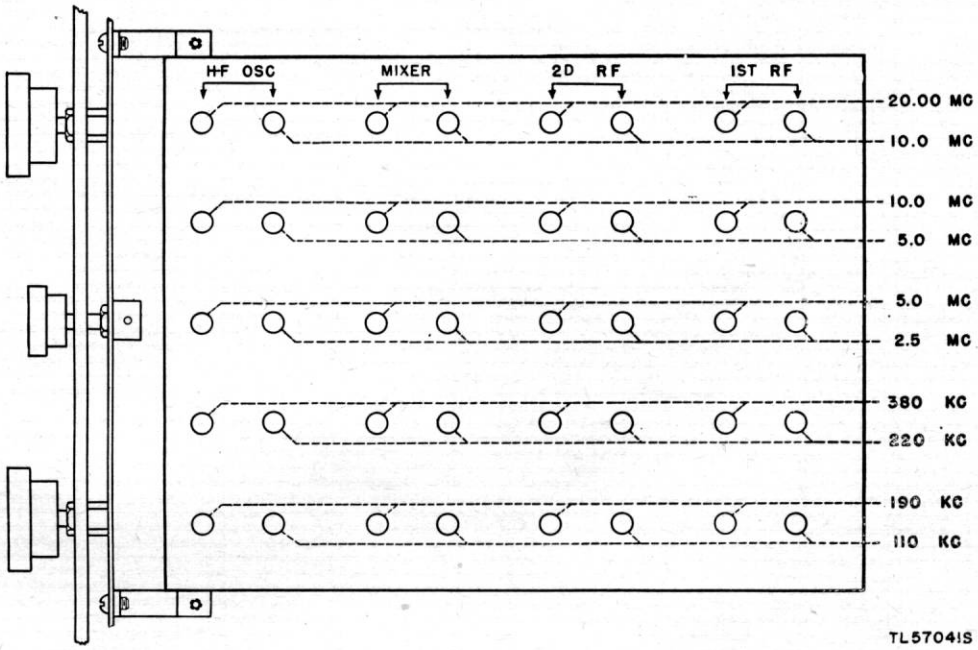

Figure 46. Radio Receiver BC-779-(*), alinement chart.

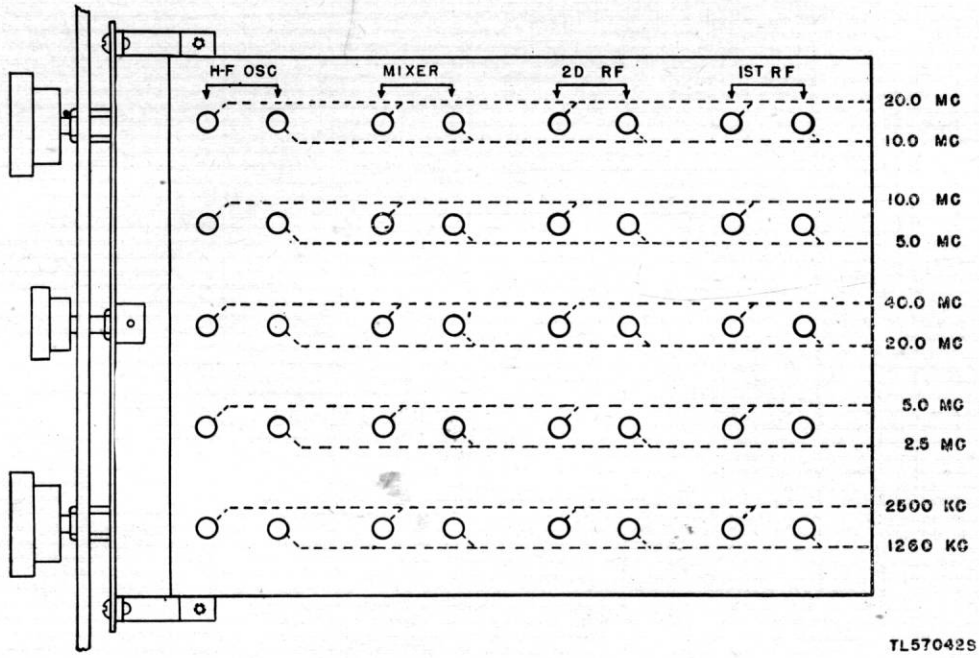

Figure 47. Radio Receiver BC-794-(*), alinement chart.

ManualsPlus.com

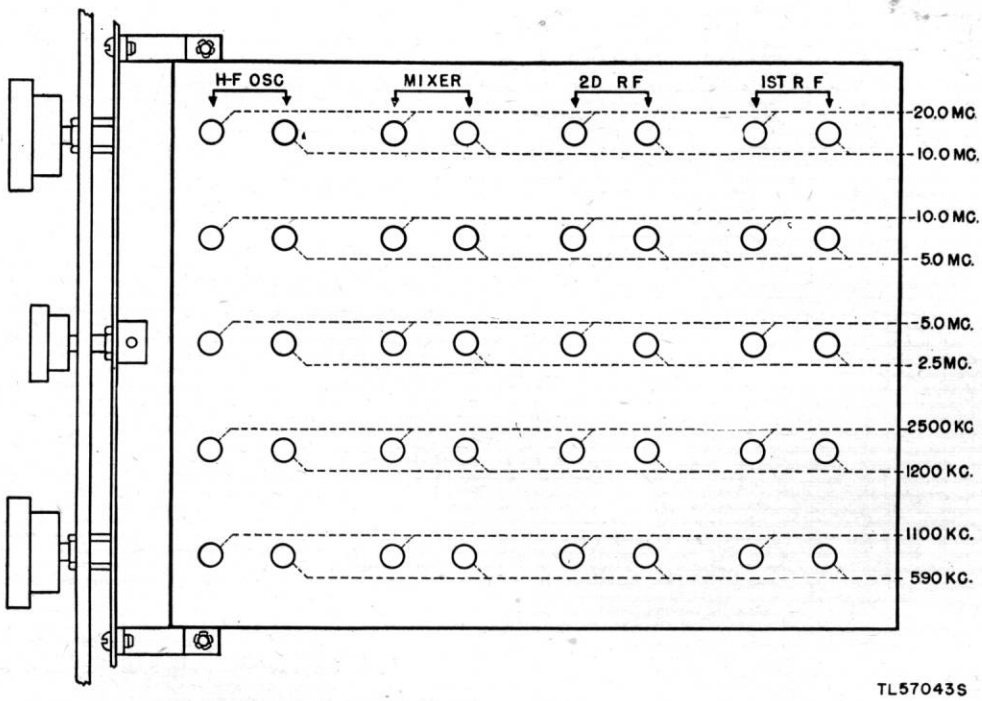

Figure 48. Radio Receiver BC–1004–(*), alinement chart.

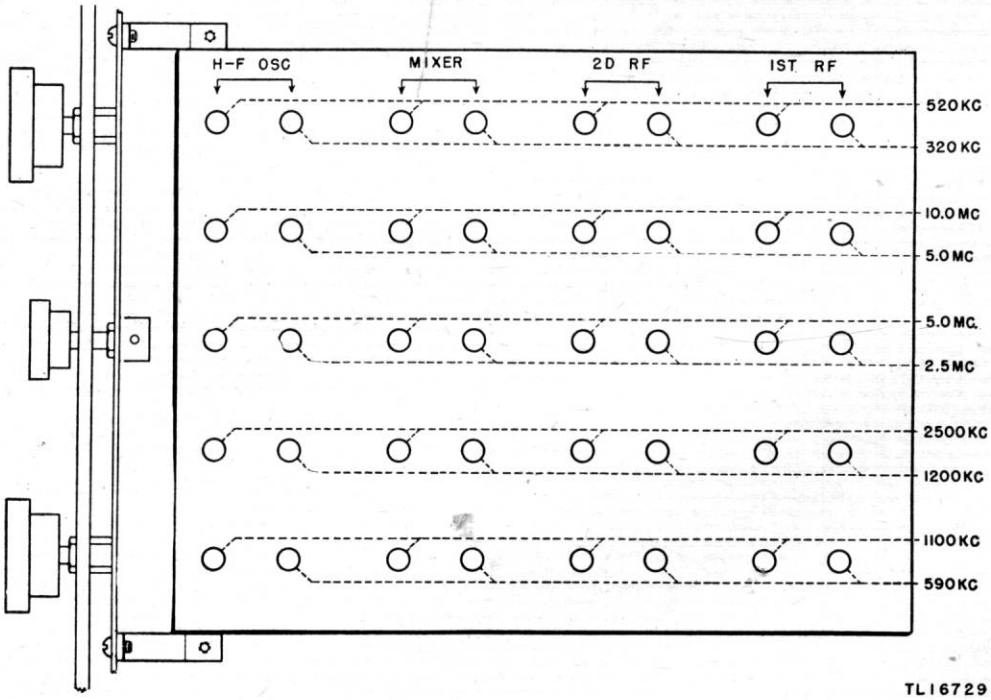

Figure 49. Radio Receiver R–129/U, alinement chart.

ManualsPlus.com

48, or 49) until the beat note is again zero. Turn the MAIN TUNING dial still farther toward the 5.0-mc line and make a further adjustment of the trimmer capacitor to return to zero beat. Repeat this procedure as many times as necessary to bring the dial to exactly 5.0 mc. (It is evident that the dial could be set at once on exactly 5.0 mc and the trimmer turned enough at one time to produce zero beat, but the step-by-step method is recommended). Accurately set the signal generator to 2.5 mc by calibrating it with the frequency meter. Then tune in the 2.5-mc signal at the l-f end of the MAIN TUNING dial and correct the calibration step-by-step, as before, using the inductance trimming adjustment H-F OSC-2.5 MC (fig. 46, 47, 48, or 49). Accurately set the signal generator for an output of 5 mc again, and tune the receiver to this frequency. It will be found that the adjustment of the inductance at 2.5 mc has changed the correction previously made at 5.0 mc. This is perfectly normal, because an adjustment at one end of the dial also affects the other end of the band. It will therefore be necessary to go back and forth several times from 2.5 to 5.0 mc in order to bring both ends of the dial scale into exact agreement with the signal frequency. Be sure that the signal generator is always *accurately* set.

Caution: During this adjusment be very careful to adjust the SENSITIVITY control so as to avoid overloading or to cause the reception of undesired signals.

d. After the r-f and mixer circuits have been alined (par. 99), check and aline the other bands in a similar manner, if necessary.

99. R-F and Mixer Alinement Procedure

a. Although the alinement of the 1st and 2d r-f and mixer circuits can be checked at the same time as the h-f oscillator circuit, it is simpler to consider each check as a separate operation. Efficient weak-signal reception, with low receiver noise level and high image rejection ratios, depends on the relative alinement of these three circuits with respect to the h-f oscillator and without regard to calibration accuracy. As long as these circuits are adjusted to resonate at a frequency 465 kc lower than that of the h-f oscillator, good results will be obtained.

b. Accurate calibration of the signal generator is not required to check these adjustments. Modulation of the signal generator, while convenient, is not strictly necessary. The input to the antenna terminals should be through approximately 100 ohms, including the output resistance of the signal generator. If the signal generator is modulated, set the receiver controls as for i-f alinement; if unmodulated, set the BEAT OSCILLATOR knob to 2 (on either side) and throw SIGNAL MOD-CW switch to CW. Adjust the SENSITIVITY control to produce a half-scale reading on the output meter when signals are exactly in tune.

c. Starting with the 2.5- to 5.0-mc band, set the MAIN TUNING dial at 5.0 mc (band spread dial at 100) and adjust the frequency of the signal generator for peak deflection of the output meter. Then check and adjust the setting of the trimmer marked MIXER and 5.0 MC in figure 46, 47, 48, or 49 for maximum reading on the output meter. Repeat this procedure on trimmers indicated as 2D RF and 1ST RF in the same row. If readjustments on one of these settings result in a sizable increase in output meter reading, slightly alter the SENSITIVITY control to reduce the reading to half-scale. After each adjustment check the tuning of the receiver to make sure that the test signal is still accurately tuned. The BAND SPREAD control may be used as a vernier for this purpose in those bands in which it operates (par. 15*c*). *This tuning check is extremely important at the high end of the 10- to 20-mc and 20- to 40-mc bands where there is some slight interaction between the mixer and h-f oscillator circuit.* After checking the three trimmers at the high end of this band, turn the MAIN TUNING dial to 2.5 mc and retune the signal generator to suit. Then check the three inductance adjuster settings marked 2.5 mc in the same row. Since adjustments at one end of a band also affect the other end of that band, it will be necessary to repeat the above procedure until no further improvement can be secured. The number of repetitions necessary will depend on how much mistuning existed to start with. Check the rest of the bands in the same manner.

d. For best possible efficiency with a particular antenna arrangement, the 1st r-f circuits may be adjusted without disconnecting the antenna. This can be done by loosely coupling the output of the signal generator to the antenna system instead of directly to the antenna terminals through a 100-ohm resistor. Make sure that the signal from the signal generator actually reaches the receiver by way of the antenna rather than by some form of direct coupling.

e. In all the foregoing tests using output meter readings for circuit adjustment, it is recommended that headphones (or speaker) be used to monitor

ManualsPlus.com

the signal. In this way false adjustments due to overloading and undesired reception of strong signals may be avoided.

100. L27 Alinement Procedure

The following method of visually alining grid coil L27 requires an f-m signal generator with a 465-kc output and an oscilloscope. If this equipment is available, proceed as in steps *a* through *d* below; otherwise, see step *e* below. Any f-m signal generator to be used for visual alinement should be checked for the presence of strong amplitude modulation in the output. This may be accomplished by using the lowest r-f frequency of the f-m signal generator, modulated at 400 cps, by connecting the r-f output cable to the vertical plates of the oscilloscope, and by stabilizing the pattern by the choice of the correct horizontal sweep frequency. The top and bottom of the oscilloscope pattern should be level. Any waveform observed above and below the average carrier level observed represents amplitude modulation which will result in erroneous visual alinement patterns. The f-m signal generator deviation should be reduced until a level pattern is observed. In no case should the deviation be less than 5 kc. If amplitude modulation cannot be eliminated from the f-m signal generator output, do not perform visual alinement.

a. Connect the input of the vertical amplifier of the oscilloscope to the PHONO connections on terminal strip E3 on the rear skirt of the receiver chassis. The *high* terminal is the second one from the end of the strip; the first terminal is connected to the chassis. Use external synchronizing voltage from the signal generator for horizontal sweep.

b. Set the f-m signal generator to approximately 465 kc and connect its output to the control grid cap of mixer V3 through a fixed capacitor (100 mmf or larger).

c. With the CRYSTAL SELECTIVITY switch at OFF, readjust the signal generator frequency to produce the conventional single-peaked resonance curve on the screen of the oscilloscope. Turn the CRYSTAL SELECTIVITY switch to 3 and touch up the adjustments of T1, T2, T3, and T4 for maximum gain. Turn the CRYSTAL SELECTIVITY switch to OFF and note the waveform, which should be symmetrical.

d. Turn the CRYSTAL SELECTIVITY switch to position 1. If grid coil L27 is correctly tuned, the image on the oscilloscope screen will remain symmetrical but will be only about two-thirds as wide as before, indicating an increase in selectivity. The oscilloscope image is also affected by the PHASING control, maximum symmetry occurring at or very near the arrow in its scale. Therefore, when tuning L27, rock the PHASING control back and forth at the same time to secure best adjustment.

e. If an f-m signal generator with a 465-kc output is not available, an f-m signal generator with an output to which the receiver can be tuned, such as Signal Generator I–208, may be used. The output of the signal generator is connected to the A terminal of the receiver. Except for the signal frequency and connection of the signal generator, the method of alinement is the same as through *d* above.

ManualsPlus.com

APPENDIX I

REFERENCES

Note. For availability of items listed, check FM 21-6 and Supply Catalog SIG 1 and 2. Also see latest issue of FM 21-6 for applicable technical bulletins, supply bulletins, modification work orders, and changes thereto.

1. Army Regulations

AR 380-5 Safeguarding Military Information.

2. Supply Publications

SIG 1 & 2	Introduction and Index.
SIG 6 series (supply catalogs)	Sets of Equipment.
SIG 7 & Series (supply catalogs)	Organizational Maintenance Allowances, and Field and Base Maintenance Stockage Guide.
SIG 7-8-10 series (supply catalogs)	Organizational Maintenance Allowances, and Field and Base Maintenance Stockage Guide (Including Fixed Plant Maintenance Lists).
SIG 10-6 (supply catalogs)	Fixed Plant Maintenance Lists.
SB 11-6	Dry Battery Supply Data.
SB 11-76	Signal Corps Kit and Materials for Moisture- and Fungi-Resistant Treatment.
SB 11-17	Electron Tube Supply and Reference Data.

3. Technical Manuals on Auxiliary Equipment and Test Equipment

TM 11-300	Frequency Meter Sets SCR-211-( ).
TM 11-303	Test Sets I-56-C, -D, -H, and -J.
TM 11-307	Signal Generators I-72-G, -H, -J, and -K.
TM 11-317	Signal Generator I-208.
TM 11-321	Test Set I-56-E.
TM 11-2613	Voltohmmeter I-166.
TM 11-2626	Test Unit I-176.
TM 11-2627	Tube Tester I-177.
TM 11-430	Storage Batteries for Signal Communication, Except Those Pertaining to Aircraft.

4. Painting, Preserving, and Lubrication

TB SIG 13	Moistureproofing and Fungiproofing Signal Corps Equipment.
TB SIG 69	Lubrication of Ground Signal Equipment.

5. Camouflage

FM 5-20 Camouflage, Basic Principles.

6. Packaging and Packing Instructions

a. Joint Army-Navy Packaging Specifications.

JAN-D-169	Desiccants, Activated.
JAN-P-100	General Specifications.
JAN-P-106	Boxes, Wood, Nailed.
JAN-P-116	Preservation, Methods of.
JAN-P-125	Barrier Material, Waterproof.
JAN-P-131	Barrier Material, Moisture-Vaporproof, Flexible.

b. U. S. Army Specification.

100-2E Marking Shipments by Contractors (and Signal Corps Supplement thereto).

c. Signal Corps Instructions.

720-7 Standard Pack.
726-15 Interior Marking.

7. Decontamination

TM 3-220 Decontamination.

8. Demolition

FM 5-25 Explosives and Demolitions.

ManualsPlus.com

9. Other Publications

FM 21–6	List and Index of War Department Publications.
FM 24–18	Radio Communication.
FM 72–20	Jungle Warfare.
MWO SIG 11–866–1	Modification of Radio Receiver BC–779–A (Super Pro Receiver, Howard Model): To Prevent Excessive Failures of Bypass Capacitors.
MWO SIG 11–866–2	Modification of Power Supply Units RA–74, –B, and –C; RA–84, –A, and –B; and RA–94 and –A: To Prevent Damage in Handling and Shipping.
MWO SIG 11–866–3	Modification of Radio Receivers BC–779, –A, and –B; BC–794, –A, and –B; BC–1004, –B, –C, and –D; Power Supply Units RA–74, –B, and –C; RA–84, –A, and –B; RA–94 and –A: To Prevent Damage to Radio Equipment in Vehicular Installations by Providing Shock Mounts.
MWO SIG 11–866–4	Modification of Radio Receivers BC–779–(*), BC–794–(*), and BC–1004–(*): To Provide for Improved Stability of High-Frequency Oscillator Circuit.
SB 11–70	Replacement of Paper Dielectric Capacitor in Radio Receivers BC–779–( ), BC–794–( ), and BC–1004–( ).
TB SIG 4	Methods for Improving the Effectiveness of Jungle Radio Communication.
TB SIG 5	Defense against Radio Jamming.
TB SIG 25	Preventive Maintenance of Power Cords.
TB SIG 66	Preventive Maintenance of Signal Equipment.
TB SIG 72	Tropical Maintenance of Ground Signal Equipment.
TB SIG 75	Desert Maintenance of Ground Signal Equipment.
TB SIG 178	Preventive Maintenance Guide for Radio Communication Equipment.
TM 11–310	Schematic Diagrams for Maintenance of Ground Radio Communication Sets.
TM 11–314	Antennas and Antenna Systems.
TM 11–453	Shop Work.
TM 11–455	Radio Fundamentals.
TM 11–483	Supression of Radio Noises.
TM 11–499	Radio Propagation Handbook.
TB 11–499–( )*	Basic Radio Propagation Predictions.
TM 11–4000	Trouble Shooting and Repair of Radio Equipment.
TM 11–4054	Radio Receivers BC–779–A and –B; BC–794–A and –B; BC–1004–A, –B, –C, and –D; and R–129/U; Repair Instructions.
TM 38–650	Basic Maintenance Manual.

10. Forms

WD AGO Form 468 (Unsatisfactory Equipment Report).
AAF Form 54 (Unsatisfactory Report).

11. Abbreviations and Symbols

a-c	alternating-current
a-f	audio-frequency
a-m	amplitude-modulated
amp	ampere
avc	automatic volume control
c-w	continuous-wave
bfo	beat frequency oscillator
cps	cycles per second
dc	direct current
f-m	frequency-modulated

*A new TB in this series is issued monthly, giving propagation predictions 3 months in advance.

ManualsPlus.com

h-f	high-frequency
i-f	intermediate-frequency
kc	kilocycle
l-f	low-frequency
mc	megacycle
meg	megohm
mf	microfarad
mmf	micromicrofarad
muv	microvolt
mw	milliwatt
R-C	resistance-capacitance
r-f	radio-frequency
v	volt
Δ	variation or change

12. Glossary

Refer to glossary in TM 11–455.

ManualsPlus.com

APPENDIX II

IDENTIFICATION TABLE OF REPLACEABLE PARTS

1. Department of the Army Supply Catalog References

The following information was compiled on 4 December 1947. The appropriate pamphlets of the Department of the Army Supply Catalog for Radio Receivers BC–779, BC–794, BC–1004, and R–129/U (Hammarlund Super Pro), Power Supply Units RA–74, RA–84, and RA–94, and Radio Sets SCR–244 and SCR–704 are:

Organizational Maintenance Allowances, and Field and Base Maintenance Stockage Guide (Including Fixed Plant Maintenance Lists)

SIG 7–8–10 BC–779
SIG 7–8–10 BC–794
SIG 7–8–10 BC–1004 (when published)
SIG 10 R–129/U (when published) (Fixed Plant Maintenance List only)
SIG 7–8–10 RA–74 (when published)
SIG 7–8–10 RA–84 (when published)
SIG 7–8–10 RA–94 (when published)
SIG 7–8–10 SCR–244 (when published)
SIG 7–8–10 SCR–704 (when published)

For an index of available supply catalog pamphlets, see the latest issue of Supply Catalog SIG 1 & 2.

2. Identification Table of Replaceable Parts for Radio Sets SCR–244–A and SCR–244–B

Note. The following list covers organizational and field maintenance parts. Refer to paragraph 1 above for appropriate supply catalog pamphlets

Models		Name and description of part	Function of part	Signal Corps stock No.
SCR 244–A	SCR–244–B			
*	*	CABLE, RF: Sig C Wire W–151; twisted pair; 2 #18 AWG stranded cond; RC w/weather-proof outer braid.	Antenna lead-in	1B151
*	*	CORD CD–605: headset; 2 tinsel cond; RC; 6 ft 6″ lg; w/Sig C Transformer C–410 one end; Sig C Plug PL–55, 2 cond telephone plug other end; Sig C spec No. 71–1525.	Headset HS–30	3E1605–6.5
*	*	CORD CD–874: headset; 2 stranded cond; RC; 6 ft 6″ lg; w/Sig C Plug PL–55, 2 cond telephone plug one end; Sig C Junction Box JB–47 other end.	Headset HS–30	3E1874
*	*	HEADSET HS–30: radio and telephone; magnetic; impedance approx 250 ohms; 2 receivers 0.9″ diam x 0.68″ h; headband 6⅛″ max wd; w/cord and 2 Sig C Inserts M–300; Sig C spec No. 271–1518.	Headset HS–30	2B830
*	*	INSULATOR IN–124: transposition; transposition block, center connection of double doublet antenna.	Insulator	3G624
*	*	INSULATOR IN–125: strain; round, rectangular; white glazed ceramic; 4″ lg x ¾″ diam; ¼″ diam holes ea end.	Insulator	3G625
*	*	ROPE RP–3: cotton; braided; 11/64″ max diam; No. 5; white; Sig C spec No. 71–217.	Antenna support	6Z7925
*	*	WIRE W–152: electrical; insulated; single #12 AWG cond; copper, E; stranded, 7 #20 AWG strands; E insulation.	Antenna	1B152

*An asterisk in the *Models* column means that the item is part of the model indicated.

ManualsPlus.com

3. Identification Table of Replaceable Parts for Radio Set SCR–704

Note. The following list covers organizational and field maintenance parts. Refer to paragraph 1 of this appendix for appropriate supply catalog pamphlets.

Name and description of part	Function of part	Signal Corps stock No.
CABLE, RF: Sig C Wire W–151; twisted pair; 2 #18 AWG stranded cond; RC, w/weatherproof outer braid.	Antenna lead-in	1B151
CORD CD–605; headset; 2 tinsel cond; RC; 6 ft 6″ lg; w/Sig C transformer C–410 one end; Sig C Plug PL–55, 2 cond telephone plug other end; Sig C spec No. 71–1525.	Headset HS–30	3E1605–6.5
CORD CD–874: headset; 2 stranded cond; RC; 6 ft 6″ lg; w/Sig C Plug PL–55, 2 cond telephone plug one end; Sig C Junction Box JB–47 other end.	Headset HS–30	3E1874
HEADSET HS–30: radio and telephone; magnetic; impedance approx 250 ohms; 2 receivers 0.90″ diam x 0.68″ h; headband 6⅛″ max wd; w/cond and 2 Sig C Inserts M–300; Sig C spec No. 271–1518.	Headset HS–30	2B830
INSULATOR IN–124: transposition; transposition block, center connection of double doublet antenna.	Insulator	3G624
INSULATOR IN–125: strain; round, rectangular; white, glazed ceramic; 4″ lg x ¾″ diam; ¼″ diam holes ea end.	Insulator	3G625
ROPE RP–3: cotton; braided; 11/64″ max diam; No. 5; white; Sig C spec No. 71–217.	Antenna support	6Z7925
WIRE W–152: electrical; insulated; single #12 AWG cond; copper E; stranded, 7 #20 AWG strands; E insulation.	Antenna	1B152

4. Identification Table of Replaceable Parts for Radio Receivers BC–779–A and –B; BC–794–A and –B; BC–1004–B, –C, and –D; and R–129/U

Note. The following list covers organizational and field maintenance parts. Refer to paragraph 1 of this appendix for appropriate supply catalog pamphlets.

Ref symbol	Models				Name and description of part	Function of part	Signal Corps stock No.
	BC–779–A, –B	BC–794–A, –B	BC–1004–B, –C, –D	R–129/U			
W2	*	*	*	*	CABLE ASSEMBLY, power: 8 cond, 6 # 20 AWG stranded, 2#16 AWG stranded; black cotton braid covered; ⅝″ OD; 7 ft lg overall; w/Hammarlund No. 3837 or Jones No. 12, 10 term. strip one end; other end stripped and tinned; Hammarlund No. SA–67.	Battery connector cable	2C4528/3–1

* An asterisk in the *Models* column means that the item is part of the model indicated.

ManualsPlus.com

Ref symbol	Models: BC-779-A, -B	BC-794-A, -B	BC-1004-B, -C, -D	R-129/U	Name and description of part	Function of part	Signal Corps stock No.
W 1	*	*	*	*	CABLE ASSEMBLY, power: 9 cond, 7 #20 AWG stranded, 2 #16 AWG stranded; black cotton braid covered; 5/8" OD; 7 ft lg overall; w/Hammarlund No. 3837 or Jones No. 12, 10 term. strip ea end; Hammarlund No. SA-35.	Power supply connector cable.	2C4528/3
C26	*	*	*	*	CAPACITOR, fixed: mica; 51 mmf ±5%; 500 vdcw; max body dimen 51/64" lg x 15/32" wd x 7/32" thk; JAN type CM20B510J.	V8 cathode bypass.....	3K2051022
C15	*	*	*	*	CAPACITOR, fixed: silver mica; 51 mmf ±5%; 500 vdcw; max body dimen 51/64" lg x 15/32" wd x 7/32" thk; JAN type CM20C510J.	V4 grid coupling.....	3K2051032
C13	*	*	*	*	CAPACITOR, fixed: silver mica; 91 mmf ±2%; 500 vdcw; max body dimen 51/64" lg x 15/32" wd x 7/32" thk; JAN type CM20C910G.	V3 injection grid coupling..	3K2091033
C3, C7, C11	*	*	*	*	CAPACITOR, fixed mica; 620 mmf ±5%; 500 vdcw; body dimen 1 1/16" lg x 15/32" max wd x 7/32" max thk; JAN type CM25B621J.	V1, V2, V3 grid coupling...	3K2562122
C4, C5, C8, C9, C10, C12, C14, C16	*	*	*	*	CAPACITOR, fixed: paper; 10,000 mmf ±20%; 400 vdcw; molded Bakelite case; 1 3/8" lg x 41/64" wd x 9/32" thk; wax impregnated; JAN type CN41A103M.	Bypass	3DA10-390
C24	*	*	*	*	CAPACITOR, fixed: paper; 20,000 mmf ±10%; 600 vdcw; HS metal case; max body dimen 1 11/16" lg x 9/16" diam; oil impregnated; JAN type CP28A1FF203K.	V13 grid coupling.....	3DA20-188
C57, C58		*			CAPACITOR, fixed: silver mica; 300 mmf ±2%; 500 vdcw; max body dimen 51/64" lg x 15/32" wd x 7/32" thk; JAN type CM20C301G.	V1, V2 plate coupling.....	3K2030133
C6	*		*	*	CAPACITOR, fixed: paper; 10,000 mmf ±20%; 400 vdcw; molded Bakelite case; 1 3/8" lg x 41/64" wd x 9/32" thk; wax impregnated; JAN type CN41A103M.	V1 plate bypass.....	3DA10-390
C25, C27, C29	*	*	*	*	CAPACITOR, fixed: paper; 50,000 mmf ±10%; 600 vdcw; HS metal case; max body dimen 1 13/16" lg x 1 1/16" diam; oil impregnated; JAN type CP28A1FF503K.	V14 grid coupling.....	3DA50-299
C18, C19, C20	*	*	*	*	CAPACITOR, fixed: paper; 3 sect; 50,000 −50,000 −50,000 mmf +20% −10%; 600 vdcw; HS metal case; max body dimen 1 13/16" lg x 1" wd x 3/4" h; oil impregnated; JAN type CP53B5FF503V.	Bypass	3DA50-298

* An asterisk in the *Models* column means that the item is part of the model indicated.

ManualsPlus.com

Ref symbol	Models				Name and description of part	Function of part	Signal Corps stock No.
	BC-779-A, -B	BC-794-A, -B	BC-1004-B, -C, -D	R-129/U			
C17	*	*	*	*	CAPACITOR, fixed: paper; 250,000 mmf ±10%; 600 vdcw; HS metal case; max body dimen 2 5/16" lg x 1 1/16" diam; oil impregnated; JAN type CP28A1FF254K.	Extra a-v-c timing for cw..	3DA250-379
C31	*	*	*	*	CAPACITOR, fixed: paper; 2 sect; 250,000 −250,000 mmf +20% −10%; 600 vdcw; HS metal case; max body dimen 2" lg x 1 3/4" wd x 7/8" h; oil impregnated; JAN type CP53B4FF254V.	Bypass	3DA250-378
C28	*	*	*	*	CAPACITOR, fixed: electrolytic; 40 mf ±10%; 150 vdcw; 2 3/16" lg x 13/16" diam; aluminum case w/cardboard insulating tube outside; pos term. lead riveted to insulating end disk; self-supporting; Aerovox No. PRS-150; Hammarlund No. 6171.	V15, V16 cathode bypass...	3DB40-11
C32	*	*	*	*	CAPACITOR, variable: air; 2 sect; 3 to 6 mmf per sect; 1 15/16" x 15/16" w/1/4" base; slotted screw driver adj; 3 plates per sect; ceramic insulation; 2 mtg studs No. 4-40 x 0.187" lg, 21/32" centers; Hammarlund No. SA-179.	Crystal filter phasing	3D9006V-17
C30	*				CAPACITOR, fixed: paper; 250,000 mmf ±10%; 600 vdcw; HS metal case; max body dimen 2 5/16" lg x 1 1/16" diam; oil impregnated; JAN type CP28A1FF254K.	Bias supply bypass.....	3DA250-379
H3	*	*	*	*	CLAMP: meter; brass; nickel-plated; single bolt locking, screw driver adj; 2" OD x 1 7/8" ID; 2" diam; Weston No. D-54108; Hammarlund No. 3926.	S meter mounting.....	3F2640
L4	*				COIL, RF: antenna pri input; single winding; unshielded; phenolic form; 100-200 kc w/Faraday shield for separating input from output coil; Hammarlund No. SA-162.	Antenna coupling	2C4528.3/10-4
L5	*				COIL, RF: antenna pri input; single winding; unshielded; phenolic form; 200-400 kc w/Faraday shield for separating input from output coil; Hammarlund No. SA-161.	Antenna coupling	2C4528.3/10-5
L3	*	*	*	*	COIL, RF: antenna pri input; single winding; unshielded; phenolic form; 2.5-5 mc w/Faraday shield for separating input from output coil; Hammarlund No. SA-48.	Antenna coupling	2C4528.3/10-1
L2	*	*	*	*	COIL, RF: antenna pri input; single winding; unshielded; phenolic form; 5-10 mc w/ Faraday shield for separating input from output coil; Hammarlund No. SA-47 .	Antenna coupling	2C4528.3/10-2

* An asterisk in the *Models* column means that the item is part of the model indicated.

ManualsPlus.com

Ref symbol	Models				Name and description of part	Function of part	Signal Corps stock No.
	BC-779-A, -B	BC-794-A, -B	BC-1004-B, -C, -D	R-129/U			
L1	*	*	*		COIL, RF: antenna pri input; single winding; unshielded; phenolic form; 10-20 mc w/Faraday shield for separating input from output coil; Hammarlund No. SA-46.	Antenna coupling	2C4528.3/10-3
L10	*				COIL, RF: antenna secd output, 1st RF grid input; single winding; unshielded; phenolic form; 100-200 kc; Hammarlund No. SA-159.	V1 grid input.....	2C4528.3/8-5
L9	*				COIL, RF: antenna secd output, 1st RF grid input; single winding; unshielded; phenolic form; 200-400 kc; Hammarlund No. SA-160.	V1 grid input.....	2C4528.3/8-6
L8	*	*	*	*	COIL, RF: antenna secd output, 1st RF grid input; single winding; unshielded; phenolic form; 2.5-5 mc; Hammarlund No. SA-116.	V1 grid input.....	2C4528.3/8-2
L7	*	*	*	*	COIL, RF: antenna secd output, 1st RF grid input; single winding; unshielded; phenolic form; 5-10 mc; Hammarlund No. SA-113.	V1 grid input.....	2C4528.3/8-3
L6	*	*	*		COIL, RF: antenna secd output, 1st RF grid input; single winding; unshielded; phenolic form; 10-20 mc; Hammarlund No. SA-110.	V1 grid input.....	2C4528.3/8-4
T5	*	*	*	*	COIL, RF: BFO; single winding, tuned; shielded; 5″ h x 2″ wd x 2″ d; built-in capacitor; tuned from front panel of receiver; 465 kc; Hammarlund No. SA-169A.	V10 circuit	2C4528.7/9
L15, L20	*				COIL, RF: 2d RF grid, 1st detector grid; pri and secd windings, secd tuned; unshielded; phenolic form; tuned w/ext capacitor; ceramic base; 100-200 kc; Hammarlund No. SA-158.	V2, V3 grid input.....	2C4528.3/5-5
L14, L19	*				COIL, RF: 2d RF grid; 1st detector grid; pri and secd windings, secd tuned; unshielded; phenolic form; tunes w/ext capacitor; ceramic base; 200-400 kc; Hammarlund No. SA-157.	V2, V3 grid input.....	2C4528.3/5-6
L13, L18	*	*	*	*	COIL, RF: 2d RF grid; 1st detector grid; pri and secd windings, secd tuned; unshielded; phenolic form; tunes w/ext capacitor; ceramic base; 2.5-5 mc; Hammarlund No. SA-117.	V2, V3 grid input.....	2C4528.3/5-2
L35, L36		*			COIL, RF: choke; 5-pie universal wound; unshielded; 2.1 mh, 35 ohms DC resistance; 1½″ lg x ½″ diam; ceramic core; Hammarlund type CHX.	V1, V2 plate chokes.....	3C308-4

* An asterisk in the *Models* column means that the item is part of the model indicated.

ManualsPlus.com

Ref symbol	Models				Name and description of part	Function of part	Signal Corps stock No.
	BC-779-A, -B	BC-794-A, -B	BC-1004-B, -C, -D	R-129/U			
L12, L17	*	*	*	*	COIL, RF: 2d RF grid; 1st detector grid; pri and secd windings, secd* tuned; unshielded; phenolic form; tunes w/ext capacitor; ceramic base; 5-10 mc; Hammarlund No. SA-114.	V2, V3 grid input.....	2C4528.3/5-3
L11, L16	*	*	*		COIL, RF: 2d RF grid; 1st detector grid; pri and secd windings, secd tuned; unshielded; phenolic form; tunes w/ext capacitor; ceramic base; 10-20 mc; Hammarlund No. SA-111.	V2, V3 grid input.....	2C4528.3/5-4
L25	*				COIL, RF: HF oscillator grid input; single winding, tuned; unshielded; phenolic form; tunes w/ext capacitor; ceramic base; 100-200 kc; Hammarlund No. SA-156.	V4 grid input.....	2C4528.3/9-5
L24	*				COIL, RF: HF oscillator grid input; single winding, tuned; unshielded; phenolic form; tunes w/ext capacitor; ceramic base; 200-400 kc; Hammarlund No. SA-155.	V4 grid input.....	2C4528.3/9-6
L23	*	*	*	*	COIL, RF: HF oscillator grid input; single winding, tuned; unshielded; phenolic form; tunes w/ext capacitor; ceramic base; 2.5-5 mc; Hammarlund No. SA-118.	V4 grid input.....	2C4528.3/9-2
L22	*	*	*	*	COIL, RF: HF oscillator grid input; single winding, tuned; unshielded; phenolic form; tunes w/ext capacitor; ceramic base; 5-10 mc; Hammarlund No. SA-115.	V4 grid input.....	2C4528.3/9-3
L21	*	*	*		COIL, RF: HF oscillator grid input; single winding, tuned; unshielded; phenolic form; tunes w/ext capacitor; ceramic base; 10-20 mc; Hammarlund No. SA-112.	V4 grid input.....	2C4528.3/9-4
L38			*	*	COIL, RF: antenna pri input; single winding; unshielded; phenolic form; 540-1,160 kc w/Faraday shield for separating input from output coil; Hammarlund No. SA-50.	Antenna coupling	2C4528.7/10-6
L37		*	*	*	COIL, RF: antenna pri input; single winding; unshielded; phenolic form; 1,160-2,500 kc w/Faraday shield for separating input from output coil; Hammarlund No. SA-49.	Antenna coupling	2C4528.7/10-7
L40			*	*	COIL, RF: antenna secd output, 1st RF grid input; single winding; unshielded; phenolic form; 540-1,160 kc; Hammarlund No. SA-122.	V1 grid input.....	2C4528.7/8-7
L39			*	*	COIL, RF: antenna secd output, 1st RF grid input; single winding; unshielded; phenolic form; 1,160-2,500 kc; Hammarlund No. SA-119.	V1 grid input.....	2C4528.7/8-8

* An asterisk in the *Models* column means that the item is part of the model indicated.

ManualsPlus.com

Ref symbol	Models				Name and description of part	Function of part	Signal Corps stock No.
	BC-779-A, -B	BC-794-A, -B	BC-1004-B, -C, -D	R-129/U			
L42, L44			*	*	COIL, RF: 2d RF grid, 1st detector grid; pri and secd windings, secd tuned; unshielded; phenolic form; tunes w/ext capacitor; ceramic base; 540-1,160 kc; Hammarlund No. SA-123.	V2, V3 grid input.....	2C4528.7/5-7
L41, L43			*	*	COIL, RF: 2d RF grid, 1st detector grid; pri and secd windings, secd tuned; unshielded; phenolic form; tunes w/ext capacitor; ceramic base; 1,160-2,500 kc; Hammarlund No. SA-120.	V2, V3 grid input.....	2C4528.7/5-8
L46			*	*	COIL, RF: HF oscillator grid input; single winding, tuned; unshielded; phenolic form; tunes w/ext capacitor; ceramic base; 540-1,160 kc; Hammarlund No. SA-124.	V4 grid input.....	2C4528.7/9-7
L45			*	*	COIL, RF: HF oscillator grid input; single winding, tuned; unshielded; phenolic form; tunes w/ext capacitor; ceramic base; 1,160-2,500 kc; Hammarlund No. SA-121.	V4 grid input.....	2C4528.7/9-8
L47		*			COIL, RF: antenna pri input; single winding; unshielded; phenolic form; 10-20 mc w/ Faraday shield for separating input from output coil; Hammarlund No. SA-46.	Antenna coupling	2C4528.3/10-3
L48		*			COIL, RF: antenna secd output, 1st RF grid input; single winding; unshielded; phenolic form; 20-40 mc; Hammarlund No. SA-130.	V1 grid input.....	2C4528.8/8-2
L49, L50		*			COIL, RF: 2d RF grid, 1st detector grid; pri and secd windings, secd tuned; unshielded; phenolic form; tunes 4/ext capacitor; ceramic base; 20-40 mc; Hammarlund No. SA-131.	V2, V3 grid input.....	2C4528.8/5-2
L51		*			COIL, RF: HF oscillator grid input; single winding, tuned; unshielded; phenolic form; tunes w/ext capacitor; ceramic base; 20-40 mc; Hammarlund No. SA-132.	V4 grid input.....	2C4528.8/9-2
L52		*			COIL, RF: antenna secd output, 1st RF grid input; single winding; unshielded; phenolic form; 1,250-2,500 kc; Hammarlund No. SA-136.	V1 grid input.....	2C4528.8/8-1
L53, L54		*			COIL, RF: 2d RF grid, 1st detector grid; pri and secd windings, secd tuned; unshielded; phenolic form; tunes w/ext capacitor; ceramic base; 1,250-2,500 kc; Hammarlund No. SA-137.	V2, V3 grid input.....	2C4528.8/5-1

* An asterisk in the *Models* column means that the item is part of the model indicated.

ManualsPlus.com

Ref symbol	Models				Name and description of part	Function of part	Signal Corps stock No.
	BC-779-A, -B	BC-794-A, -B	BC-1004-B, -C, -D	R-129/U			
L55		*			COIL, RF: HF oscillator grid input; single winding, tuned; unshielded; phenolic form; tunes w/ext capacitor; ceramic base; 1,250-2,500 kc; Hammarlund No. SA-138.	V4 grid input	2C4528.8/9-1
L1				*	COIL, RF: antenna pri input; single layer, universal wound; unshielded; phenolic form; 300-540 kc; Hammarlund No. SA-200.	Antenna coupling	2C4180-129/1
L6				*	COIL, RF: antenna secd output, 1st RF grid input; 3-pie universal wound; unshielded; phenolic form; 300-540 kc; includes 11-mmf silver mica fixed capacitor; Hammarlund No. SA-201.	V1 grid input	3C308-17
L11, L16				*	COIL, RF: 2d RF grid, 1st detector grid; pri and secd windings, secd tuned; unshielded; phenolic form; tunes w/ext capacitor; ceramic base; 300-540 kc; Hammarlund No. SA-202.	V2, V3 grid input	3C308-18
L21				*	COIL, RF: HF oscillator grid input; 2-pie universal wound; unshielded; phenolic form; 300-540 kc; includes one 190-mmf and one 50-mmf silver mica fixed capacitor; Hammarlund No. SA-203.	V4 grid input	3C308-16
Y1	*	*	*	*	CRYSTAL UNIT, quartz: one crystal plate; 465 kc; RCA No. M1-19453 per Hammarlund No. SA-178.	Crystal selectivity	2X27-465
N1	*				DIAL: band change sw; black Bakelite knurled knob w/etched aluminum round disk; knob 1⅝" diam, disk 2⅛" diam x 1/16" thk; shaft ¼" diam w/2 setscrews; marked scale 100-200 kc, 200-400 kc, 2.5-5.0 mc, 5.0-10 mc, 10-20 mc; Hammarlund No. SA-163.	Band change switch	2Z5836.5
N3	*	*	*	*	DIAL: band spread indicator; w/mtg disk and hub; plastic; 0-100 divisions; 6" diam; Hammarlund No. SA-27.	Band spread tuning	2C4528/13
N2	*				DIAL: main tuning indicator; calibrated dial and masking disk; scales for 100-200 kc; 200-400 kc; 2.5-5.0 mc; 5-10 mc; 10-20 mc; 6" diam; Hammarlund No. SA-164.	Main tuning	2C4528.3/14
N4	*	*	*	*	DRIVE, dial: main tuning and band spread; includes bearing, shaft, and driving disk; bearing 61/64" lg x 5/16" diam; shaft ½"-32 x 2" lg; disk 1½" diam; Hammarlund No. SA-199.	Main and band spread dial drive.	2C4779B/D1

* An asterisk in the *Models* column means that the item is part of the model indicated.

ManualsPlus.com

Ref symbol	Models: BC-779-A, -B	BC-794-A, -B	BC-1004-B, -C, -D	R-129/U	Name and description of part	Function of part	Signal Corps stock No.
N5		*			DIAL: band change sw; black Bakelite knurled knob w/etched aluminum round disk; knob 1⅝″ diam, disk 2⅛″ diam x 1/16″ thk; shaft ¼″ diam w/2 setscrews; marked scale 1,250-2,500 kc, 2.5-5.0 mc, 5.0-10 mc, 10-20 mc, and 20-40 mc; Hammarlund No. SA-134.	Band change switch.....	2Z5836.3
N6		*			DIAL: main tuning indicator; calibrated dial and masking disk; scales 1,250-2,500 kc, 2.5-5.0 mc, 5.0-10.0 mc, 10-20 mc, 20-40 mc; 6″ diam; Hammarlund No. SA-164.	Main tuning	2C4528.3/14
N7			*		DIAL: band change sw; black Bakelite knurled knob w/etched aluminum round disk; knob 1⅝″ diam, disk 2⅛″ diam x 1/16″ thk; shaft ¼″ diam w/2 setscrews; marked scale 540-1,160-2,500 kc, 2.5-5.0 mc, 5.0-10 mc, and 10-20 mc; Hammarlund No. SA-74.	Band change switch.....	2Z5836.4
N8			*		DIAL: main tuning indicator; calibrated dial and masking disk; scales 540-1,160 kc, 1,160-2,500 kc, 2.5-5.0 mc, 5-10 mc, and 10-20 mc; 6″ diam; Hammarlund No. SA-25.	Main tuning	2C4528/14
N7				*	DIAL: band change sw; black Bakelite knurled knob w/etched aluminum round disk; knob 1⅝″ diam, disk 2⅛″ diam x 1/16″ thk; shaft ¼″ diam w/2 setscrews; marked scale 300-540 kc, 5-10 mc, 540-1,160 kc, 1,160-2,500 kc, and 2.5-5.0 mc; Hammarlund No. SA-205.	Band change switch.....	2Z3714-66
N8				*	DIAL: main tuning indicator; calibrated dial and masking disk; scales 300-540 kc, 5-10 mc, 540-1,160 kc, 1,160-2,500 kc, and 2.5-5.0 mc; 6″ diam; Hammarlund No. SA-204.	Main tuning	2Z3714-144
J1	*	*	*	*	JACK JK-34: telephone; for 2 cond. 0.250″ diam plug; 1¼″ lg x 1″ wd x ¾″ h; J1 cont arrangement; Sig C dwg No. SC-D-2339.	Reduced a-f output.....	2Z5534
E7, E8, E9, E10, E12, E14, E15, E16, E17	*	*	*	*	KNOB: round; black Bakelite; ¼″ diam shaft hole; No. 8-32 tapped hole and setscrew; 1⅛″ diam w/pointer; 9/16″ diam brass bushing; knurled finger grip; Kurz-Kasch No. S-308-64B; Hammarlund No. SA-86.	Knob	2Z5822-6.1
E11, E13	*	*	*	*	KNOB: round; black Bakelite; ¼″ diam shaft hole; No. 10-32 headless setscrew in tapped hole; 1⅝″ diam x ¾″ thk over-all; brass bushing; knurled finger grip; Hammarlund No. 3856.	Knob	2Z5822-88

* An asterisk in the *Models* column means that the item is part of the model indicated.

ManualsPlus.com

Ref symbol	Models				Name and description of part	Function of part	Signal Corps stock No.
	BC-779-A, -B	BC-794-A, -B	BC-1004-B, -C, -D	R-129/U			
I1, I2	*	*	*	*	LAMP LM-25: incandescent; 6-8 v, 0.15 amp; Mazda No. 40, bulb T-3-¼ clear; C-2 fil; miniature screw base.	Dial lamp	2Z5925
I3	*	*	*	*	LAMP LM-52: incandescent; 6-8 v, 0.15 amp; Mazda No. 47, bulb T-3-¼ clear; 1³⁄₁₆″ lg over-all; miniature bayonet base.	Meter lamp	2Z5952
E28	*	*	*	*	LAMPHOLDER: miniature bayonet; steel shell, phenolic insert, cadmium pl; for 6-8 v, 0.15-amp lamp; 1³⁄₁₆″ lg x ⅞″ diam; spring prongs grip in ⅝″ diam hole; United-Carr No. 99315; Hammarlund No. 4929.	S meter lamp	2Z5883-15
E26, E27	*	*	*	*	LAMPHOLDER: miniature screw base; metal base and bracket; for 6-8 v 0.15-amp lamp; approx 2″ lg over-all w/1¼″ lg adj slot; Drake No. 106CE (for tuning and band spread dial).	Dial light lampholder	2Z5882-10
M1	*	*	*	*	METER, ammeter: DC; 0-200 ua; round, metal flush mtg case; 2″ diam body; black numerals on white background; self-contained; special scale calibrated 1 to 9; Hammarlund No. 4903.	Tuning and S indicator	2C4528.7/15
R31, R32	*	*	*	*	RESISTOR, fixed: wire-wound; 4 ohms ±5%; 7 w; max body dimen 1¹⁄₁₆″ lg x ¹⁹⁄₃₂″ diam; JAN type RW30G4RO.	V9 heater and dial lamp dropping.	3RW9902
R38	*	*	*	*	RESISTOR, fixed: composition; 300 ohms ±5%; ½ w; max body dimen 0.655″ lg x 0.249″ diam; JAN type RC21BF301J.	Bias voltage divider	3RC21BF301J
R36	*	*	*	*	RESISTOR, fixed: wire-wound; 750 ohms ±5%; 10 w; body dimen 1¾″ lg x ⅜″ diam; Utahrad type 10-VWQ; Hammarlund No. 3836.	V15, V16 cathode biasing	3Z6075-1
R39	*	*	*	*	RESISTOR, fixed: composition; 1,800 ohms ±5%; ½ w; max body dimen 0.655″ lg x 0.249″ diam; JAN type RC21BF182J.	Bias voltage divider	3RC21BF182J
R3, R7, R15, R16, R17, R20, R21	*	*	*	*	RESISTOR, fixed: composition; 2,000 ohms ±5%; ½ w; max body dimen 0.655″ lg x 0.249″ diam; JAN type RC21BF202J.	Plate and screen filter	3RC21BF202J
R40	*	*	*	*	RESISTOR, fixed: composition; 3,000 ohms ±5%; 1 w; max body dimen 1.28″ lg x 0.310″ diam; JAN type RC31BF302J.	Bias voltage divider	3RC31BF302J
R35, R54, R55	*	*	*	*	RESISTOR, fixed: composition; 5,100 ohms ±5%; ½ w; max body dimen 0.655″ lg x 0.249″ diam; JAN type RC21BF512J.	Filter and load	3RC21BF512J

* An asterisk in the *Models* column means that the item is part of the model indicated.

ManualsPlus.com

Ref symbol	Models: BC-779-A, -B	BC-794-A, -B	BC-1004-B, -C, -D	R-129/U	Name and description of part	Function of part	Signal Corps stock No.
R2, R6, R10, R18, R22	*	*	*	*	RESISTOR, fixed: composition; 10,000 ohms ±10%; ½ w; max body dimen 0.655″ lg x 0.249″ diam; JAN type RC21BF103K.	Grid filters	3RC21BF103K
R14	*	*	*	*	RESISTOR, fixed: composition; 12,000 ohms ±10%; 2 w; max body dimen 1.78″ lg x 0.405″ diam; JAN type RC41BF123K.	V4 plate filter	3RC41BF123K
R4, R8	*		*	*	RESISTOR, fixed: composition; 2,000 ohms ±5%; ½ w; max body dimen 0.655″ lg x 0.249″ diam; JAN type RC21BF202J.	V1, V2 plate filter	3RC21BF202J
R53	*	*	*	*	RESISTOR, fixed: composition; 24,000 ohms ±5%; ½ w; max body dimen 0.655″ lg x 0.249″ diam; JAN type RC21BF243J.	V12 load	3RC21BF243J
R12	*	*	*	*	RESISTOR, fixed: composition; 24,000 ohms ±5%; 2 w; max body dimen 1.78″ lg x 0.405″ diam; JAN type RC41BF243J.	V3 screen filter	3RC41BF243J
R11, R13	*	*	*	*	RESISTOR, fixed: composition; 50,000 ohms ±10%; ⅓ w; body diam 47/64″ lg x 15/64″ diam; ceramic insulation; IRC type F-⅓; Hammarlund No. 4960.	Grid coupling	3Z6650-77
R25, R34	*	*	*	*	RESISTOR, fixed: composition; 51,000 ohms ±5%; ½ w; max body dimen 0.655″ lg x 0.249″ diam; JAN type RC21BF513J.	V3, V4 grid coupling	3RC21BF513J
R23, R28, R37	*	*	*	*	RESISTOR, fixed: composition; 51,000 ohms ±5%; 1 w; max body dimen 1.28″ lg x 0.310″ diam; JAN type RC31BF513J.	Filter and load	3RC31BF513J
R24	*	*	*	*	RESISTOR, fixed: composition; 75,000 ohms ±5%; ½ w; max body dimen 0.655″ lg x 0.249″ diam; JAN type RC21BF753J.	V8 load	3RC21BF753J
R30	*	*	*	*	RESISTOR, fixed: composition; 240,000 ohms ±5%; ½ w; max body dimen 0.655″ lg x 0.249″ diam; JAN type RC21BF244J.	V8 cathode biasing	3RC21BF244J
R1, R5, R9	*	*	*	*	RESISTOR, fixed: composition; 500,000 ohms ±10%; ⅓ w; body dimen 47/64″ lg x 15/64″ diam; ceramic insulation; IRC type F-⅓; Hammarlund No. 4959.	Grid coupling	3Z6750-17
R57, R58,			*	*	RESISTOR, fixed: wire-wound; 20 ohms ±5%; ½ w; max body dimen 21/32″ lg x 15/64″ diam; JAN type RU3C200J.	L42, L44 selectivity controlling.	3RU18802
R27, R29, R33	*	*	*	*	RESISTOR, fixed: composition; 510,000 ohms ±5%; ½ w; max body dimen 0.655″ lg x 0.249″ diam; JAN type RC21BF514J.	Grid coupling and screen dropping.	3RC21BF514J

* An asterisk in the *Models* column means that the item is part of the model indicated.

ManualsPlus.com

Ref symbol	Models				Name and description of part	Function of part	Signal Corps stock No.
	BC-779-A, -B	BC-794-A, -B	BC-1004-B, -C, -D	R-129/U			
R52	*	*	*	*	RESISTOR, fixed: composition; 1 meg ±5%; ½ w; max body dimen 0.655″ lg x 0.249″ diam; JAN type RC21BF105J.	A-v-c timing	3RC21BF105J
R19	*	*	*	*	RESISTOR, fixed: composition; 2 meg ±5%; ½ w; max body dimen 0.655″ lg x 0.249″ diam; JAN type RC21BF205J.	AVC–MANUAL shunt	3RC21BF205J
R41	*	*	*	*	RESISTOR, variable (potentiometer): composition; 1,000 ohms ±20%; ½ w; 3 solder lug term.; body dimen 1⅛″ diam x 1 1/32″; bushing ⅜″-32 x ⅜″; shaft ¼″ diam x 1½″ lg; Clarostat No. 37; Hammarlund No. 5080.	S meter shunt	2Z7268.13
R56	*	*	*	*	RESISTOR, variable (potentiometer): composition; 50,000 ohms ±20%; ½ w; 5 solder lug term.; body dimen 1¼″ diam x 9/16″ behind panel; shaft ¼″ diam x 25/32″ lg; bushing ⅜″-32 x ⅜″; taper "A"; SPST sw; IRC type C; Hammarlund No. 5023 (RF and IF sensitivity control).	Sensitivity control	2Z7270.16
R26	*	*	*	*	RESISTOR, variable (potentiometer): composition; 250,000 ohms ±20%; ½ w; 3 solder lug term.; body dimen 1¼″ diam; taper "B"; IRC type C; Hammarlund No. 4919.	A–f gain control	2C4528.6/16
X1 to X16	*	*	*	*	SOCKET, tube: octal; mica-filled Bakelite; 1¾″ lg x 1 9/32″ x ⅞″ d over-all; Amphenol No. MIP8TM.	Tube sockets	2Z8795.12
SW5	*	*	*	*	SWITCH, rotary: SPST; 1⅛″ diam; shaft ¼″ diam x 10¾″ lg; Hammarlund No. 4916.	Noise limiter	3Z9900–3
SW2	*	*	*	*	SWITCH, rotary: SPST; 1⅛″ diam; x ⅜″ lg; ¼″ diam shaft; Hammarlund No. 4917.	Send-receive	3Z9900–2
SW7	*	*	*	*	SWITCH, rotary: 8 pole, 6 position; fiber insulation; 2 cont inside, 1 position; single hole, ¼″ diam shaft, ⅜″ x ⅜″-32 bushing; Hammarlund No. 4911.	Crystal filter selectivity	3Z9903–5
SW6	*	*	*	*	SWITCH, toggle: DPST; 30 v, 15 amp; 125 v, 3 amp; 250 v, 1 amp; molded or laminated plastic; 1 13/32″ lg x 17/32″ wd x 2″ d over-all; locking, normally open; solder lug term.; JAN type ST28K.	Power off-on	3Z9859–52
SW4	*	*	*	*	SWITCH, toggle: DPDT; 250 v, 15 amp; molded or laminated plastic; 1 13/32″ lg x 17/32″ wd x 9/16″ d w/15/32″ sleeve; locking action, normally open; solder lug term.; JAN type ST28N.	AVC–MANUAL	3Z9863–28N

* An asterisk in the *Models* column means that the item is part of the model indicated.

ManualsPlus.com

Ref symbol	Models				Name and description of part	Function of part	Signal Corps stock No.
	BC-779-A, -B	BC-794-A, -B	BC-1004-B, -C, -D	R-129/U			
T7	*	*	*	*	TRANSFORMER, AF: plate coupling type; pri 3,000 ohms impedance, secd CT, 34 ma DC; 2¾″ x 2¹³⁄₁₆″ x 3½″ h; ratio 1.14 to 1; Chi Trans No. 4212-C; Hammarlund No. 5081.	V15, V16 push-pull input...	2Z9635.7
SW3	*	*	*	*	SWITCH, rotary: DPST; ⅓ amp, 250 v; 1⁹⁄₁₆″ wd x ¾″ h over-all; locking action type, normally open; solder lug term.; mts w/ ⅜″ x 11⁄32″-32 thd bushing; ¼″ diam x ⅜″ lg shaft; AH and H No. 1572.	Signal mod-cw	3Z9826-5.1
T8	*	*	*	*	TRANSFORMER, AF: plate coupling type; pri 10,000 ohms impedance, CT; secd 600 ohms; 8,000 ohms impedance; fully inclosed metal case; 2¾″ x 2³⁄₁₆″ x 3½″ h; Hammarlund No. 5082.	V15, V16 push-pull output.	2Z9632.66
T6	*	*	*	*	TRANSFORMER, IF: 465 kc, AVC diode input; shielded; 2″ x 2″ x 5″; fixed selectivity; includes C51, C52, C53, C54, C55, C56, L34, R51, R52, R53, R54, and R55; Hammarlund No. SA-168A.	V12 input	2C4528.7/61
T1	*	*	*	*	TRANSFORMER, IF: 465 kc; crystal filter, variable selectivity; shielded; 2³⁄₃₂″ x 3″ x 5″ h; powdered iron core; adj iron core tuning w/variable air capacitor; includes crystal and 6 position sw w/crystal selectivity and phasing adj from front panel; Hammarlund No. SA-178-A.	Selectivity varying	2C4528.7/63
T2, T3	*	*	*	*	TRANSFORMER, IF: 465 kc; 1st IF, 2d IF; shielded; 5″ x 2″ x 2″; double tuned; variable air trimmers; Hammarlund No. SA-166A.	Bandwidth varying	2C4528.7/5.1
T4	*	*	*	*	TRANSFORMER, IF: 465 kc; 2d detector input; shielded; 5″ h x 2″ wd x 2″ d; double tuned; variable air trimmers; Hammarlund No. SA-167A.	V8 input	2C4528.6/7
V13	*	*	*	*	TUBE, electron: JAN-6C5.....	1st AF	2J6C5
V14, V15, V16	*	*	*	*	TUBE, electron: JAN-6F6.....	A-F DRIVER and OUTPUT.	2J6F6
V8, V12	*	*	*	*	TUBE, electron: JAN-6H6.....	DETECTOR and A-V-C RECTIFIER.	2J6H6
V4	*	*	*	*	TUBE, electron: JAN-6J7.....	H-F OSC	2J6J7
V1, V5, V2	*	*	*	*	TUBE, electron: JAN-6K7.....	1st RF, 1st IF, 2d RF.....	2J6K7

* An asterisk in the *Models* column means that the item is part of the model indicated.

ManualsPlus.com

Ref symbol	Models				Name and description of part	Function of part	Signal Corps stock No.
	BC-779-A, -B	BC-794-A, -B	BC-1004-B, -C, -D	R-129/U			
V3	*	*	*	*	TUBE, electron: JAN-6L7	Mixer	2J6L7
V9	*	*	*	*	TUBE, electron: JAN-6N7	Limiter	2J6N7
V10	*	*	*	*	TUBE, electron: JAN-6SJ7	B-F OSC	2J6SJ7
V6, V11, V7	*	*	*	*	TUBE, electron: JAN-6SK7Y	2d IF, AVC AMPLR, 3d IF.	2J6SK7Y

* An asterisk in the *Models* column means that the item is part of the model indicated.

5. Identification Table of Replaceable Parts for Power Supply Units RA-74-B and -C, RA-84-A and -B, and RA-94-A

Note. The following list covers organizational and field maintenance parts. Refer to paragraph 1 of this appendix for appropriate supply catalog pamphlets.

Ref symbol	Models			Name and description of part	Function of part	Signal Corps stock No.
	RA-74-B, -C	RA-84-A, -B	RA-94-A			
E1	*	*	*	BOARD, terminal: connecting power to receiver; 10 screw term.; arranged in groups of 5 term. ea; phenolic; term. numbered 1 to 10; HB Jones Co. per Hammarlund No. 3838.	Receiver connections	2C4528/35
W1	*	*	*	CABLE ASSEMBLY, power: uses type SJ cable; 2 #18 AWG stranded cond; RC; 600 v insulation; 7 ft lg; w/Belden No. 1047, 2 cont male connector one end; other end stripped and tinned; Belden type SJ cable, Corwire cable type POSJ-664-53; Hammarlund No. 6143.	A-c line cord	3E4060
C2	*	*	*	CAPACITOR, fixed: paper; 4 sect; 3-3-3-3 mf +20%; 600 vdcw; HS metal can; 4½" lg x 3¾" wd x 1¾" thk; Dykanol oil filled; requires TJL type footed clamp brackets for mtg; Dubilier No. PC-1937; Hammarlund No. 4883.	Bias supply filter	3DB3.12
C1	*	*	*	CAPACITOR, fixed: paper; 4 sects; 8-8-8-8 mf +20% −10%; 600 vdcw; HS metal can; 3¾" lg x 3 3/16" x 4 3/16" h; Dykanol G impregnated; requires TJL type footed clamp brackets for mtg; Dubilier No. PC-1936; Hammarlund No. 4884.	Plate supply filter	3DB8-44

* An asterisk in the *Models* column means that the item is part of the model indicated.

ManualsPlus.com

Ref symbol	Models RA-74-B, -C	Models RA-84-A, -B	Models RA-94-A	Name and description of part	Function of part	Signal Corps stock No.
	*	*	*	CONNECTOR, plug: 2 flat parallel male blade cont; straight; 1 9/16" OD x 1 1/4" lg less cont; 15 amp, 125 v, 10 amp, 250 v; cylindrical steel body, cad pl; Bakelite insert; cable opening 9/32" diam w/cable clamp; Hubbell No. 7057.	A-c line cord.....	6Z1727
F1	*	*	*	FUSE FU-27: cartridge; 2 amp, 250 v; glass body; ferrule term.; 1 1/4" lg x 1/4" diam over-all.	Power line fuse.....	3Z1927
E3	*	*	*	HOLDER, fuse: extractor post; for No. 3AG cartridge fuse; molded black Bakelite body; 125 v AC or DC, 10 amp max; 2 1/8" lg over-all, 2 solder lug term.; red extractor knob; Littelfuse No. 341001.	Power line fuse holder..	3Z3275
L1	*			REACTOR: filter choke; 25 hy at 0.160 amp; 350 ohms DC resistance; 1,000 v DC insulation test; inclosed metal case; 3 5/8" x 4 7/16" x 4 11/32" over-all; 6 mtg holes, 3 7/8" c; Chi Trans No. 7410-A; Hammarlund No. 5084.	First filter choke.....	3C317-12
L2	*			REACTOR: filter choke; 50 hy, at 0.110 amp; 1,150 ohms DC resistance; inclosed metal case 3 5/8" x 4 7/16" x 4 11/32" over-all; 6 mtg holes, 3 5/8" c; Chi Trans No. 7393-A; Hammarlund No. 5085.	Second filter choke.....	3C317-13
L1		*		REACTOR: filter choke; 25 hy at 0.160 amp; 350 ohms DC resistance; 1,000 v DC insulation test; inclosed metal case; impregnated and potted; 3 5/8" x 3 1/4" x 4 5/16" h; 4 mtg holes, 3 7/8" c; Chi Trans No. 7410-B; Hammarlund No. 5084.	First filter choke.....	3C317-38
L1			*	REACTOR: filter choke; 20 hy at 0.16 amp; 350 ohms DC resistance; 2,400 v AC insulation; potted metal case; 1 3/8" x 2 3/4"; 6 mtg holes, 3.87" c; fungicide treated; Chi Trans No. 7410D; Hammarlund No. 5084.	First filter choke.....	3C308-9
L2		*	*	REACTOR: filter choke; 50 hy at 0.10 amp; 1,100 ohms DC resistance; potted metal case; 4 1/4" h x 3 1/8" wd x 3 1/8" lg; 6 mtg holes; Chi Trans No. 7393; Hammarlund No. 4999.	Second filter choke.....	3C308-10
R1	*	*	*	RESISTOR, fixed: wire-wound; 18,000 ohms ±5%; 10 w; tapped at 9,500 ohms; 6 1/2" lg x 13/16" wd x 3/16" thk; 3 solder lug term. on top; Wirt Co. "Steelbak"; Hammarlund No. 4946.	Plate supply voltage divider.	2C4528.6/18

* An asterisk in the *Models* column means that the item is part of the model indicated.

ManualsPlus.com

Ref symbol	Models			Name and description of part	Function of part	Signal Corps stock No.
	RA-74-B, -C	RA-84-A, -B	RA-94-A			
R2	*	*	*	RESISTOR, fixed: wire-wound; 24,000 ohms ±10%; 10 w; tapped at 8,000 and 16,000 ohms; 6½" lg x 13/16" wd x 3/16" thk; 4 solder lug term. on top; Wirt Co. "Steel-bak"; Hammarlund No. 4882.	Bias supply filter.....	3Z6624-1
X1, X2	*	*	*	SOCKET, tube: medium 4 cont; round black plastic w/metal saddle; 1¾" lg x 1 9/32" x ⅞" d over-all; Amphenol No. MIP-4.	Tube sockets.....	2Z8654.1
T1, T2, T3	*	*	*	TRANSFORMER, power: fil and plate; input 95/105/117/130, 190/210/230/260 v AC, 25-60 cyc; 5 output windings; secd No. 1, 435 v, 160 ma, DC; secd No. 2, 315 v, 11 ma, DC; secd No. 3, 6.3 v, 7 amp; secd No. 4, 5.0 v, 2 amp; secd No. 5, 5.0 v, 3 amp; inclosed metal case; 6½" x 7⅛" x 6 1/16" over-all; Chi Trans No. 8050-A; Hammarlund No. 5086.	Power transformers.....	2Z9608-6
V1	*	*	*	TUBE, electron: JAN-5Z3.....	Plate supply rectifier.....	2J5Z3
V2	*	*	*	TUBE, electron: JAN-80.....	Bias supply rectifier.....	2J80

* An asterisk in the *Models* column means that the item is part of the model indicated.

ManualsPlus.com

APPENDIX III

IMPROVEMENT KIT MC–531

1. Purpose

Improvement Kit MC–531 is designed to stabilize the operation of the radio receiver under conditions of varying line voltage and ambient temperature changes by means of a crystal oscillator which provides for crystal-controlled reception at any one of three signal frequencies, in the frequency range of 1.5 to 20 mc.

2. Circuit Theory

a. The circuit of Improvement Kit MC–531 (fig. 53) is an electron-coupled Pierce oscillator utilizing a Tube JAN–6AC7. The crystal oscillatory circuit consists of the cathode, control grid, screen, capacitors C3 and C5, and the crystal unit selected. Capacitor C4 prevents d-c voltage from appearing across the crystal units. The crystal oscillatory circuit is electron-coupled to the plate of tube JAN–6AC7. The h-f oscillator tank circuit in the radio receiver is used as the tuned plate circuit. This tuned circuit may be tuned by the MAIN TUNING control to the fundamental, second, or third harmonic of the crystal frequency. Note that the tuned plate circuit, which is actually the receiver h-f oscillator tank, is different for every band. Plate voltage is supplied through r-f coil L1. Coupling capacitor C1 also prevents d-c voltage from appearing across the receiver h-f oscillator tank circuit. The suppressor grid and cathode are connected to ground directly, while the screen grid is held above r-f ground by r-f coil L2. The suppressor grid serves to prevent the plate load from affecting the Pierce crystal oscillator circuit.

b. Change of crystal oscillator frequency over a minimum range of ±0.005 percent is obtained when △ FREQ HIGH-LOW capacitor C5 is rotated toward maximum (LOW) or minimum (HIGH) capacitance from its midpoint setting. The crystals operate at nominal frequency with capacitor C5 in the half-open (midpoint) position. In the OFF (normal) position, rotary XTALS switch S1, section 1 rear, applies plate voltage to the receiver h-f oscillator tube, while removing plate voltage from the crystal oscillator tube. For crystal operation, plate voltage is removed from the h-f oscillator tube and applied to the crystal oscillator tube. Switch S1, section 2, front, selects the desired crystal. The receiver h-f oscillator tank circuit, which is connected to the output of the crystal oscillator, is tuned to the signal frequency by the MAIN TUNING dial. The signal frequency to be crystal-controlled is then the fundamental, second, or third harmonic of the crystal unit, less the i.f. of the receiver. Capacitor C2 places one side of L2 at r-f ground and also decouples the screen circuit. Rectified grid current causes a bias voltage to appear across R1. Screen voltage is supplied through R2 and L2. Interaction between harmonically related crystals is prevented by switch S1, section 2, rear, which short circuits unused crystals.

ManualsPlus.com

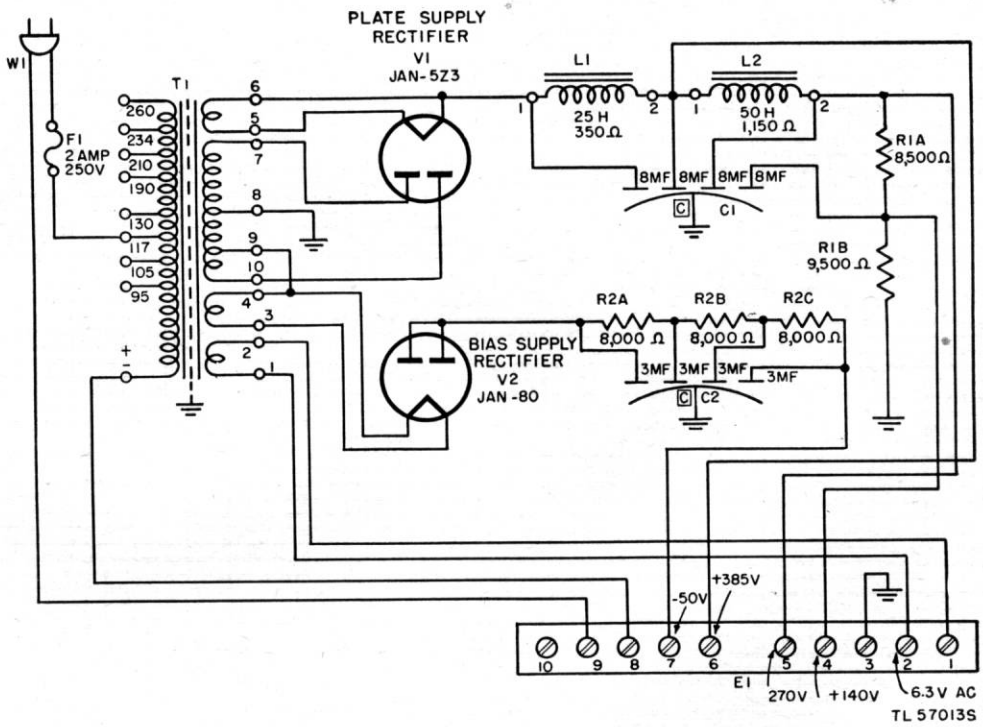

Figure 50. Power Supply Unit RA-74-B, -C, schematic diagram.

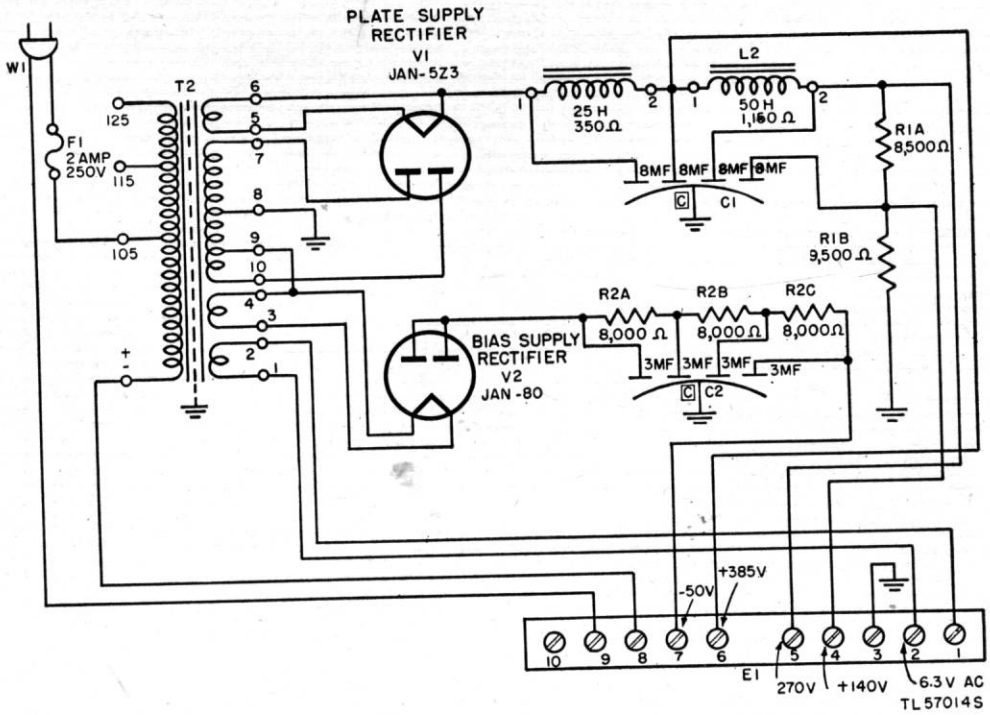

Figure 51. Power Supply Unit RA-84-A, -B, schematic diagram.

ManualsPlus.com

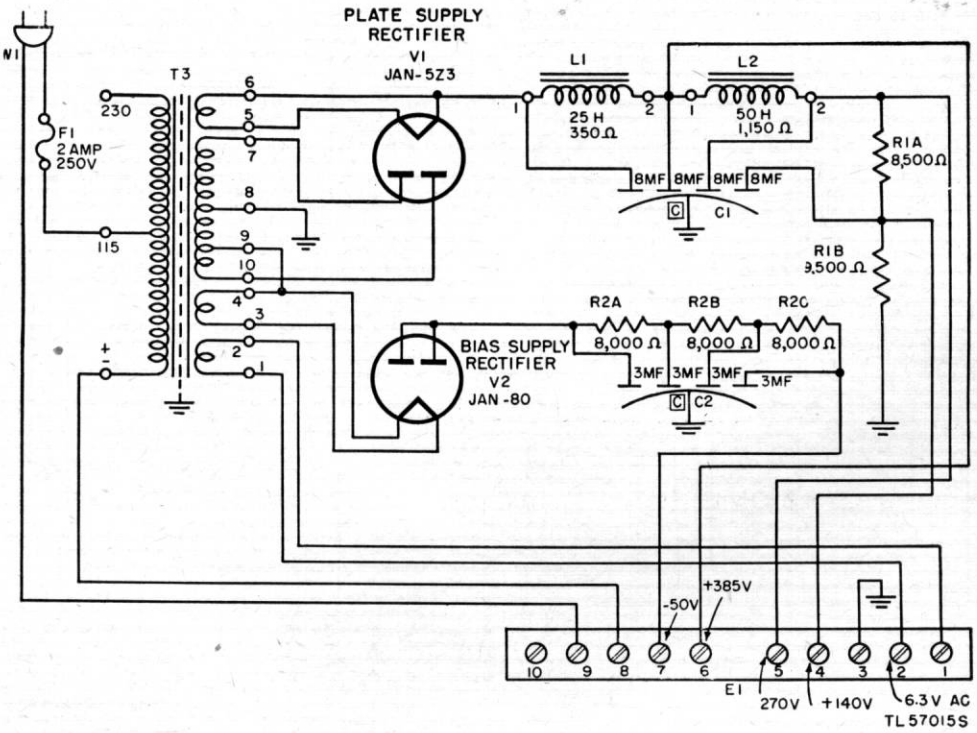

Figure 52. Power Supply Unit RA-94-A, schematic diagram.

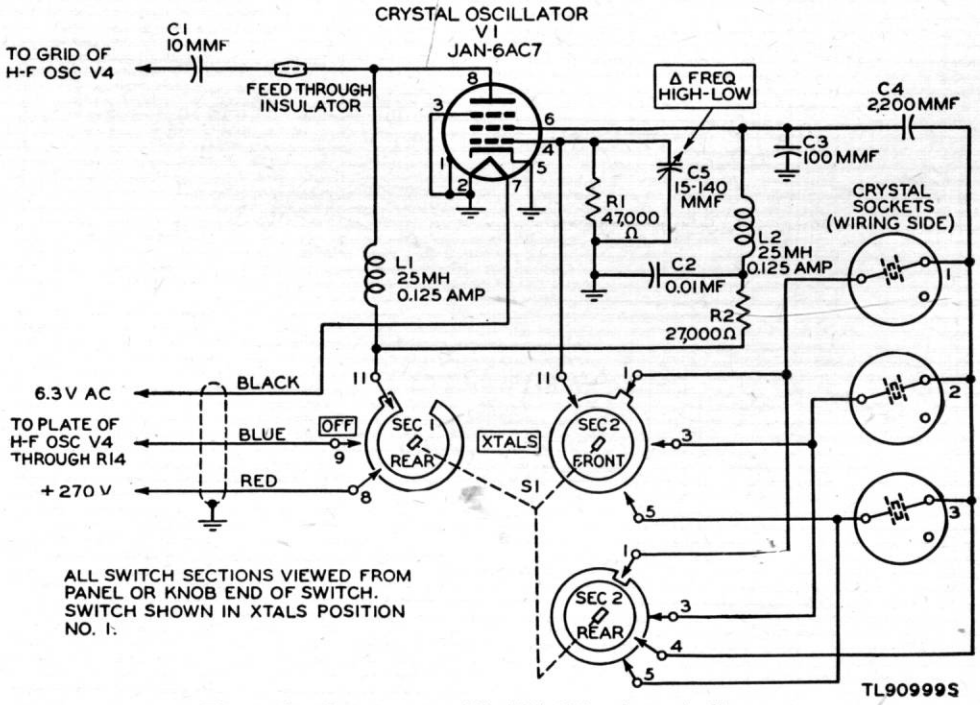

Figure 53. Improvement Kit MC-531, schematic diagram.

ManualsPlus.com

CAPACITOR COLOR CODES

RMA 3-DOT COLOR CODE FOR MICA-DIELECTRIC CAPACITORS

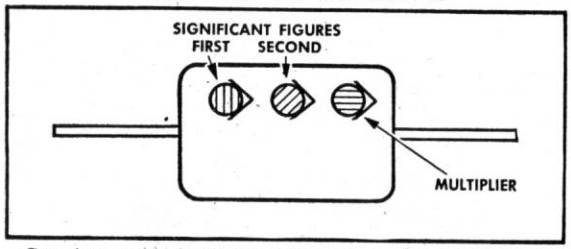

Capacitors marked with this code have a voltage rating of 500 volts.

RMA 6-DOT COLOR CODE FOR MICA-DIELECTRIC CAPACITORS

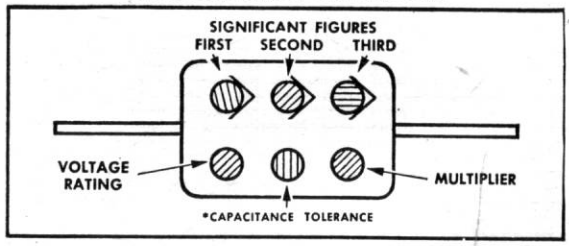

RMA COLOR CODE FOR TUBULAR CERAMIC-DIELECTRIC CAPACITORS

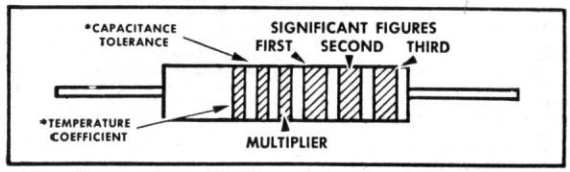

Capacitors marked with this code have a voltage rating of 500 volts.

RMA Radio Manufacturers Association JAN Joint Army-Navy

Note These color codes give all capacitances in micromicrofarads.

*Items marked with an asterisk are of interest primarily to depot and higher echelon repair personnel

JAN 6-DOT COLOR CODE FOR PAPER-DIELECTRIC CAPACITORS

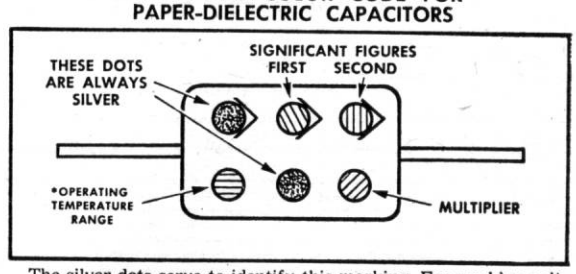

The silver dots serve to identify this marking. For working voltages see JAN type designation code.

JAN 6-DOT COLOR CODE FOR MICA-DIELECTRIC CAPACITORS

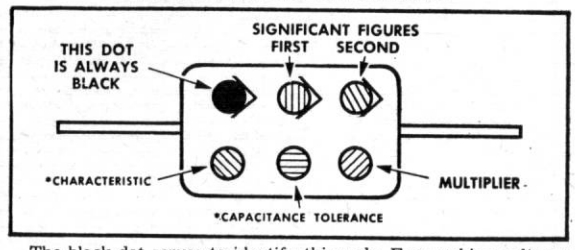

The black dot serves to identify this code. For working voltages see JAN type designation code.

JAN COLOR CODE FOR FIXED CERAMIC-DIELECTRIC CAPACITORS

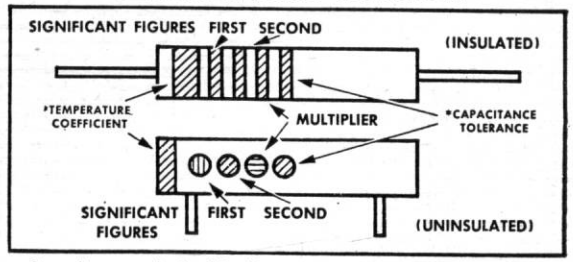

Capacitors marked with this code have a voltage rating of 500 volts. Either the band or dot code may be used.

COLOR	SIGNIFICANT FIGURE	MULTIPLIER			RMA VOLTAGE RATING
		RMA MICA-AND CERAMIC-DIELECTRIC	JAN MICA-AND PAPER-DIELECTRIC	JAN CERAMIC-DIELECTRIC	
BLACK	0	1	1	1	
BROWN	1	10	10	10	100
RED	2	100	100	100	200
ORANGE	3	1,000	1,000	1,000	300
YELLOW	4	10,000			400
GREEN	5	100,000			500
BLUE	6	1,000,000			600
VIOLET	7	10,000,000			700
GRAY	8	100,000,000		0.01	800
WHITE	9	1,000,000,000		0.1	900
GOLD		0.1	0.1		1,000
SILVER		0.01	0.01		2,000
NO COLOR					500

TL 13417 A

858–Ft. Mon.–6-6-45–500

Figure 54. Capacitor color codes.

ManualsPlus.com

RESISTOR COLOR CODES

RMA COLOR CODE FOR FIXED COMPOSITION RESISTORS

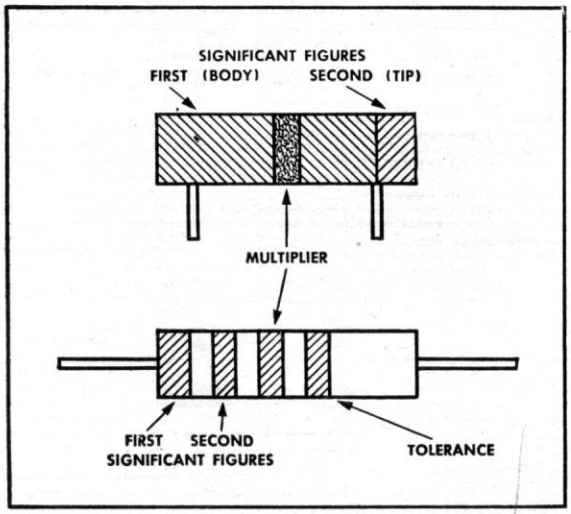

Insulated fixed composition resistors with axial leads are designated by a natural tan background color. Non-insulated fixed composition resistors with axial leads are designated by a black background color.

JAN COLOR CODE FOR FIXED COMPOSITION RESISTORS

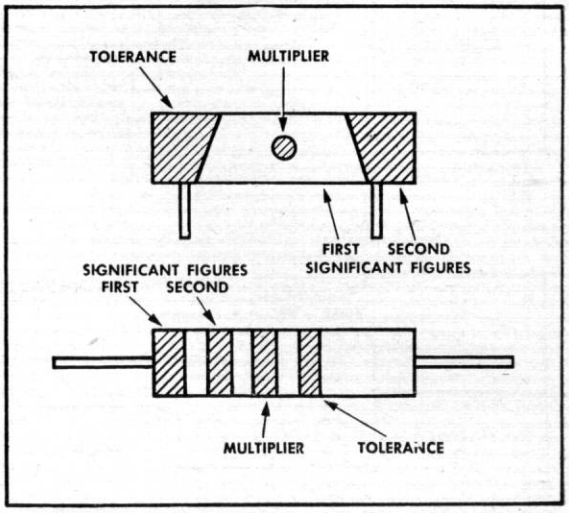

Resistors with axial leads are insulated. Resistors with radial leads are uninsulated.

COLOR	SIGNIFICANT FIGURE	MULTIPLIER	TOLERANCE (PERCENT)
BLACK	0	1	
BROWN	1	10	
RED	2	100	
ORANGE	3	1,000	
YELLOW	4	10,000	
GREEN	5	100,000	
BLUE	6	1,000,000	
VIOLET	7	10,000,000*	
GRAY	8	100,000,000*	
WHITE	9	1,000,000,000*	
GOLD		0.1*	5
SILVER		0.01*	10
NO COLOR			20

*JAN ONLY

Example: A 50,000-ohm resistor with a standard tolerance of 20 percent (no color) would be indicated by a green ring (5), a black ring (0), and an orange ring (000)

RMA: Radio Manufacturers Association
JAN: Joint Army-Navy

TL 13418 A

Figure 55. Resistor color codes.

ManualsPlus.com

INDEX

	Paragraph	Page
Adjustment of dial gearing and friction drive	89	62
Alinement and adjustment	93–100	62
A-v-c circuit	96	64
B-f-o circuit	97	64
Calibration of signal generator	94	63
High-frequency oscillator calibration	98	64
I-f alinement	95	63
L27 alinement	100	68
R-f and mixer alinement	99	67
Test instruments	93	62
Audio-frequency amplifier	67	43
A-v-c alinement	96	64
A-v-c circuit	65	41
Band spread	69	45
Band switching	68	45
Battery operation	72	47
Beat-frequency oscillator	66, 97	43, 64
Block diagram of receiver	58	33
Calibration of signal generator	94	63
Capacitor tests	79	49
Code reception	18	15
Commercial nomenclature	10	8
Components, table of	4	4
Connections and interconnections	13	9
Crystal filter	61	36
Description of power supply unit	8	7
Description of radio receiver	7	7
Detector	63	39
Dial gearing and friction drive, adjustment	89	62
Differences in models	10, 57, 70	8, 33, 46
Equipment performance checklist:		
List	21	16
Purpose and use	20	15
Forms	App. I	69
High-frequency oscillator calibration	98	64
Identification table of replaceable parts	App. II	72
I-f alinement	95	63
I-f amplifier	62	38
Improvement kit MC–531	App. III	88
Installation	12, 13	9
L27 alinement	100	68
Lubrication	50, 51	27
Mixer and h-f oscillator	60	35
Mountings FT–509 and FT–510	9	8
Noise limiter	64	39
Operation of receiver	16–19	15
Packaging data	5, 6	4
Power supply units:		
Circuits	71	46
Connections	13	9
Description	8	7
Differences in models	70	46
Installation	12, 13	9
Packaging data	5, 6	4
Preparation for use	14	12
Technical characteristics	2	2
Test	82	50
Types	1	1
Preventive maintenance	22–49	19
Cabinets, chassis, and mountings	37	23
Capacitors	25	20
Checklist	49	27
Coils	30	22
Cords and cables	33	22
Coupling shafts and control knobs	39	23
Fuses	27	21
Gears	40	24
Headset and loudspeaker	38	23
Insulators	28	21
Items	44–48	24
Jacks and plugs	36	23
Meaning	22	19
Meter	34	22
Pilot lamps	35	23
Power transformers, filter chokes, and audio transformers	41	24
Resistors	26	21
Rheostats and potentiometers	31	22
Switches	29	21
Techniques	23	19
Terminal blocks	32	22
Tools and materials	43	24
Vacuum tubes	24	20
Radiophone reception	17	15
Radio receiver:		
Adjustment of dial gearing and friction drive	89	62
A-f amplifier	67	43
Alinement and adjustment	93–100	62
A-v-c circuit	65	41
Band spread	69	45
Band switching	68	45
Bands	68	45

ManualsPlus.com

	Paragraph	Page
Battery operation	72	47
B-f oscillator	66	43
Block diagram	58	33
Commercial nomenclature	10	8
Connections	13	9
Controls	15	13
Crystal filter	61	36
Description	7	7
Detector	63	39
Differences in models	10	8
Equipment performance checklist	20, 21	15, 16
I-f amplifier	62	38
Installation	12, 13	9
Lubrication	50, 51	27
Mixer and h-f oscillator	60	35
Noise limiter	64	39
Operation	16–19	15
Packaging data	5, 6	4
Preparation for use	14	12
Replacement of tuning dial setscrews	90	62
R-f amplifier	59	33
Siting	11	9
Technical characteristics	2	2
Trouble shooting	74–88	48
Types	1	1
Radio sets:		
Battery operation	72	47
Commercial nomenclature	10	8
Components	4	4
Installation	12–13	9
Lubrication	50–51	27
Operation	16–19	15
Packaging data	5, 6	4
Preparation for use	14	12
Siting	11	9
Types	1	1
Replacement of tuning dial setscrews	90	62
R-f amplifier	59	33
R-f and mixer alinement	99	67
Rustproofing and repainting	91	62
Signal substitution	85–88	53
A-f tests	86	53
I-f tests	87	56
R-f tests	88	59
Siting	11	9
Supply publications	App. I	69
Technical characteristics	2	2
Technical manuals on auxiliary and test equipment	App. I	69
Tropicalization	53–56	28
Moistureproofing and fungiproofing after repairs	56	31
Power supply units	55	30
Receivers	54	28
Trouble shooting	74–88	48
A-f tests	86	53
Capacitor tests	79	49
Chart	84	51
Data	74	48
Equipment performance test	83	51
I-f tests	87	56
Power supply unit test	82	50
Precautions	77	49
Replacing parts	80	50
R-f tests	88	59
Signal substitution notes	85	53
Steps	75	48
Visual inspection	81	50
Voltage measurements	76	48
Voltmeter loading	78	49
Unsatisfactory equipment report	92	62
Voltmeter loading	78	49
Weatherproofing	52	28

☆U. S. GOVERNMENT PRINTING OFFICE: 1948—751744-143

ManualsPlus.com

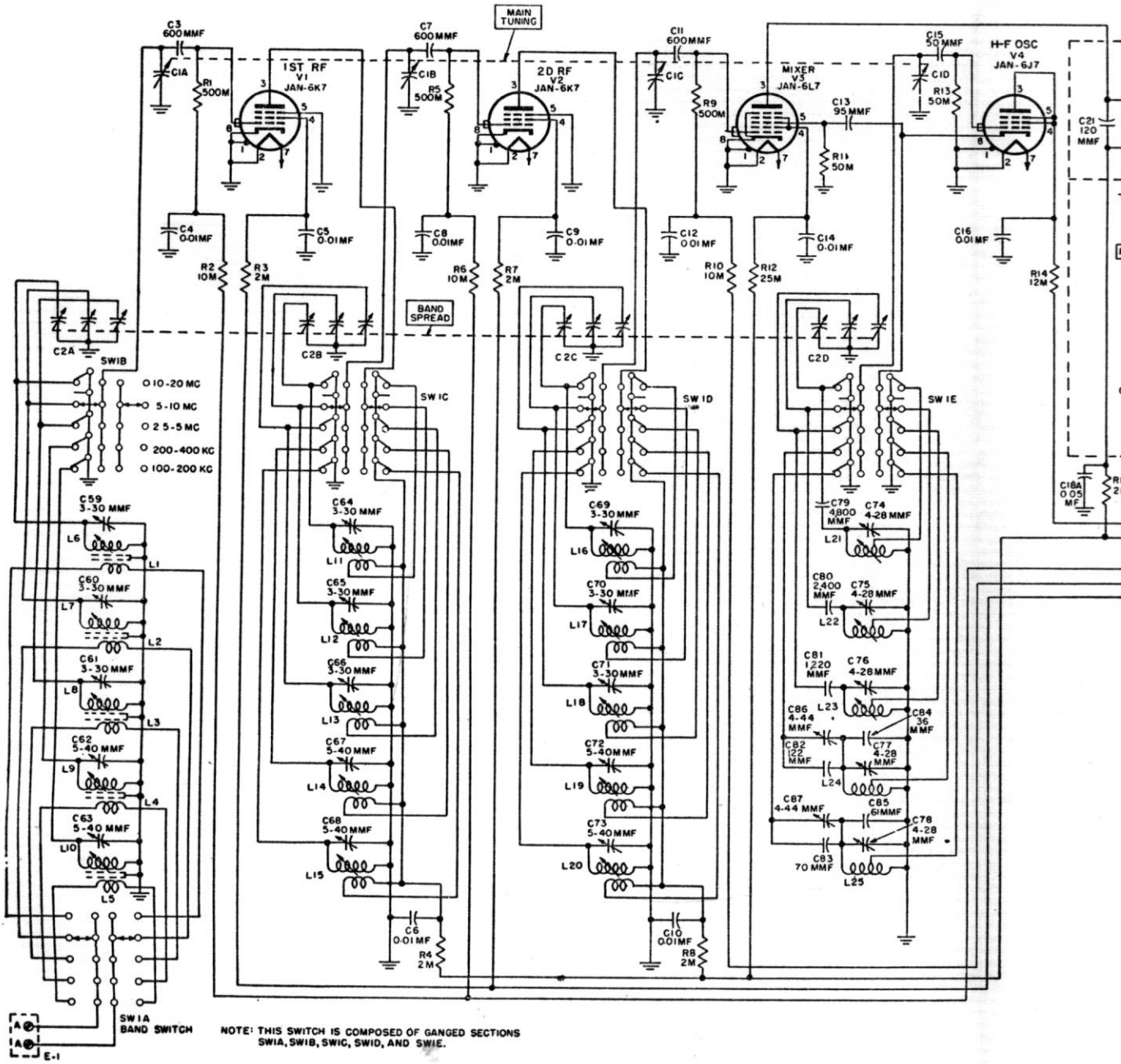

ManualsPlus.com

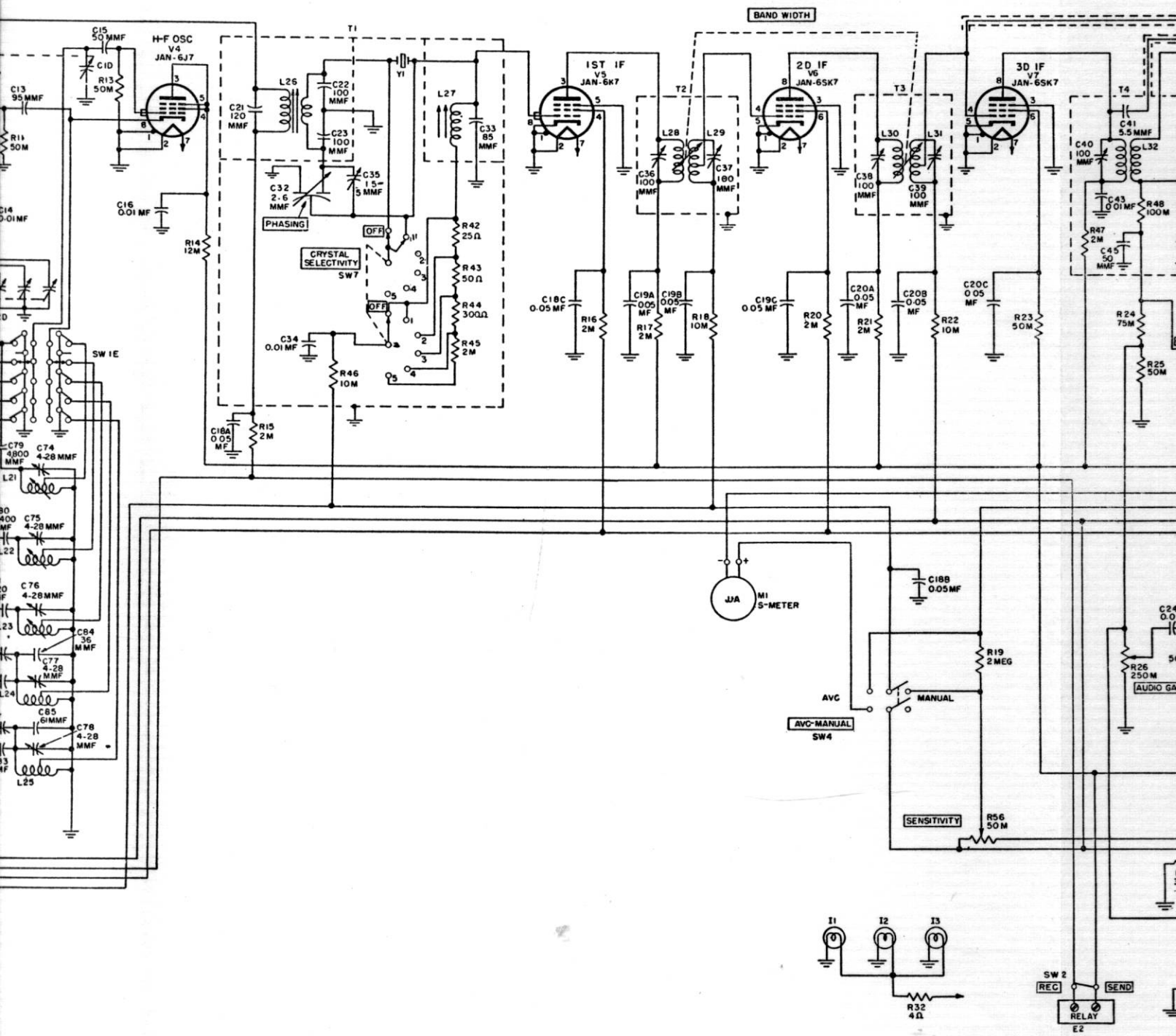

Figure 56. Radio Receiver, BC-779-A, -B, schematic diagram.

ManualsPlus.com

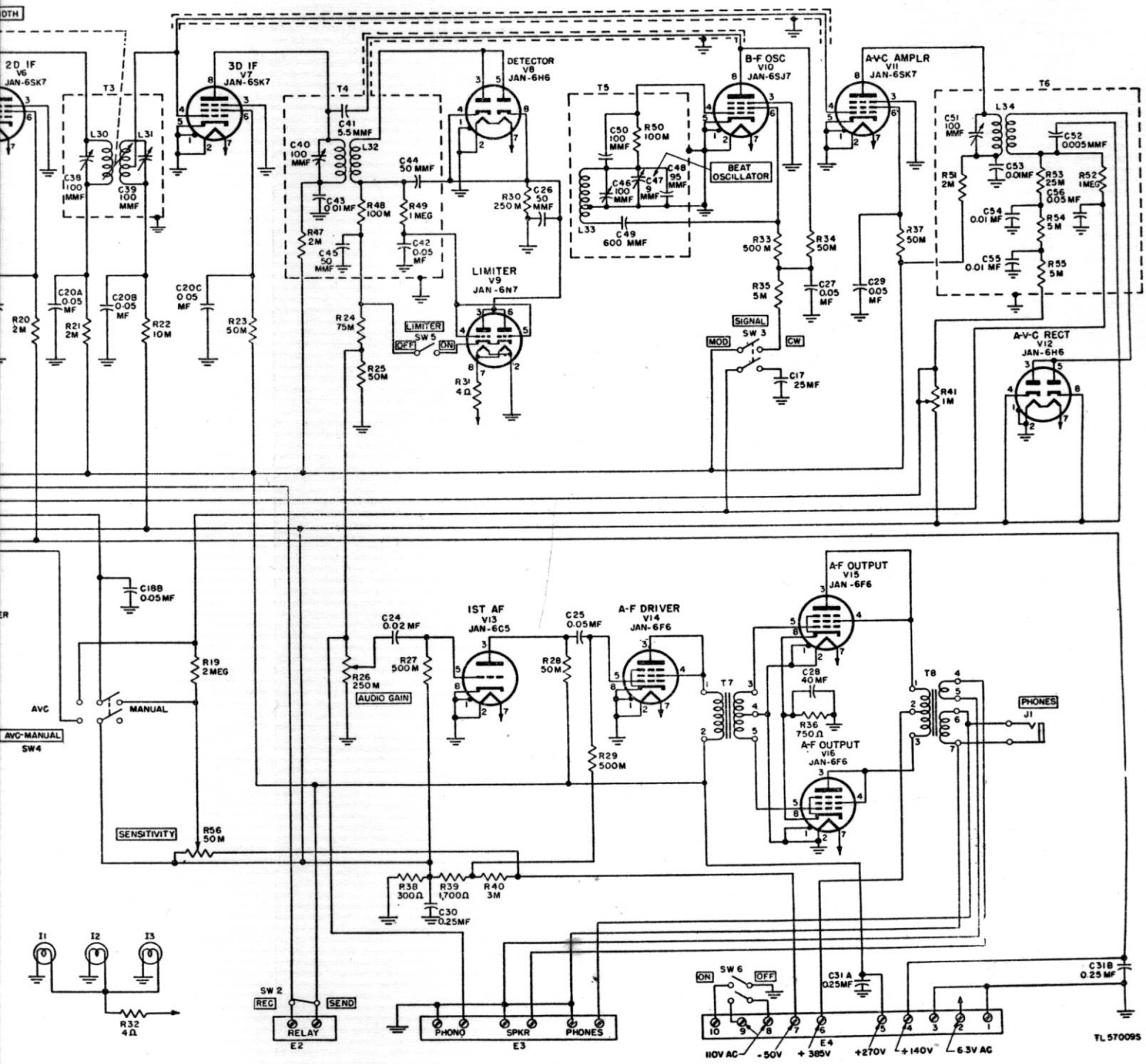

agram.

ManualsPlus.com

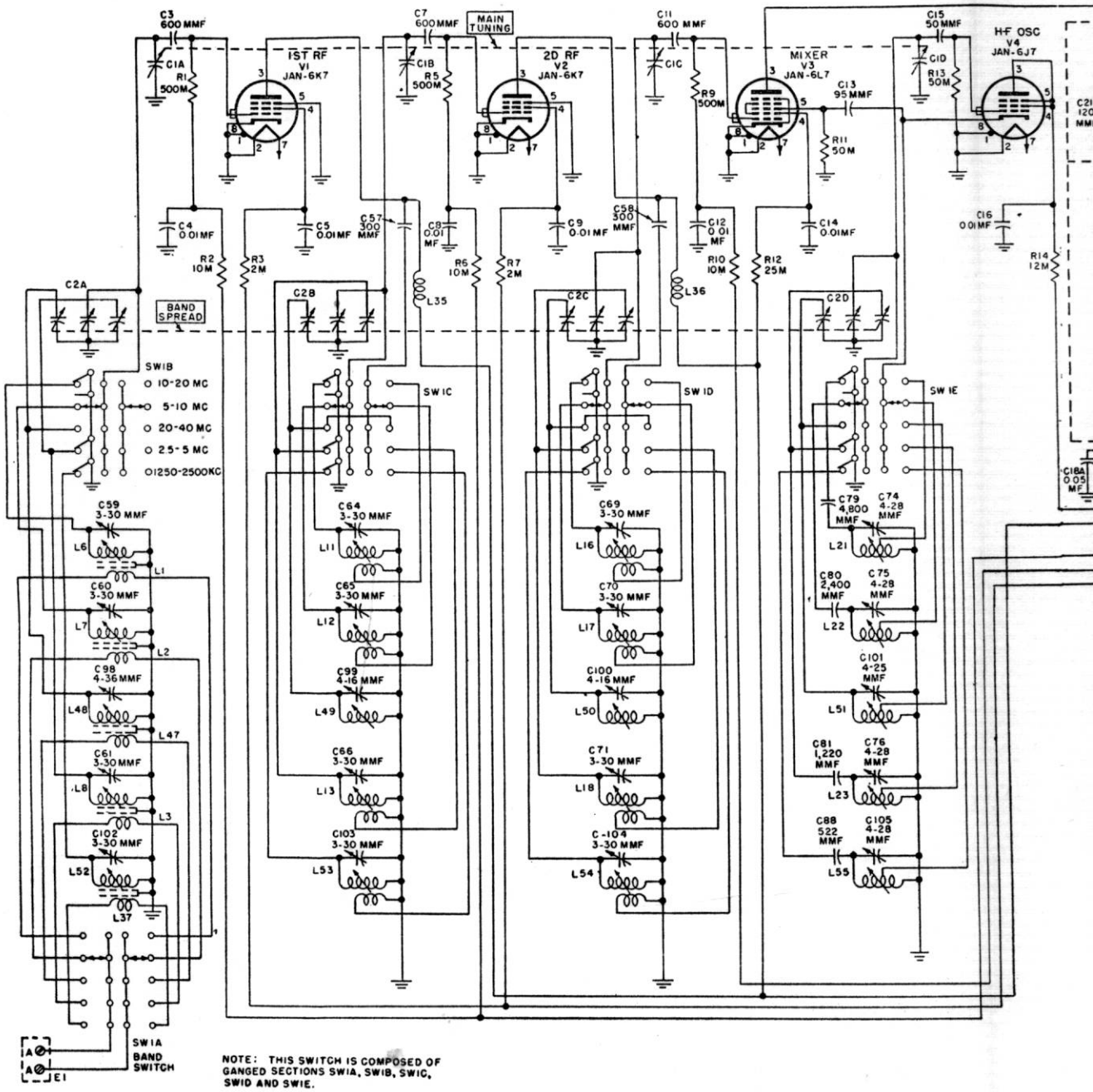

NOTE: THIS SWITCH IS COMPOSED OF GANGED SECTIONS SW1A, SW1B, SW1C, SW1D AND SW1E.

ManualsPlus.com

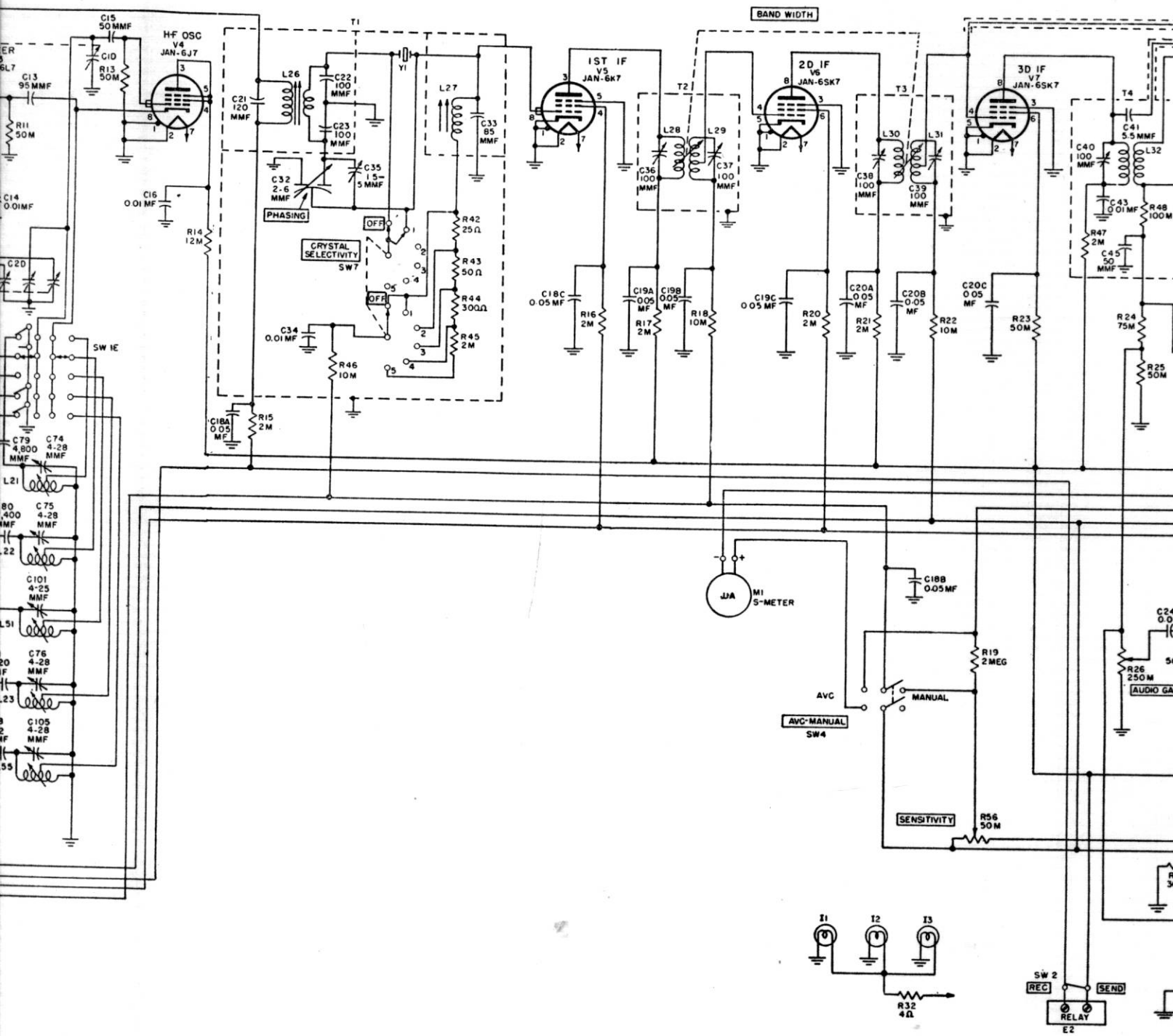

Figure 57. Radio Receiver BC-794-A, -B, schematic diagram.

ManualsPlus.com

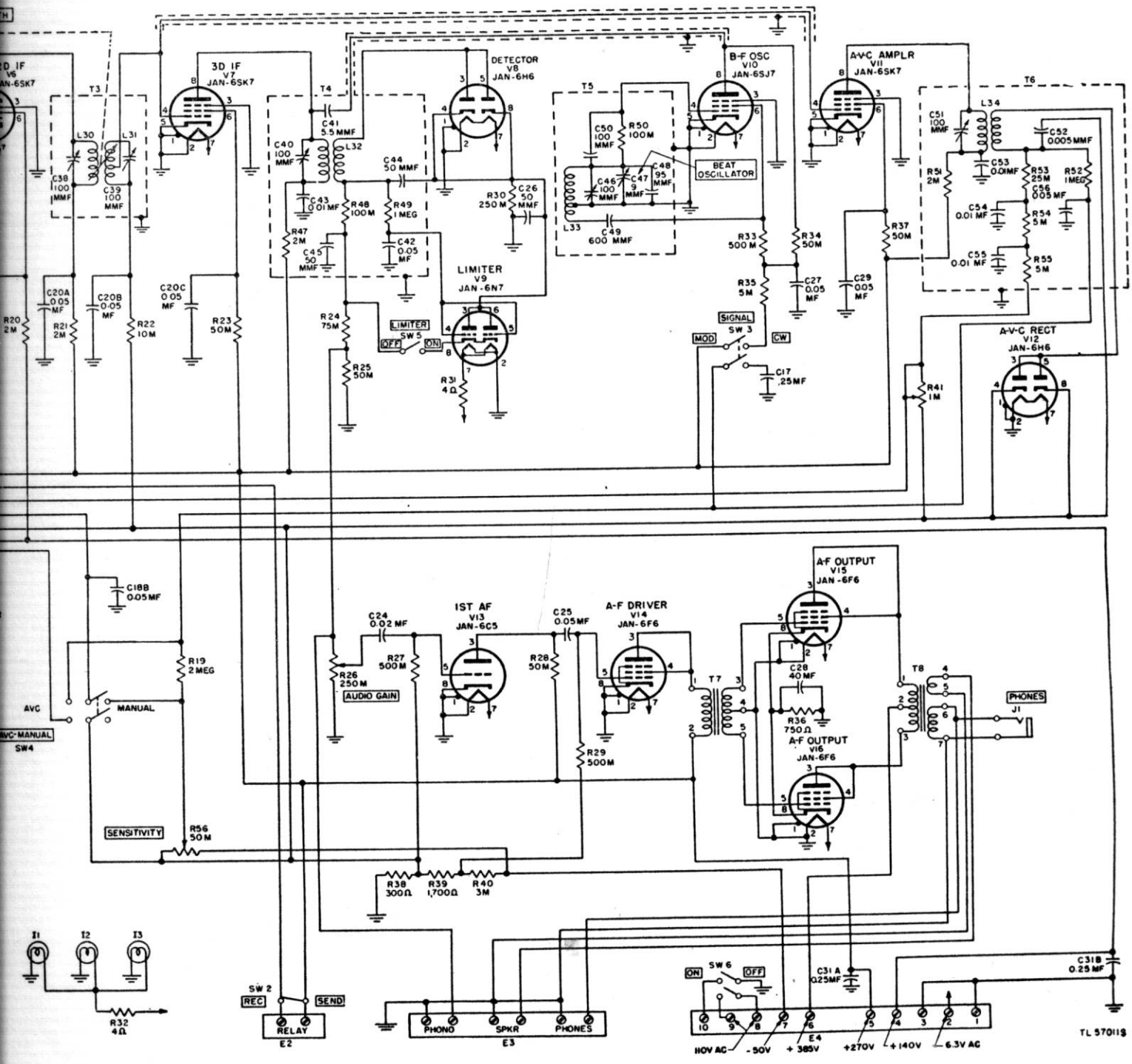

iagram.

ManualsPlus.com

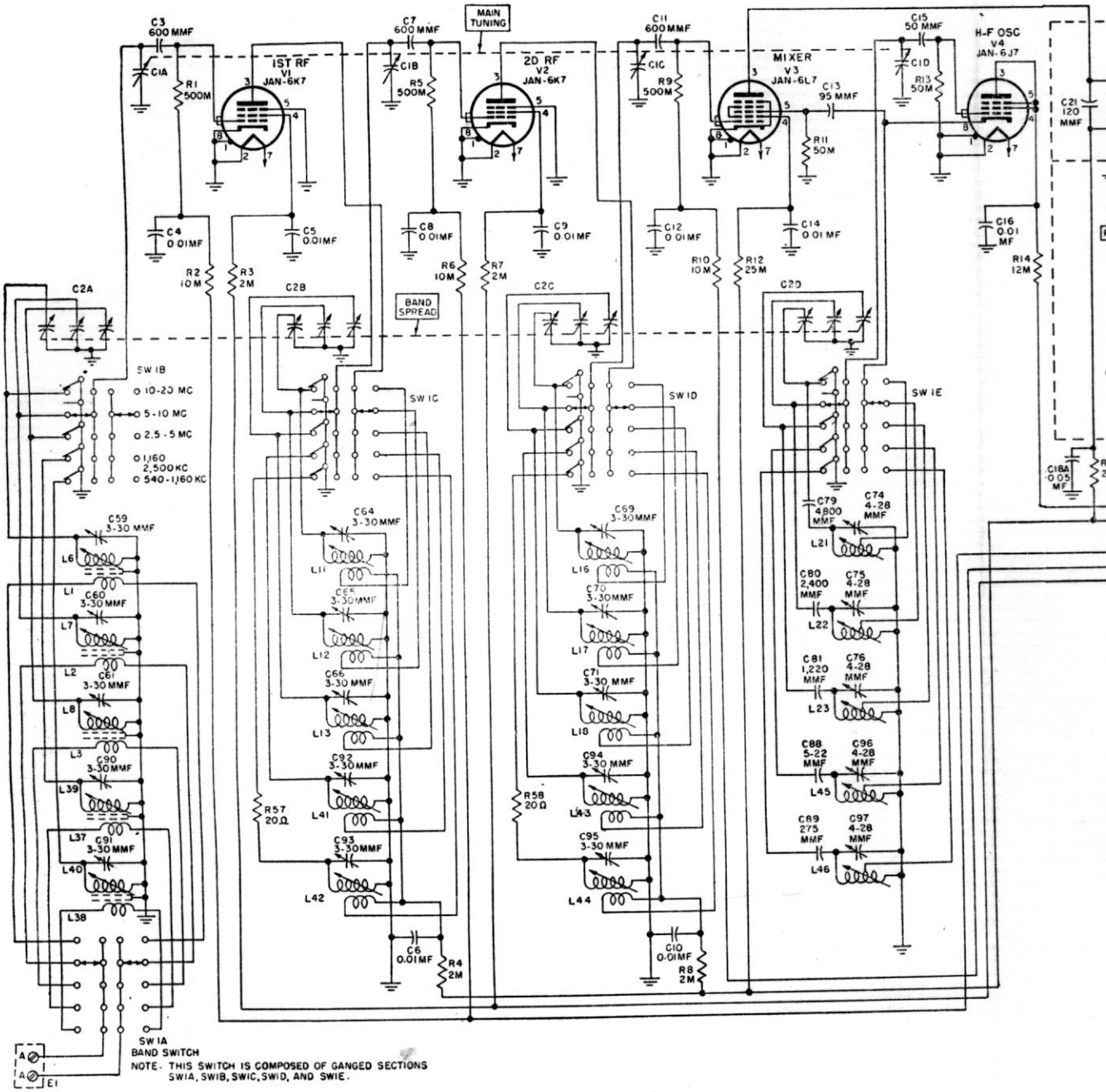

ManualsPlus.com

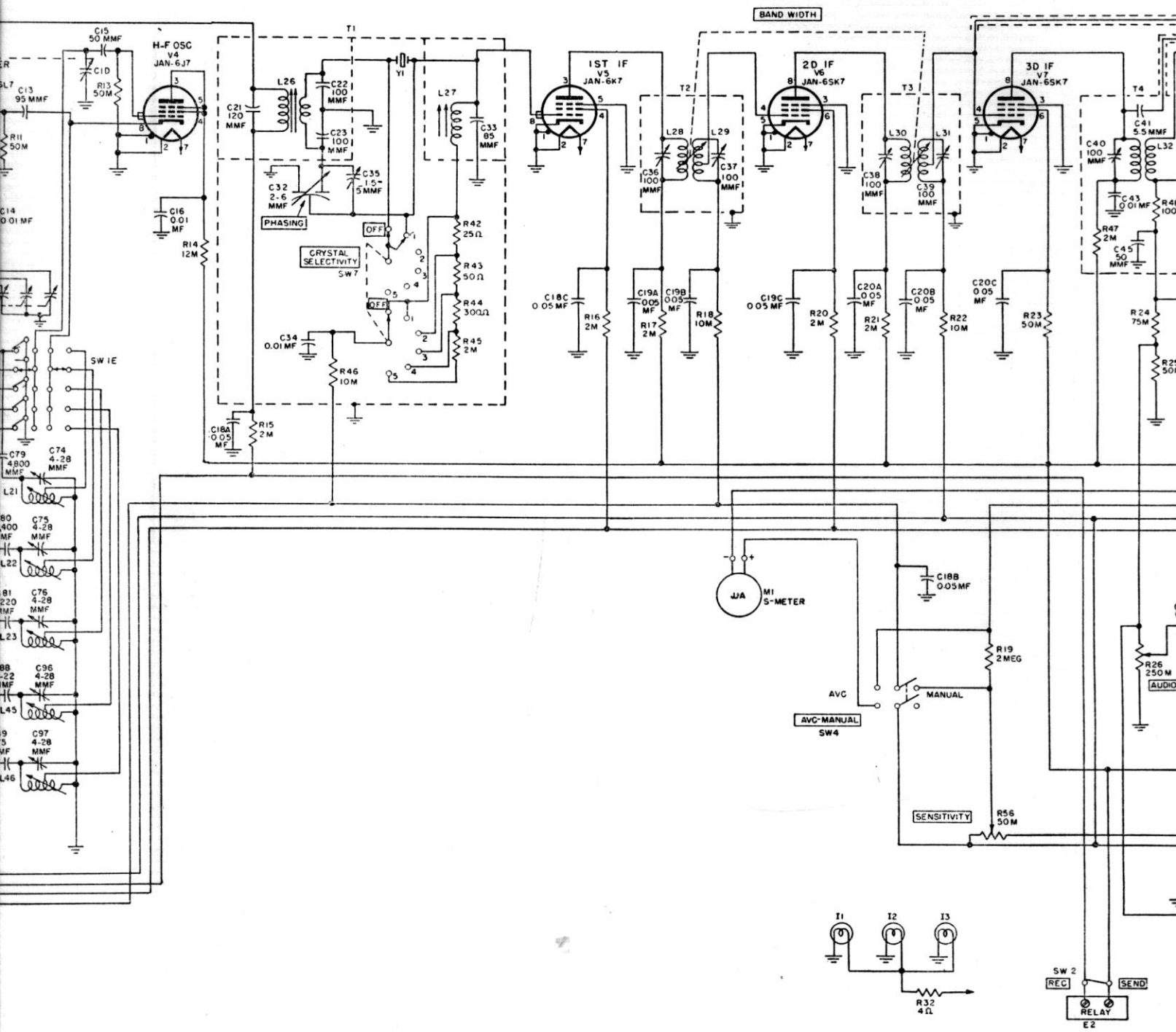

Figure 58. Radio Receiver BC-1004-B, -C, schematic diagram.

ManualsPlus.com

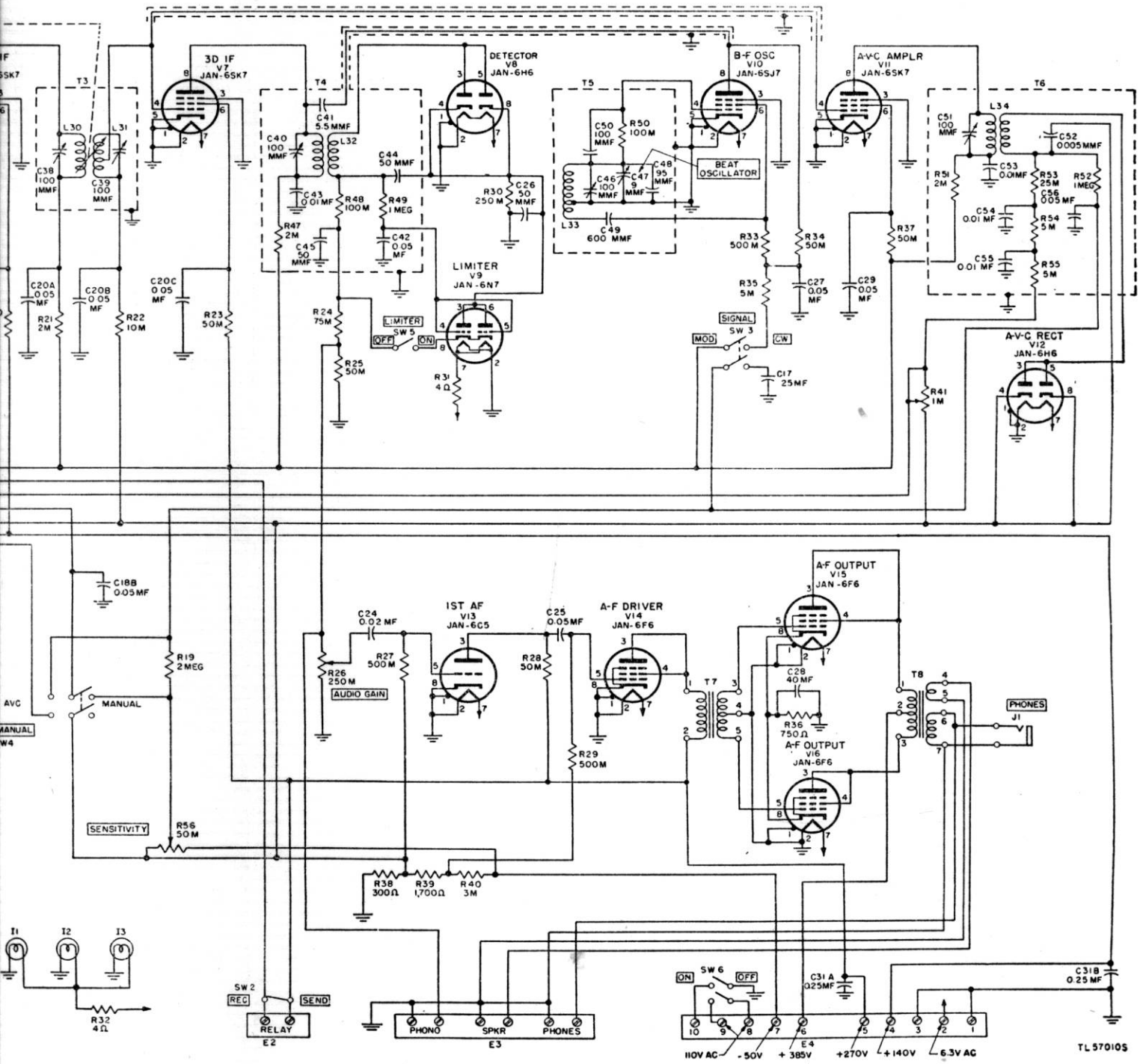

ManualsPlus.com

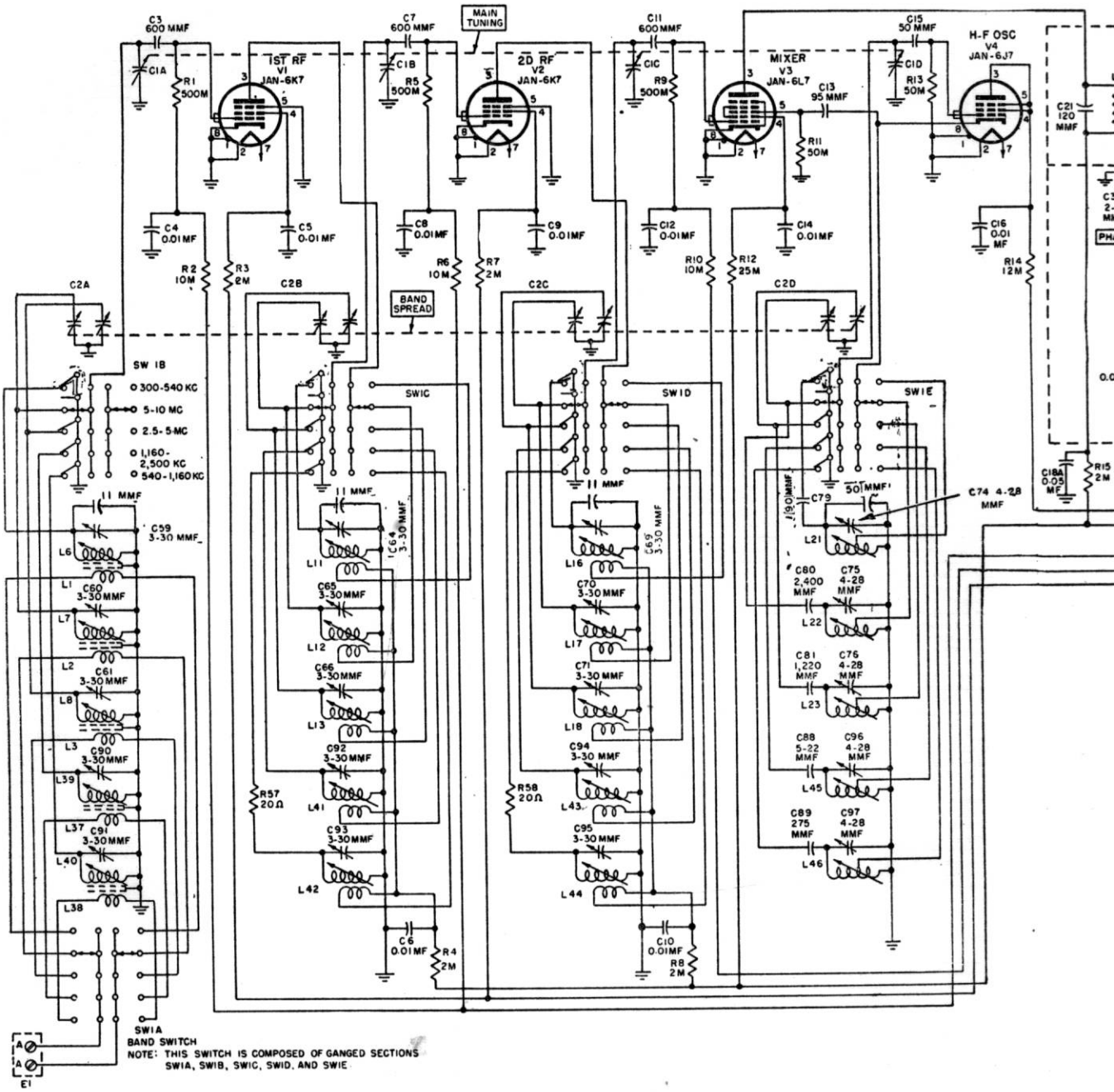

ManualsPlus.com

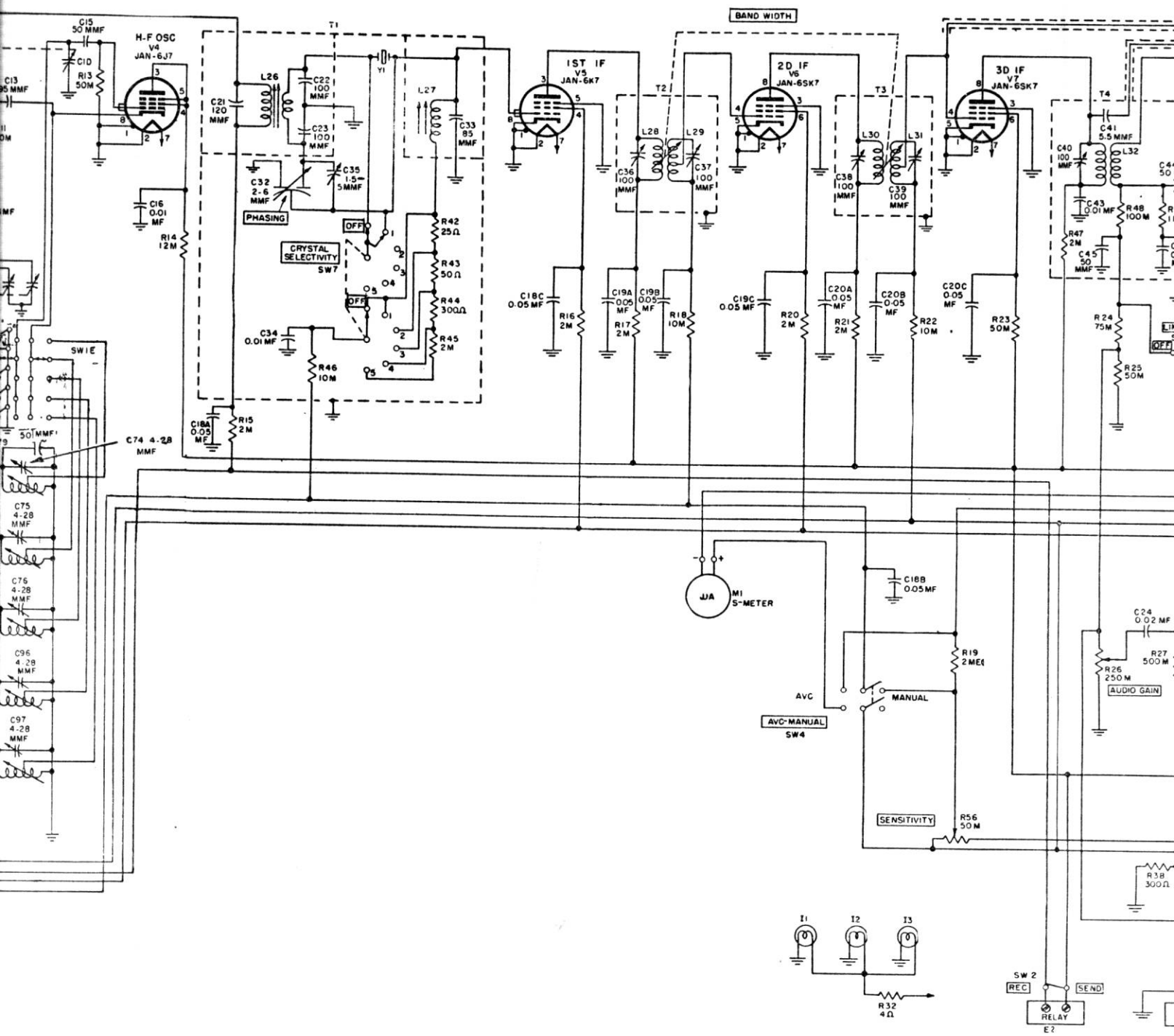

Figure 59. Radio Receiver R–129/U, schematic diagram.

ManualsPlus.com

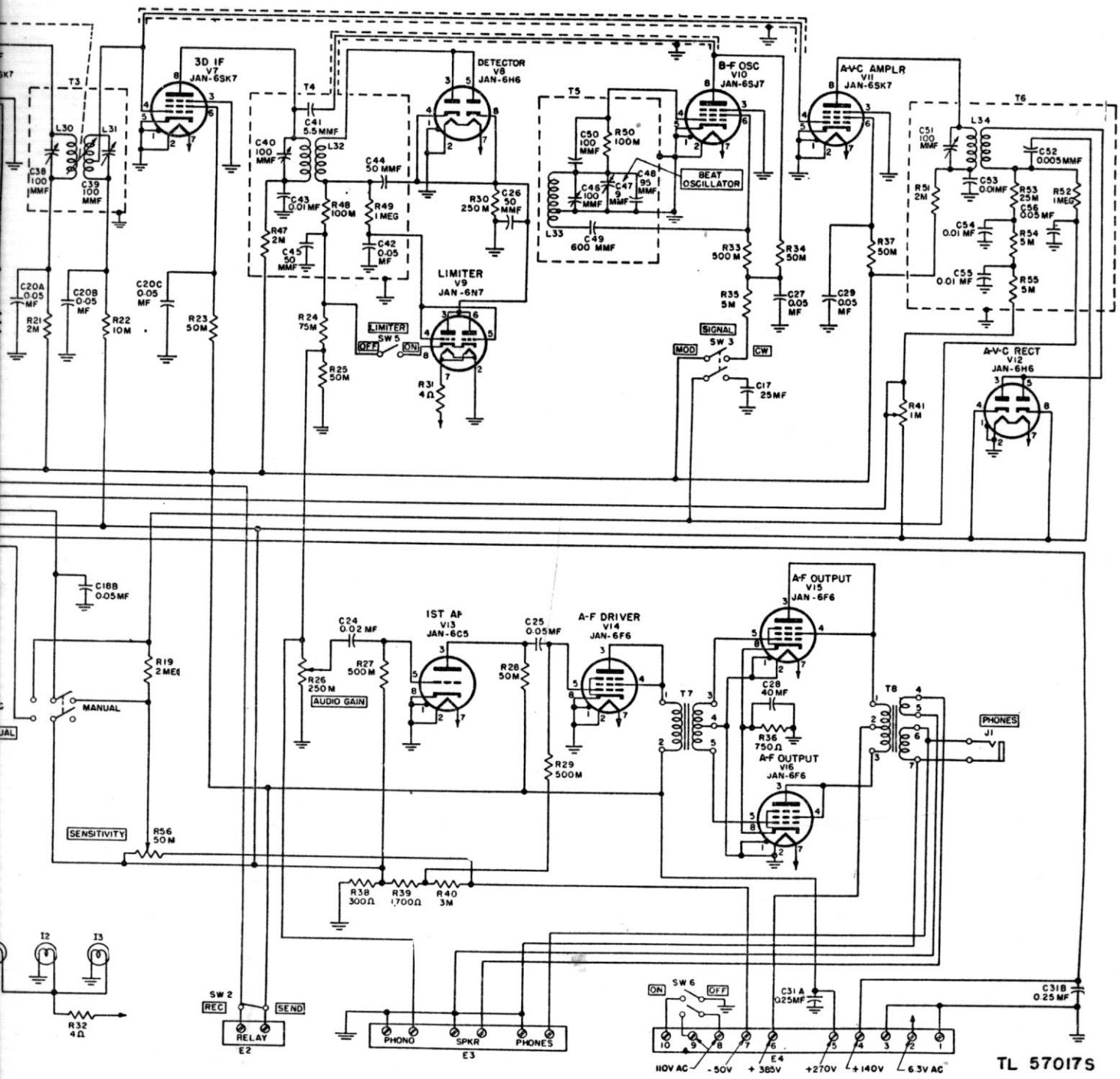

ManualsPlus.com

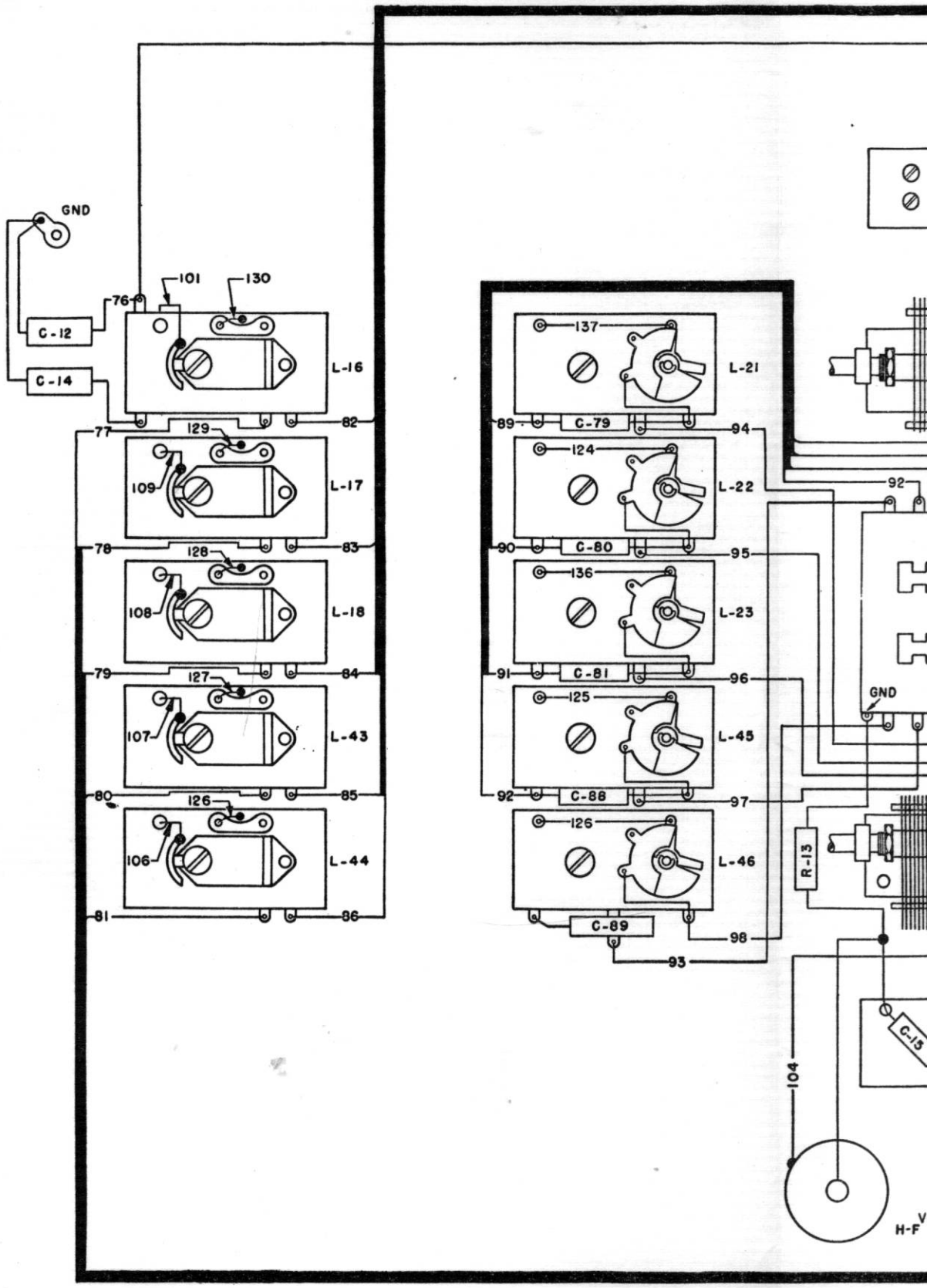

ManualsPlus.com

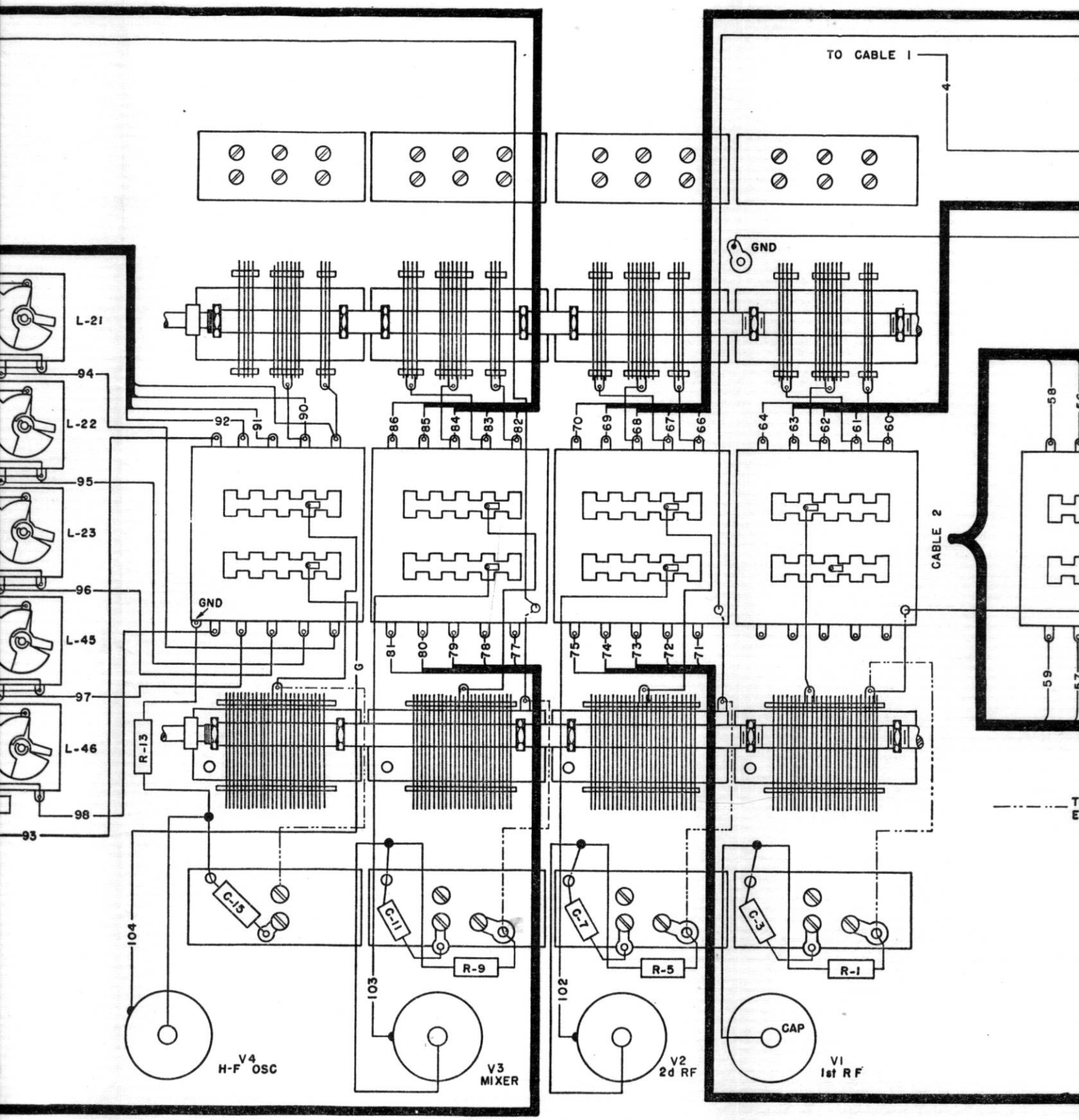

Figure 61. Receiver tuning unit, wiring diagram.

ManualsPlus.com

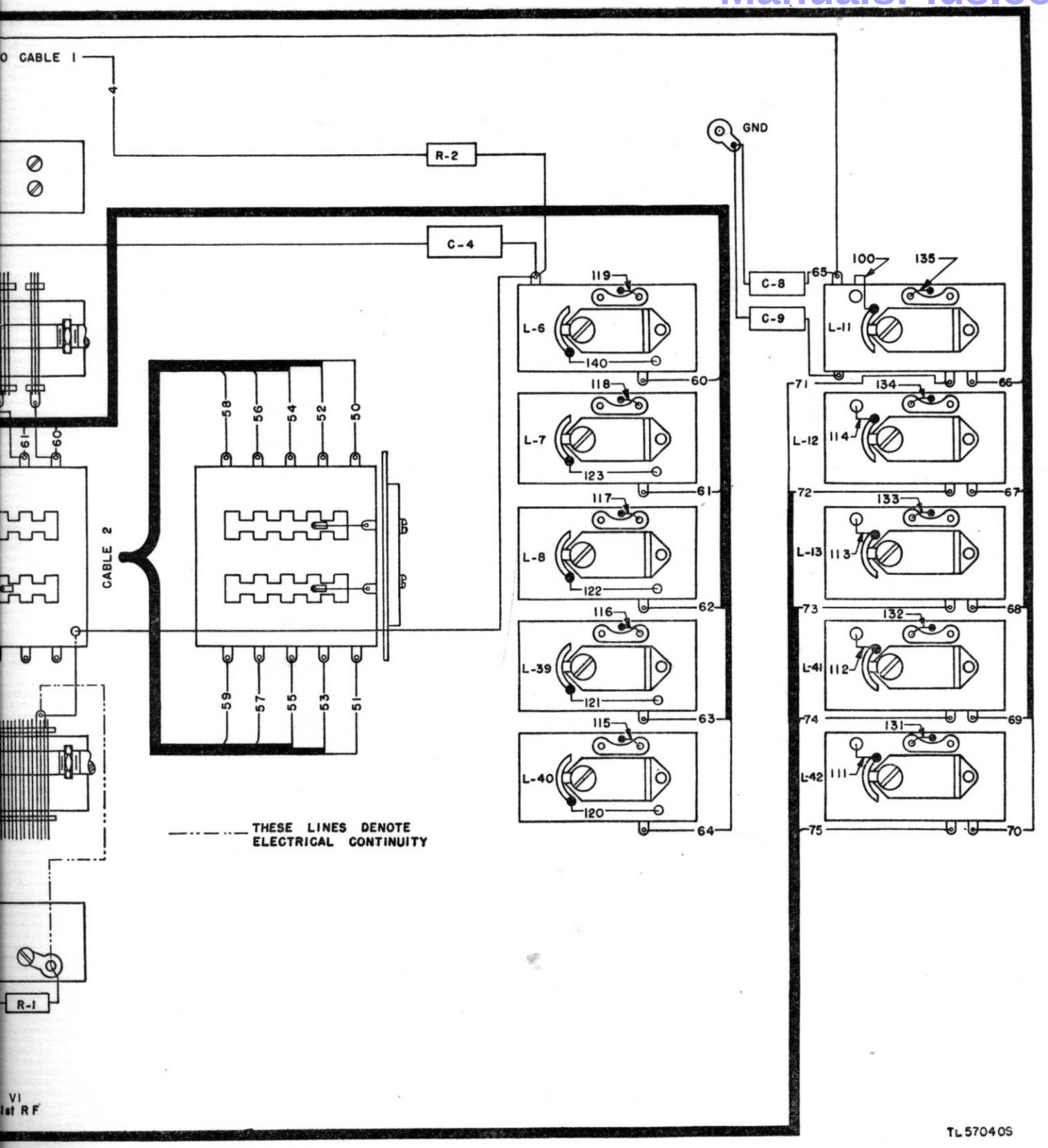

TL 57040S

☆ U. S. GOVERNMENT PRINTING OFFICE: 1948—751744-143

ManualsPlus.com

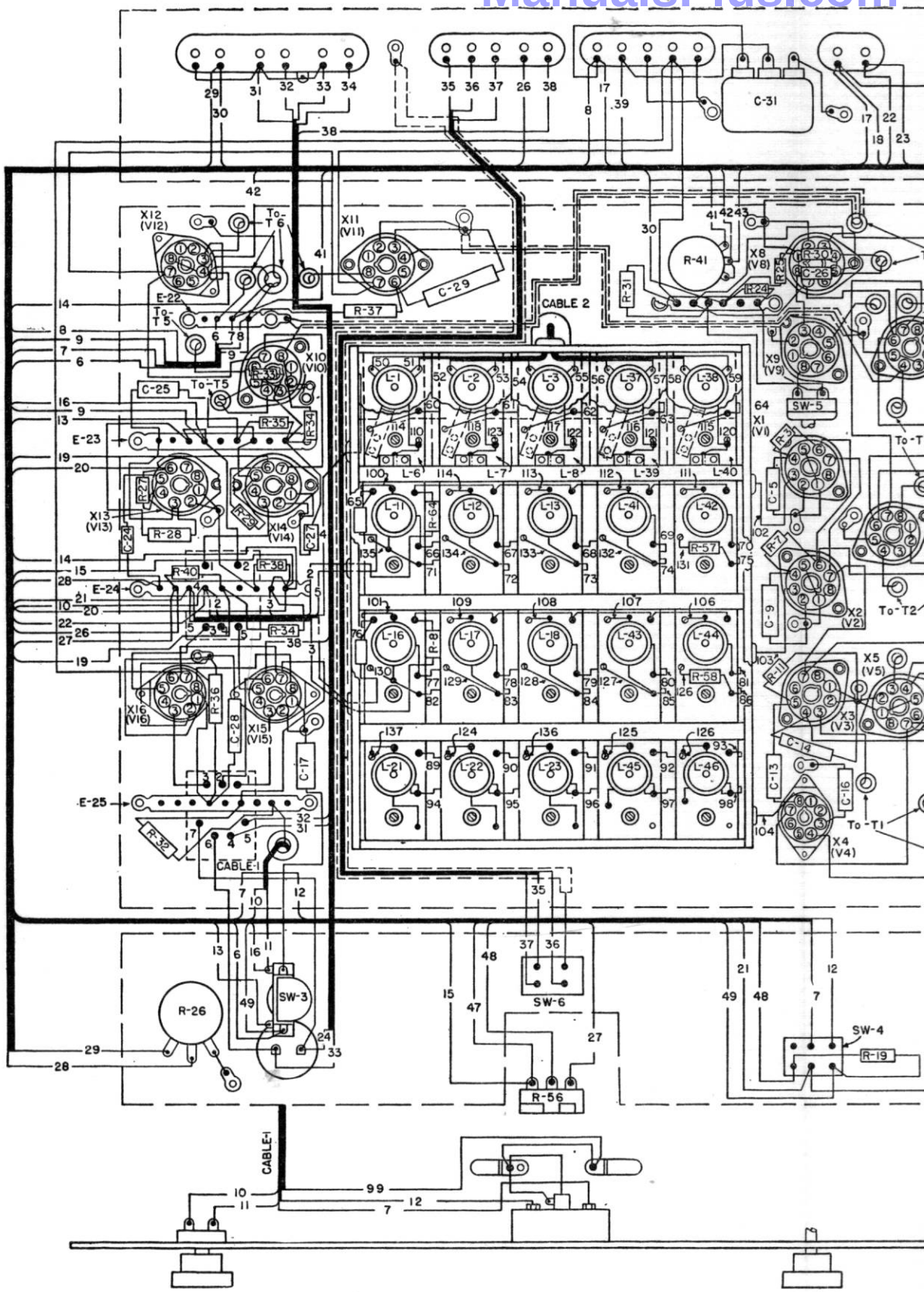

Figure 60. Receiver chassis, wiring diagram.

ManualsPlus.com

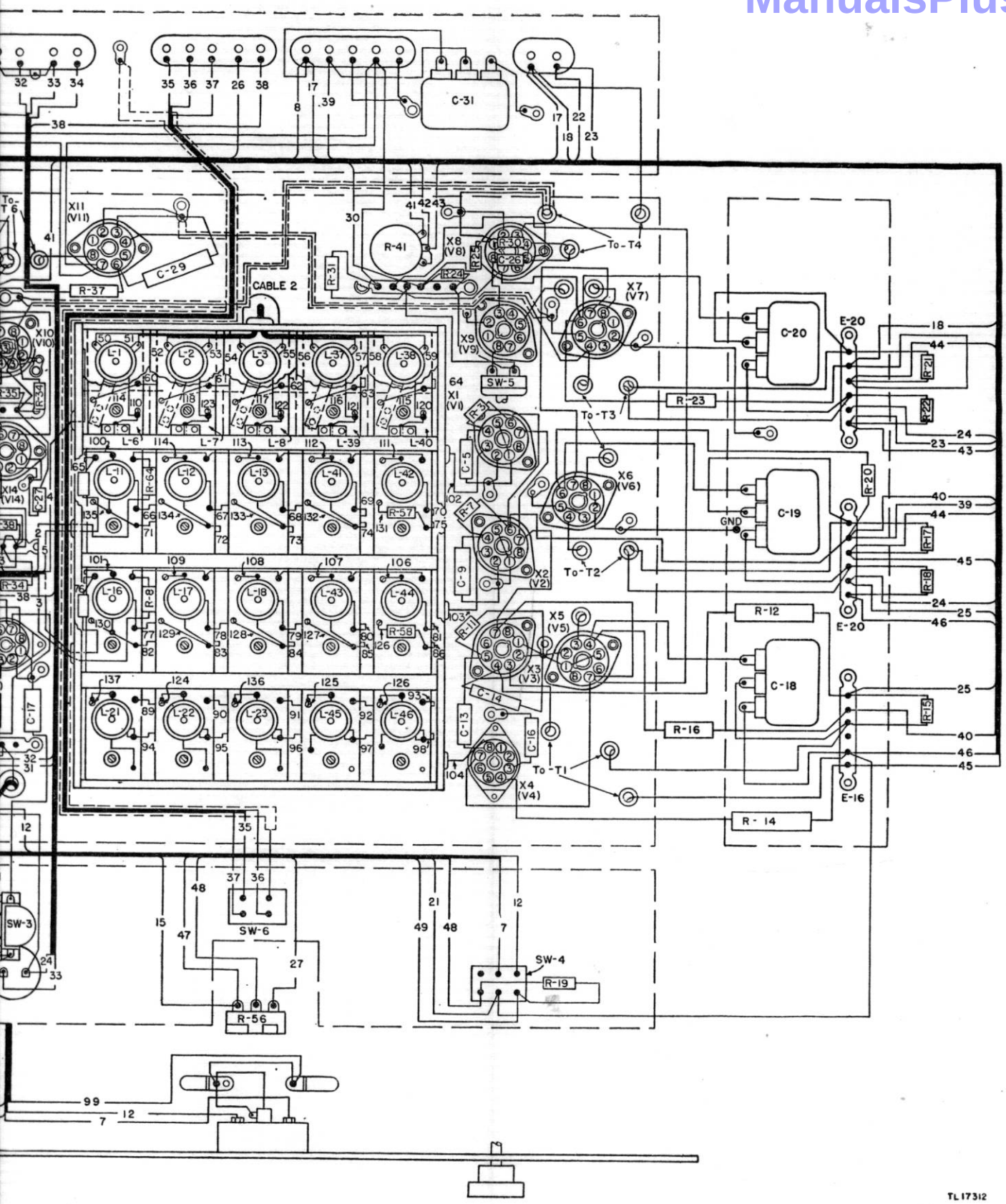

Figure 60. Receiver chassis, wiring diagram.

ManualsPlus.com

TECHNICAL MANUAL

RADIO RECEIVERS BC-779-A, -B; BC-794-A, -B; BC-1004-B, -C, -D; and R-129/U; POWER SUPPLY UNITS RA-74-B, -C-D; RA-84-A, -B; and RA-94-A; RADIO SETS SCR-244-A, -B; SCR-704; and AN/FRR-4 (HAMMARLUND SUPER PRO RECEIVER)

CHANGES No. 1

DEPARTMENT OF THE ARMY
WASHINGTON 25, D. C., *20 May 1949*

TM 11-866, 12 February 1948, is changed as follows:

That part of the title referring to Power Supply Units RA-74-B, -C is changed to read: **POWER SUPPLY UNITS RA-74-B, -C, -D**

1. General

* * * * *

c. The receivers are * * * their frequency ranges. This figure also shows **six** power supply units and their input requirements. Each of the * * * with any receiver.

* * * * *

f. (Added.) Power Supply Unit RA-74-(*) represents Power Supply Units RA-74-B, -C, and -D.

In figure 2, change designation "Power Supply Units RA-74-B, -C" to read: "Power Supply Units RA-74-B, -C, -D."

In tables I and II change RA-74-C to read: RA-74-C, -D.

8. Description of Power Supply Unit

The **six** power supply units are similar in appearance. Each one is * * * screws (fig. 7). **This dust cover is not supplied with Power Supply Unit RA-74-D.** The under side * * * supply connecting cable.

10. Differences in Models

* * * * *

g. (Added.) Power Supply Units RA-74-B, -C, and -D are physically and electrically interchangeable. However, Power Supply Unit RA-74-D differs from the other models in that the number of filter capacitors has been increased, additional resistors have been added, and preferred tube types are used. Moreover, the location of the resistors and capacitors in Power Supply Unit RA-74-D with serial numbers 1 through 390, Order No. 12618-Phila-47, differs from their location in Power Supply Unit RA-74-D with serial numbers 391 through 791, Order No. 6036-Phila-48.

13. Connections and Interconnections

* * * * *

e. A-C INPUT. Before plugging the * * * in figure 12. **The primary tap of Power Supply Unit RA-74-D is indicated in figures 44.1 and 44.2.** Connect the primary * * * bottom cover plate.

* * * * *

Figure 12. Bottom view of ***Power Supply Unit RA-94-A,*** *showing primary tap connection.*

Figure 14. Power Supply Unit ***RA-74-B, -C, RA-84-A, -B, or RA-94-A,*** *tube location.*

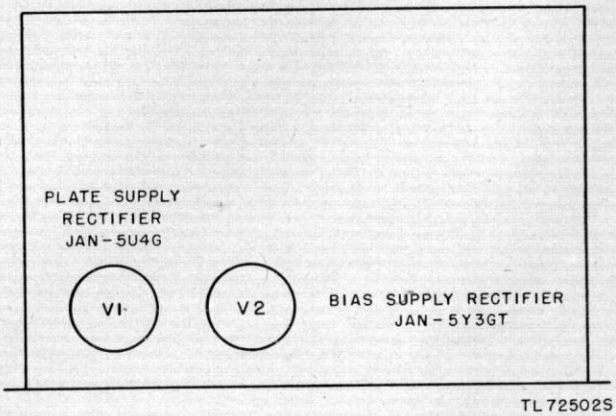

Figure 14.1 (Added.) *Power Supply Unit RA-74-D, tube location.*

ManualsPlus.com

14. Preparation for Use

a. TUBES. Check to see * * * on the receiver.

* * * * *

(2) *Power supply unit.* Take the dust * * * two rectifier tubes. **Figures** 14 **and 14.1 show** the location of these tubes.

* * * * *

70. Differences in Models

Power **Supply** Units RA–74–**B**, –**C**, RA–84–(*), and RA–94–A are electrically alike except for variations in power transformers T1, T2, and T3 (figs. 50, 51, and 52). The output of * * * input requirements vary. **Power Supply Unit RA–74–D is electrically similar to Power Supply Units RA–74–B and RA–74–C except for the following: types of tubes used, d–c resistance of L2, number and values of resistors, value of plate supply filter input capacitor, values of bias filter capacitors, reference symbols, and transformer wiring connections (fig. 50.1). Also, the physical location of the resistors and capacitors in Power Supply Unit RA–74–D with serial numbers 1 through 390, Order No. 12618–Phila–47, is not the same as their location in Power Supply Unit RA–74–D with serial numbers 391 through 791, Order No. 6036–Phila.–48.**

* * * * *

71. Circuit Details for Power Supply Units RA–74–B, –C, RA–84–A, –B, and RA–94–A.

* * * * *

71.1 (Added.) Circuit Details for Power Supply Unit RA–74–D.

a. Power transformer T1 (fig. 50.1) is connected to the power source by line cord W1 and is fused by 2-ampere, 250-volt fuse F1. Terminals 8 and 9 of terminal strip E1 are connected when the receiver ON-OFF switch is closed, thus completing the primary circuit of the transformer. The average power consumed is 180 watts.

b. The power unit furnishes filament, plate supply, and bias voltages to the receiver. The filament voltage, 6.3 volts ac, is obtained from secondary winding 10–11 on the transformer and applied to the receiver through terminals 1 and 2 on the terminal strip.

c. Plate supply voltage is supplied by the plate supply rectifier Tube JAN–5U4G, V1, connected in a full-wave circuit. The plates are connected to terminals 19 and 16 of the high-voltage center-tapped secondary. The center tap, terminal 17, is grounded. Filament supply for V1 is provided by secondary winding 12–13. After the voltage is rectified, it is filtered by the capacitor input pi-section filter consisting of choke L1, two 2-mf capacitors C1 and C2, and two 4-mf capacitors C3 and C4. The filtered voltage, which is connected to terminal 6, provides approximately 385 volts dc for the plates of a-f tubes V15 and V16 in the receiver. Further filtering by second filter choke L2 and two 4-mf capacitors C5 and C6 in parallel provides approximately 270 volts d-c plate and screen supply at terminal 5. Approximately 140 volts dc for screen grid supply is

ManualsPlus.com

obtained from the junction of resistors R1 and R2, which are part of the bleeder chain composed of bleeder resistors R11, R12, and through R4. This screen voltage is filtered by two more 4-mf capacitors C7 and C8 and is connected to terminal 4 on terminal strip E1.

d. Bias supply rectifier Tube JAN–5Y3GT, V2, is used in a half-wave rectifier circuit to supply bias voltages to the receiver. Filament supply for V2 is furnished by winding 14–15. The filament is connected to tap 18 on the high-voltage secondary. The a-c voltage across the 17 and 18 windings of the high-voltage secondary is thus applied to V2. Since tap 17 is grounded, the plate of V2 is at a negative potential. The rectified output of V2 is filtered by resistors R5 through R10 and 4-mf capacitors C9 through C12. When connected to the receiver, the voltage at the end of this filter, terminal 7 on E1, is approximately —50 volts.

74. Trouble-shooting Data

Take advantage of * * * trouble-shooting data:

* * * * *

b. Power Supply Unit.

Fig. No.	Description
50	Power Supply Unit RA–74–B, –C, schematic diagram.
50. 1	**Power Supply Unit RA–74–D, schematic diagram.**
*	* * * *
45	**Power Supply Unit RA–74–B, –C, RA–84–A, –B, and RA–94–A, tube** socket voltage and resistance chart.
45. 1	**Power Supply Unit RA–74–D, tube socket voltage and resistance diagram.**
45. 2	**Power Supply Unit RA–74–D, with serial numbers 391 through 791, Order No. 6036–Phila–48, diagram.**
43	Power **Supply Unit RA–94–A,** chassis, top view.
43. 1	**Power Supply Unit RA–74–D, with serial numbers 1 through 390, Order No. 12618–Phila–47 chassis, top view.**
43. 2	**Power Supply Unit RA–74–D, with serial numbers 391 through 791, Order No. 6036–Phila–48, chassis, top view.**
*	* * * *
44. 1	**Power Supply Unit RA–74–D, with serial numbers 1 through 390, Order No. 12618–Phila–47, chassis, bottom view.**
44. 2	**Power Supply Unit RA–74–D, with serial numbers 391 through 791, Order No. 6036–Phila–48, chassis, bottom view.**

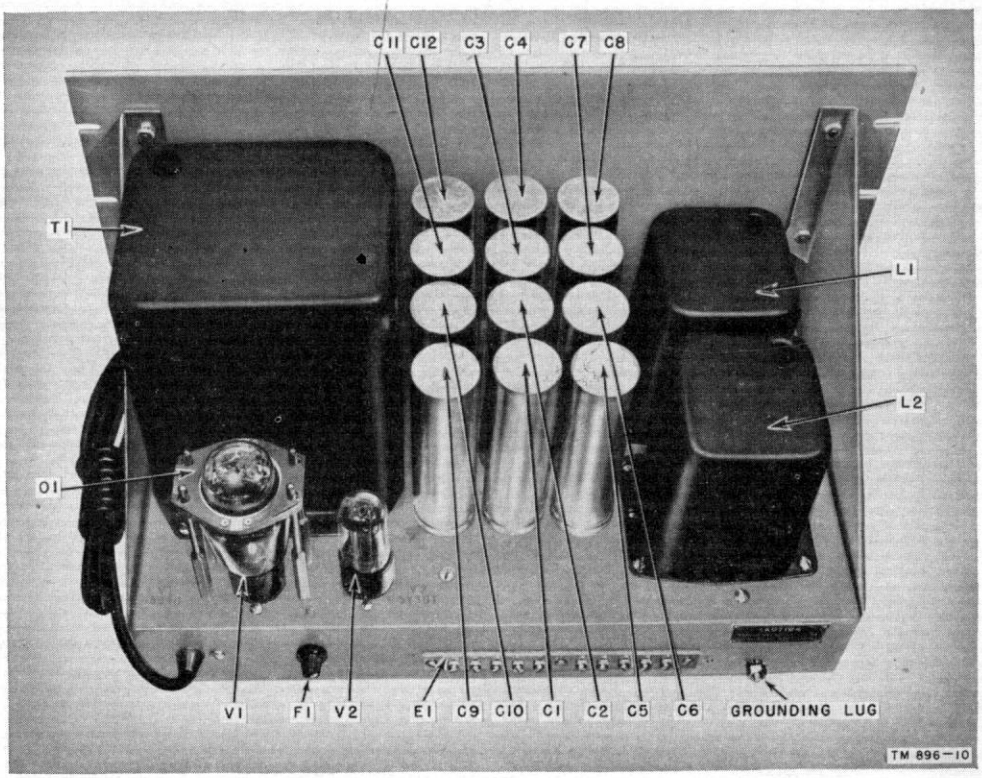

Figure 43.1 (Added.) *Power Supply Unit RA–74–D, with serial numbers 1 through 390, Order No. 12618–Phila–47, chassis, top view.*

ManualsPlus.com

Figure 43.2 (Added.) *Power Supply Unit RA–74–D, with serial numbers 391 through 791, Order No. 6036–Phila–48, chassis, top view.*

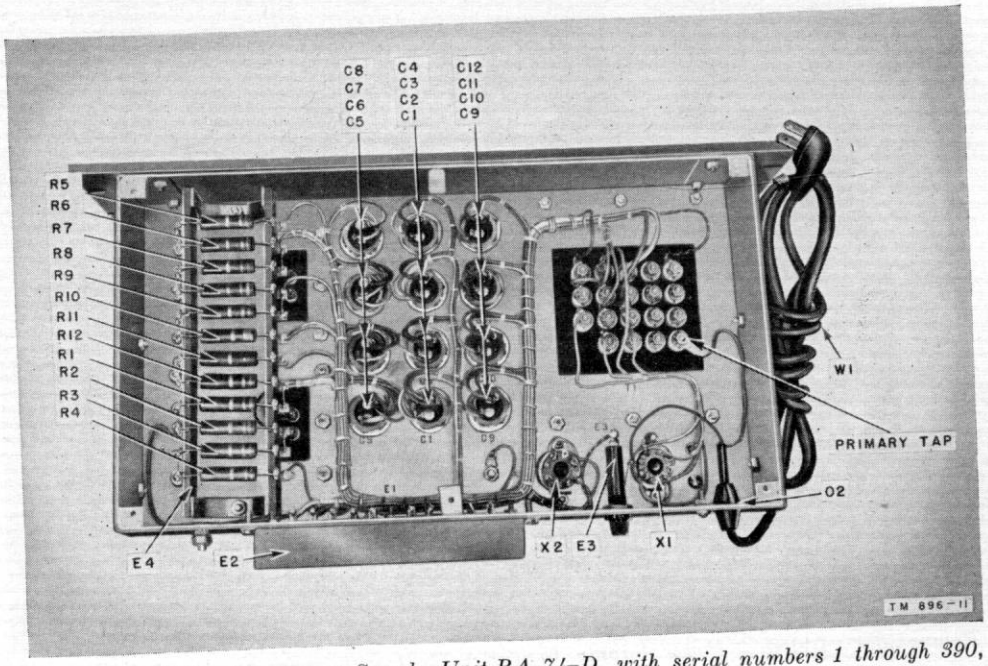

Figure 44.1 (Added.) *Power Supply Unit RA–74–D, with serial numbers 1 through 390, Order No. 12618–Phila–47, chassis, bottom view.*

ManualsPlus.com

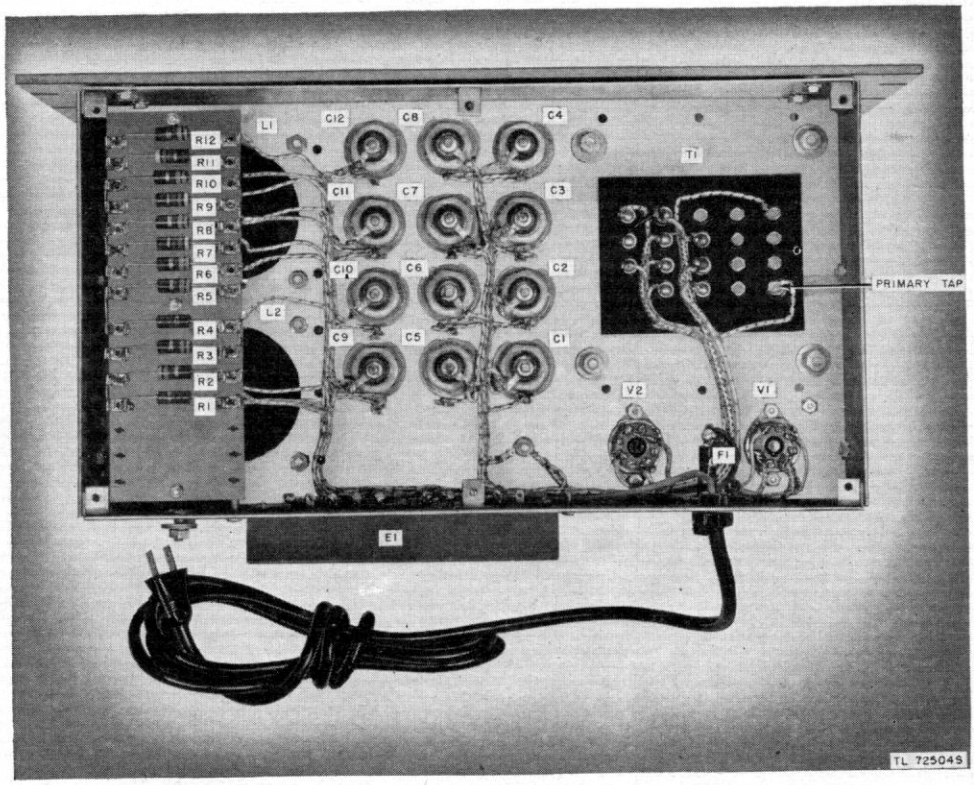

Figure 44.2 (Added.) *Power Supply Unit RA–74–D, with serial numbers 391 through 791, Order No. 6036–Phila–48, chassis, bottom view.*

Figure 45. Power Supply Unit ***RA–74–D, –C, RA–84–A, –B, and RA–94–A,*** *tube socket voltage and resistance diagram.*

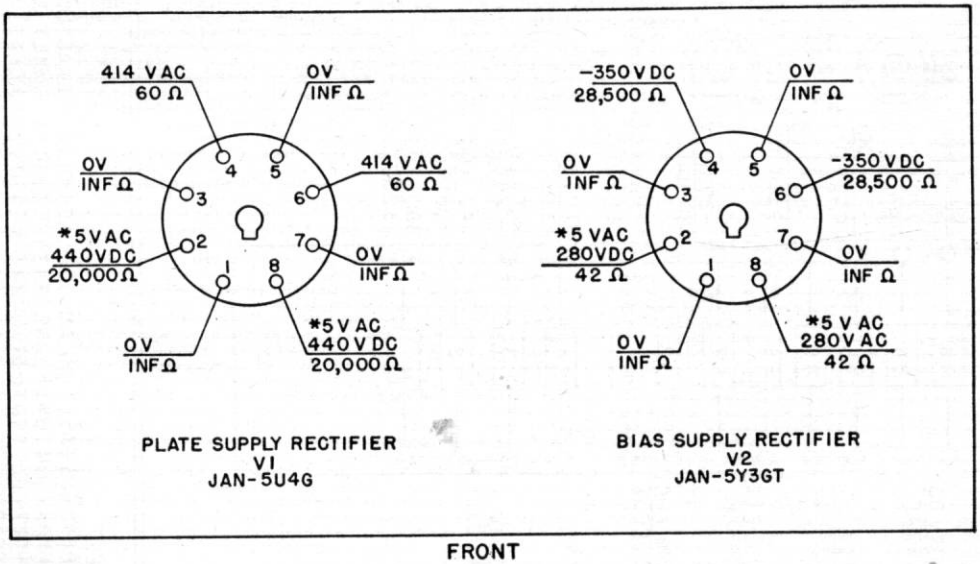

NOTES:
1 A-C LINE VOLTAGE EQUAL TO PRIMARY TAP ON POWER TRANSFORMER.
2 LOADED BY PROPERLY CONNECTED RECEIVER.
3 VOLTAGES MEASURED TO CHASSIS WITH A 1,000 OHM-PER-VOLT METER.
4 *MEASURED ACROSS FILAMENTS.

TL72506S

Figure 45.1 (Added.) *Power Supply Unit RA–74–D, tube socket voltage and resistance diagram.*

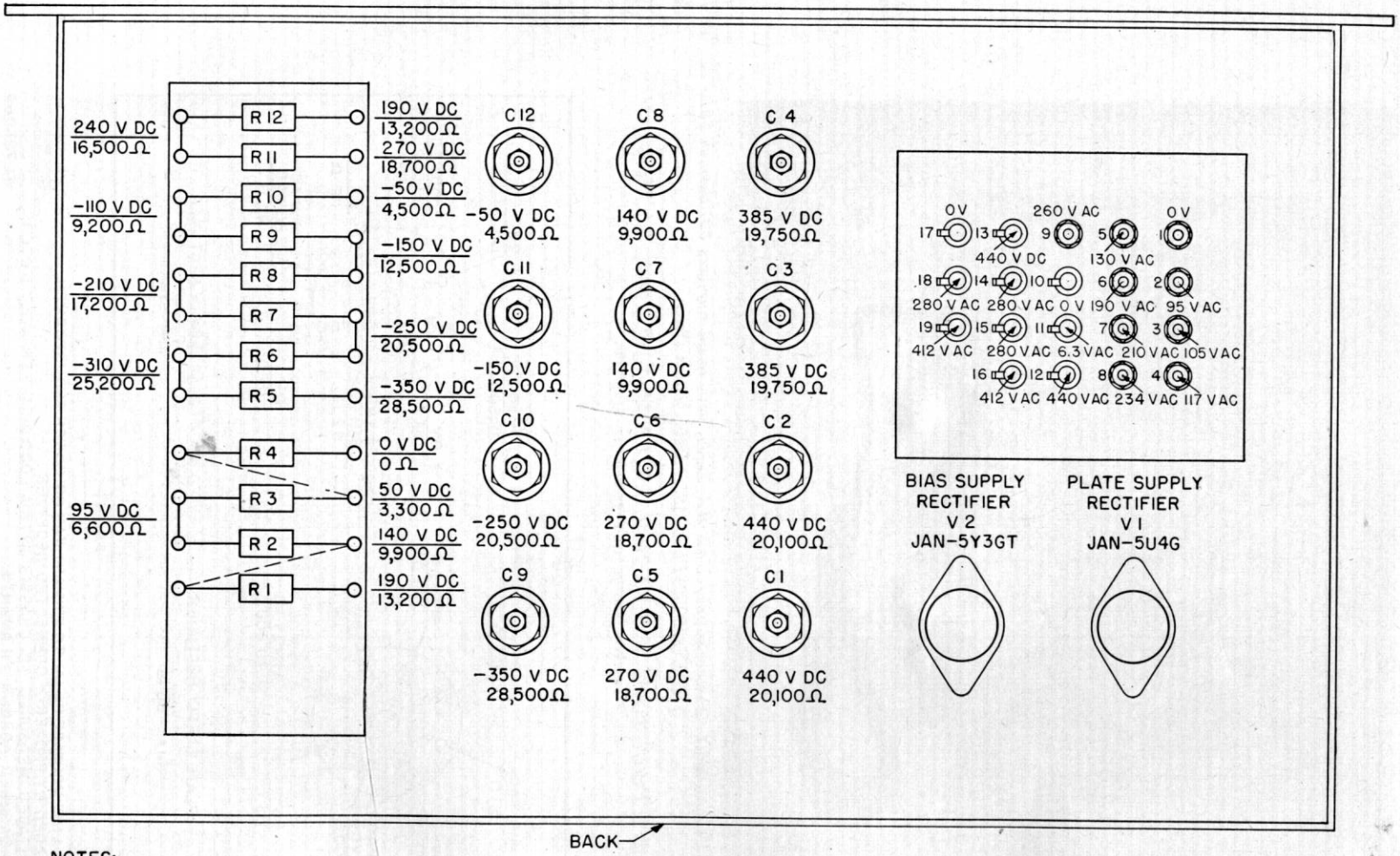

NOTES:

1 READINGS BASED ON AN A.C. LINE VOLTAGE EXACTLY EQUAL TO THE PRIMARY TAP ON THE POWER SUPPLY UNIT POWER TRANSFORMER. HIGHER OR LOWER LINE VOLTAGE SHOULD RESULT IN CORRESPONDING VARIATIONS IN THESE READINGS.

2 VOLTAGES AND RESISTANCES MEASURED TO CHASSIS WITH A 1,000 OHM-PER-VOLT METER.

3 SENSITIVITY AND AUDIO GAIN OF RECEIVER AT 0.

TL 72507S

Figure 45.2 (Added.) *Power Supply Unit RA-74-D, with serial numbers 391 through 791, Order No. 6036-Phila-48, voltage and resistance diagram.*

ManualsPlus.com

ManualsPlus.com

APPENDIX II

IDENTIFICATION TABLE OF REPLACEABLE PARTS

6. (Added.) Identification Table of Replaceable Parts for Power Supply Unit RA–74–D

Ref symbol	Name of part and description	Function of part	Signal Corps stock No.
	POWER SUPPLY: Sig C Power Supply Unit RA–74–D; electronic type; output 380 v DC at 50 ma, 250 v DC at 100 ma, approx 100 v DC at 4.5 ma, "C" bias approx 50 v DC at 11 ma; input 95/105/117/130/190/210/234/260 v AC, single ph, 25–60 cyc, 180 w; chassis w/std 19" rack panel, 19" lg x 10½" h x 10" d; 1 Tube JAN–5Y3GT half-wave, 1 JAN–5U4G full-wave; built-in filter.	Furnishes a-c and d-c operating voltages for Radio Receiver R–270/FRR, or Radio Receivers BC–779–A, –B; BC–794–A, –B; BC–1004–B, –C, –D; and R–129/U.	3H4496–74D.
E1	BOARD, terminal: connecting power to receiver; 10 screw term; arranged in groups of 5 term ea; phenolic; term numbered 1 to 10; Jones HB per Hammarlund #3838.	Receiver connections	2C4528/35.
W1	CABLE, power: Sig C Cordage Co–144; Underwriters type "S"; 2 #18 AWG cond ea comprising 41 #32 AWG strands; RC; ¼" OD; Sig C spec #71–684.	A-c line cord	3E2144.
C1 thru C12	CAPACITOR, fixed: paper dielectric; 4.0 mf +20%–10%, 600 vdcw; max body dimen 4½" lg x 1½" diam; JAN type CP41B1EF–405V.	C1 thru C8—Plate supply filter. C9 thru C12—Bias supply filter.	3DB4–288.
	CONNECTOR, plug: 2 flat parallel male blade cont; straight; 1 9/16" OD x 1¼" lg less cont; 15 amp, 125 v, 10 amp, 250 v; cylindrical steel body, cad pl; bakelite insert; cable opening 9/32" diam w/cable clamp; Hubbel #7057.	A-c plug	6Z1727.
F1	FUSE FU–27: cartridge; 2 amp, 250 v; glass body; ferrule term; 1¼" lg x ¼" diam over-all.	Overload protector	3Z1927.
E3	HOLDER, fuse: extractor post: for #3AG cartridge fuse; molded black bakelite body; 125 v AC or DC, 10 amp max; 2⅛" lg x ¾" diam over-all, 2 solder lug term; red extractor knob; Littelfuse #341001.	For fuse F1	3Z3275.
L1	REACTOR: filter choke; 21.2 min hy, 160 ma; 350 ohms approx DC resistance; 2500 v RMS test; HS metal case; 4½" lg x 3⅝" wd x 4⅝" h excl term; 6 holes 7/32" diam w/1⅜" ctrs spaced 3⅞"; per JAN–T–27 Chi Trans #7410E.	Smoothing choke	3C317–54.
L2	REACTOR: filter choke; 45 min hy, 120 ma; 1050 ohms approx DC resistance; 2500 v RMS test; HS metal case; 4½" lg x 3⅝" wd x 4⅝" h excl term; 6 holes 7/32" diam w/1⅜" ctrs spaced 3⅞"; per JAN–T–27; Chi Trans #12522.	Smoothing choke	3C317–55.
R1 thru R5, R7, R9, R12	RESISTOR, fixed: comp; 3300 ohms ±5%; 2 w; max body dimen 1.78" lg x 0.405" diam; JAN type RC41BF332J.	R1 thru R4 and R12—Part of plate supply voltage divider. R5, R7, R9—Part of bias supply filter.	3RC41BF332J.
R6, R8 R10	RESISTOR, fixed: comp; 4700 ohms ±5%; 2 w; max body dimen 1.78" lg x 0.405" diam; JAN type RC41BF472J.	Part of bias supply filter	3RC41BF472J.

ManualsPlus.com

Ref symbol	Name of part and description	Function of part	Signal Corps stock No.
R11	RESISTOR, fixed: comp; 2200 ohms ±5%; 2 w; max body dimen 1.78″ lg x 0.405″ diam; JAN type RC41BF222J.	Part of plate supply voltage divider.	3RC41BF222J.
01	RETAINER, tube: consists of 4 hex base stainless steel posts and removable spring retainer assembly to fit ST–16 type glass bulb; mts w/#10 screws in 4 mtg holes on rectangular ctrs 2 3/16″ x 7/8″; WECo part/dwg #D152560.	Holds Tube JAN–5U4G rectifier in socket.	2Z7780–19.
X1, X2	SOCKET, tube; octal; one-piece saddle mtg; two 5/32″ diam holes on 1½″ mtg/c; round molded phenolic body; 1⅛″ diam x ½″ h excl term; beryllium copper silver pl wrap-around type contacts; Cinch #9661.	Tube sockets	2Z8678.300.
T1	TRANSFORMER, power: filament and plate type; input 95 to 260 v, 25–60 cyc, single ph; pri taps at 95/105/117/130/190/210/234 and 260 v; 4 output secd windings: secd #1, 5 v, 3 amp; secd #2, 5 v, 2 amp; secd #3, 6.3 v, 7 amp; secd #4 830 v CT, 170 ma and tap at 270 v from CT at 28 ma; 3000 v ins; HS metal case; 5⅞″ lg x 6½″ wd x 7½″ h over-all; 19 ins thd post type term on bottom of case; six ¼″ diam holes w/2⅛″ ctrs; per JAN–T–27; Chi Trans #1270S.	Power transformer	2Z9608–91.
V1	TUBE, electron: JAN–5U4G	Plate supply rectifier	2J5U4G.
V2	TUBE, electron: JAN–5Y3GT	Bias supply rectifier	2J5Y3GT.

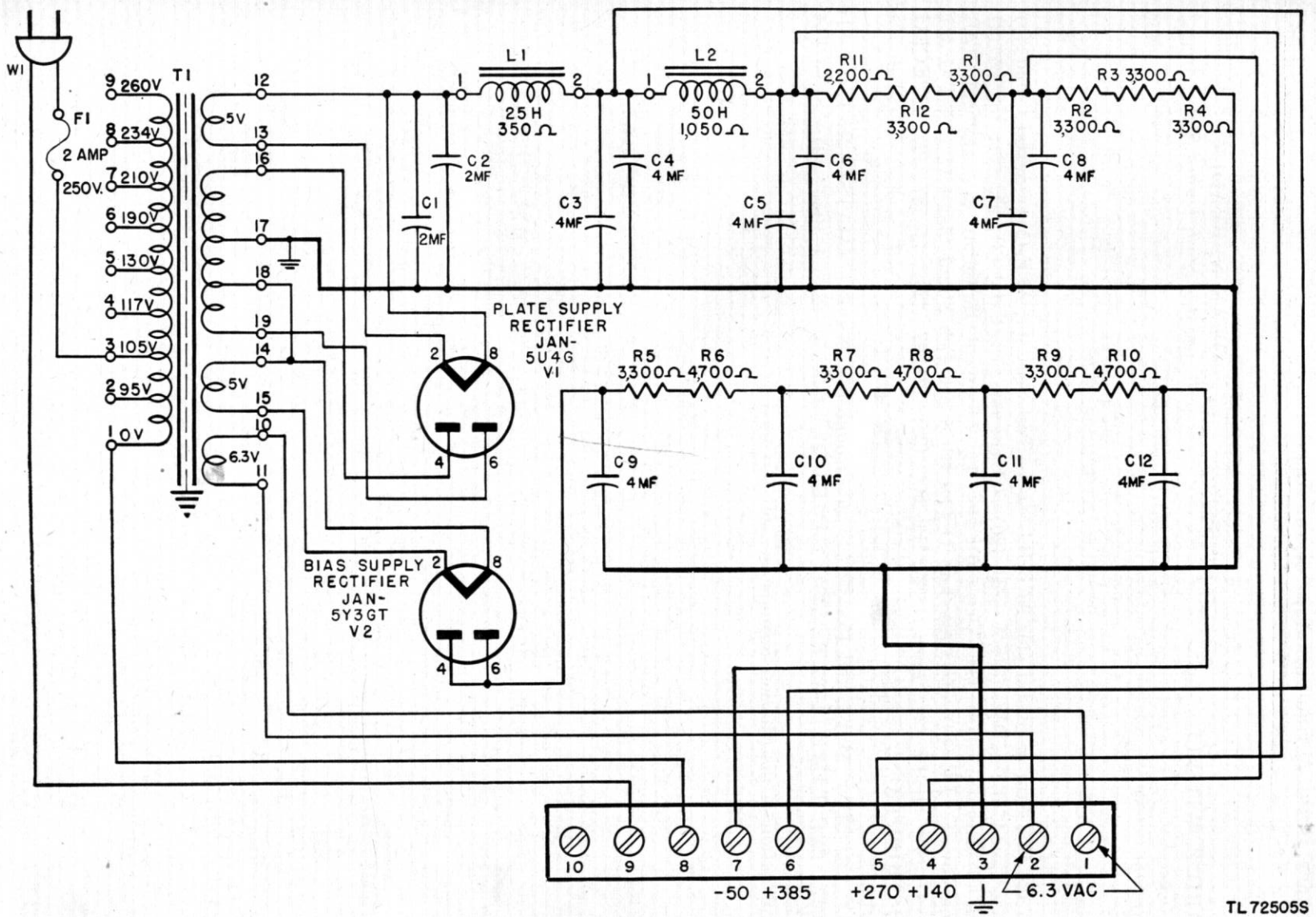

Figure 50.1 (Added.) *Power Supply Unit RA-74-D, schematic diagram.*

ManualsPlus.com

ManualsPlus.com

By order of the Acting Secretary of the Army:

Official:
EDWARD F. WITSELL
Major General
The Adjutant General

OMAR N. BRADLEY
Chief of Staff, United States Army

Distribution:

Army:

Tech Sv (2); Arm & Sv Bd (1); AFF Bd (ea Sv Test Sec) (1); AFF (5); OS Maj Comd (5); Base Comd (3); MDW (5); A (ZI) (20), (Overseas) (5); CHQ (2); FC (2); USMA (2); Sch (2) except 11 (10); Gen Dep (10); Dep 11 (5) except Baltimore & Sacramento (20); Tng Div (2); PE (10); OSD (2); Lab 11 (2); 4th & 5th Ech Maint Shops 11 (2); T/O & E 11–47 (2); 11–107 (2); 11–127 (2): 11–587 (2); 11–592 (2); 11–597 (2); SPECIAL DISTRIBUTION.

Air Force:

USAF (5); USAF Maj Comd (5); USAF Sub Comd (3); Services (MATS) (2); Class III Instls (2); T/O&E 1–452R; (2); 1–457R (2); 1–562R (2); 1–1037 (2); SPECIAL DISTRIBUTION.

For explanation of distribution formula, see SR 310–90–1.

U. S. GOVERNMENT PRINTING OFFICE: 1949