ManualsPlus.com

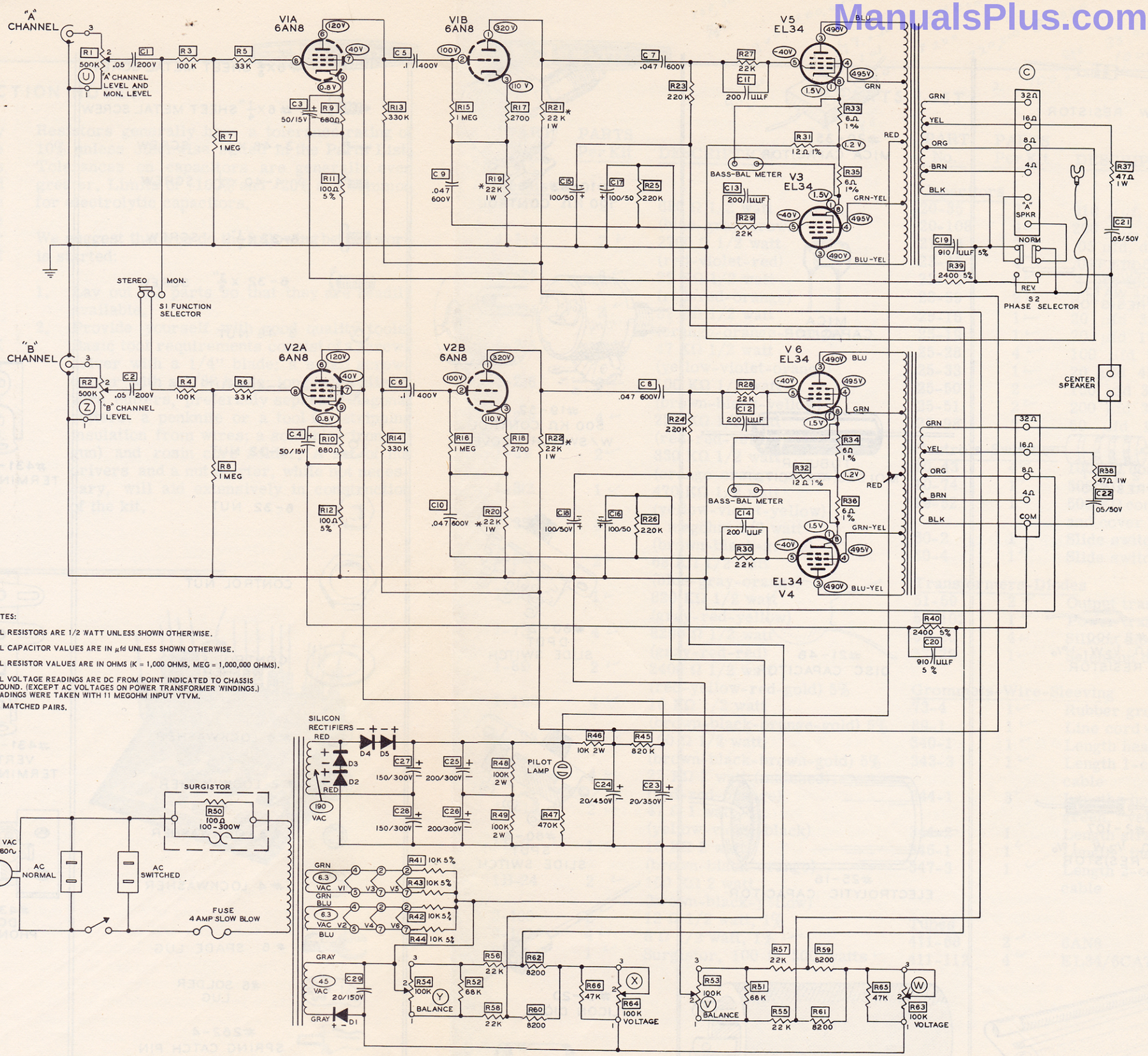

NOTES:

ALL RESISTORS ARE 1/2 WATT UNLESS SHOWN OTHERWISE.

ALL CAPACITOR VALUES ARE IN µfd UNLESS SHOWN OTHERWISE.

ALL RESISTOR VALUES ARE IN OHMS (K = 1,000 OHMS, MEG = 1,000,000 OHMS).

ALL VOLTAGE READINGS ARE DC FROM POINT INDICATED TO CHASSIS GROUND. (EXCEPT AC VOLTAGES ON POWER TRANSFORMER WINDINGS.) READINGS WERE TAKEN WITH 11 MEGOHM INPUT VTVM.

✱ 2% MATCHED PAIRS.

SCHEMATIC OF THE HEATHKIT® 80 WATT AMPLIFIER MODEL AA-121