ManualsPlus.com

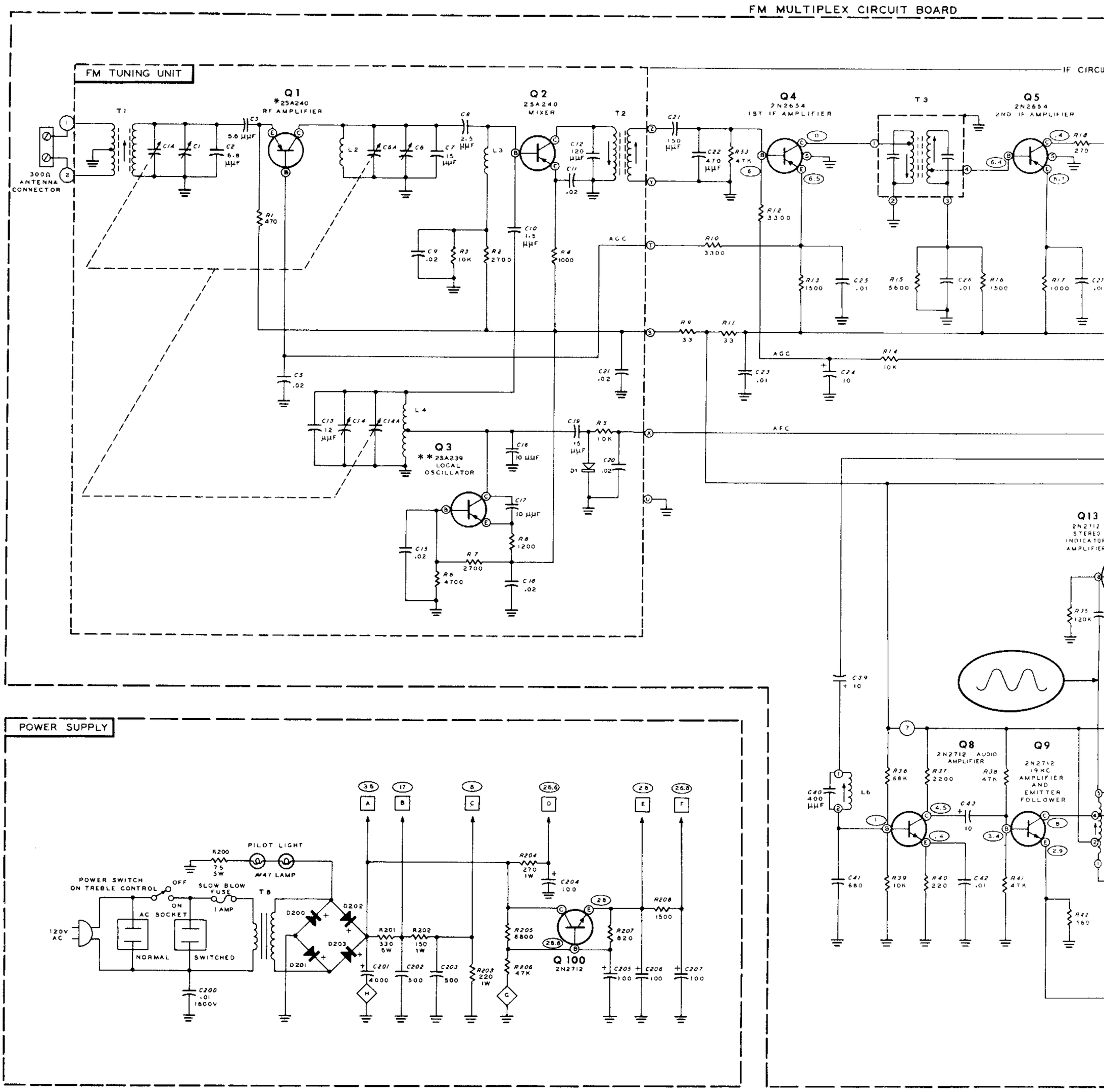

ManualsPlus.com

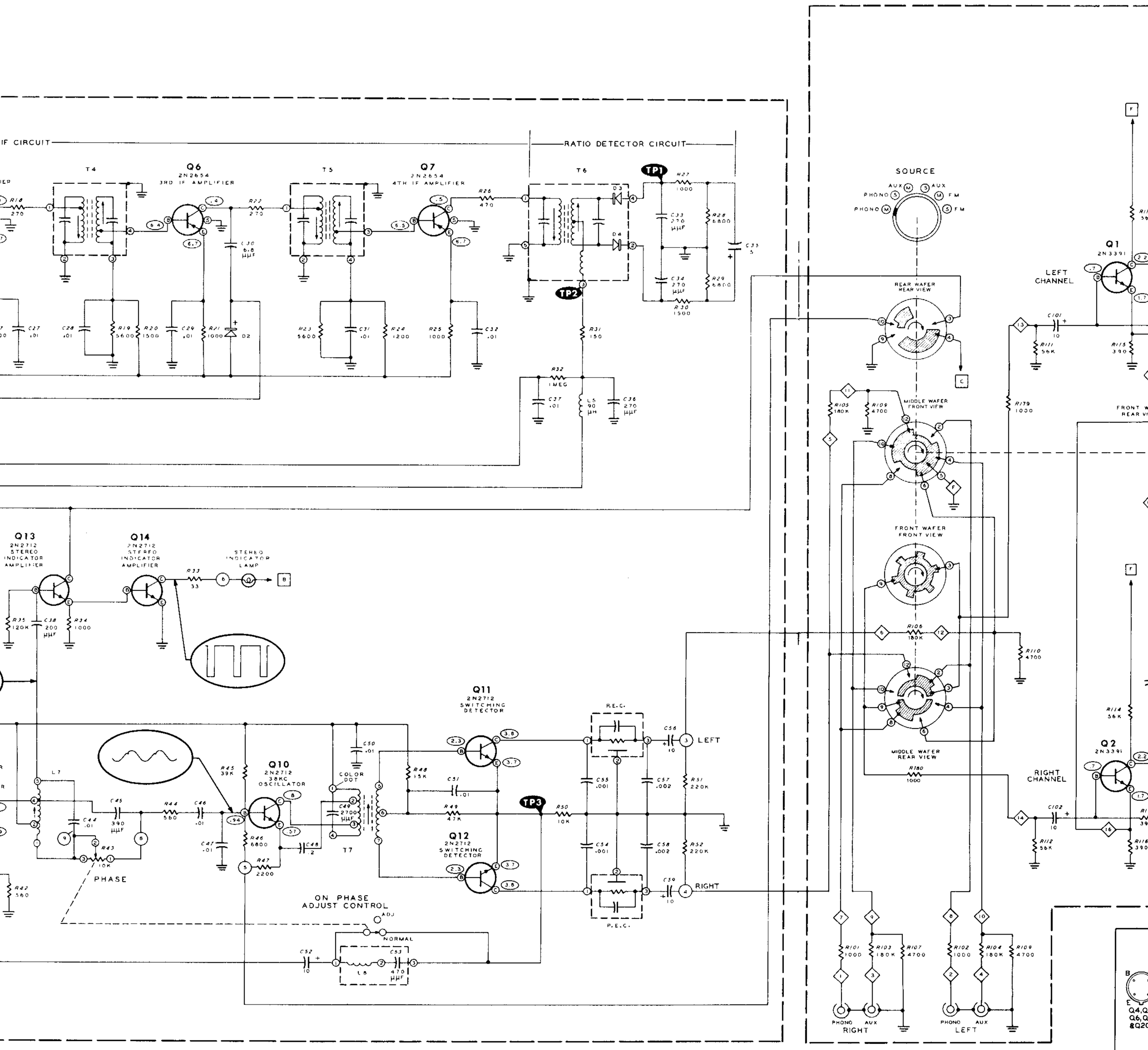

ManualsPlus.com

AMPLIFIER CIRCUIT BOARD

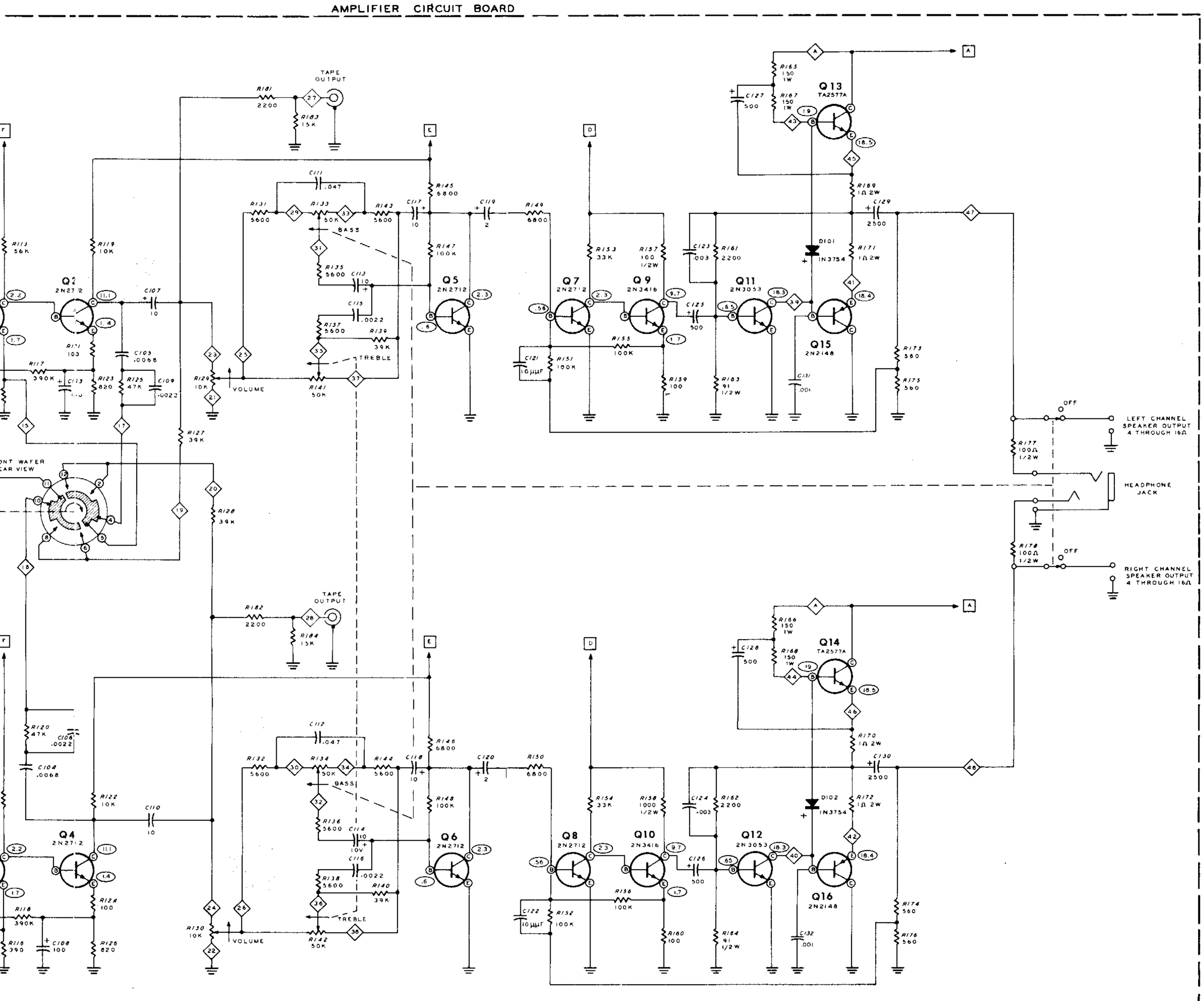

SCHEMATIC OF THE HEATHKIT® SOLID STATE FM RECEIVER MODEL AR-14

NOTES:

1. RESISTOR AND CAPACITOR NUMBERS ARE IN THE FOLLOWING GROUPS:
   - 0 - 99 NUMBERS IN THE FM TUNER SECTION.
   - 100 - 199 ODD NUMBERS INDICATE LEFT CHANNEL COMPONENTS. EVEN NUMBERS INDICATE RIGHT CHANNEL COMPONENTS.
   - 200 - 299 PARTS IN THE POWER SUPPLY.
2. ALL RESISTORS ARE 1/4 WATT UNLESS MARKED OTHERWISE. RESISTOR VALUES ARE IN OHMS : K = 1000, MEG = 1,000,000!.
3. ALL CAPACITOR VALUES ARE IN μfd UNLESS MARKED OTHERWISE.
4. ⬭ THIS SYMBOL INDICATES A POSITIVE DC VOLTAGE MEASUREMENT. TAKEN WITH AN 11 MEGOHM VTVM FROM THE POINT INDICATED TO CHASSIS GROUND. VOLTAGES MAY VARY ±20%.
5. ▢ INDICATES B+ VOLTAGE POINTS.
6. ◇ INDICATES CONNECTING POINTS ON AMPLIFIER CIRCUIT BOARD.
7. ◯ INDICATES CONNECTING POINTS ON FM TUNER CIRCUIT BOARD.
8. SOURCE SWITCH SHOWN IN FULL COUNTERCLOCKWISE POSITION AS VIEWED FROM THE FRONT.
9. REFER TO THE CIRCUIT BOARD X-RAY VIEWS FOR THE PHYSICAL LOC-TION OF PARTS.
10. INDICATES CW ROTATION.
11. MEASUREMENTS MADE WITHOUT ANTENNA CONNECTED, SWITCH S2 AT STEREO POSITION, AND PHASE SWITCH PUSHED IN.
    - TP INDICATES TEST POINTS.

* Q1 MAY BE A 2SA163 OR 2SA435 TRANSISTOR.
** Q3 MAY BE A 2SA235 TRANSISTOR.

2N2712 TRANSISTORS: Q8 THROUGH Q13 HAVE AN ORANGE DOT AND Q14 HAS A BLUE DOT.