ManualsPlus.com

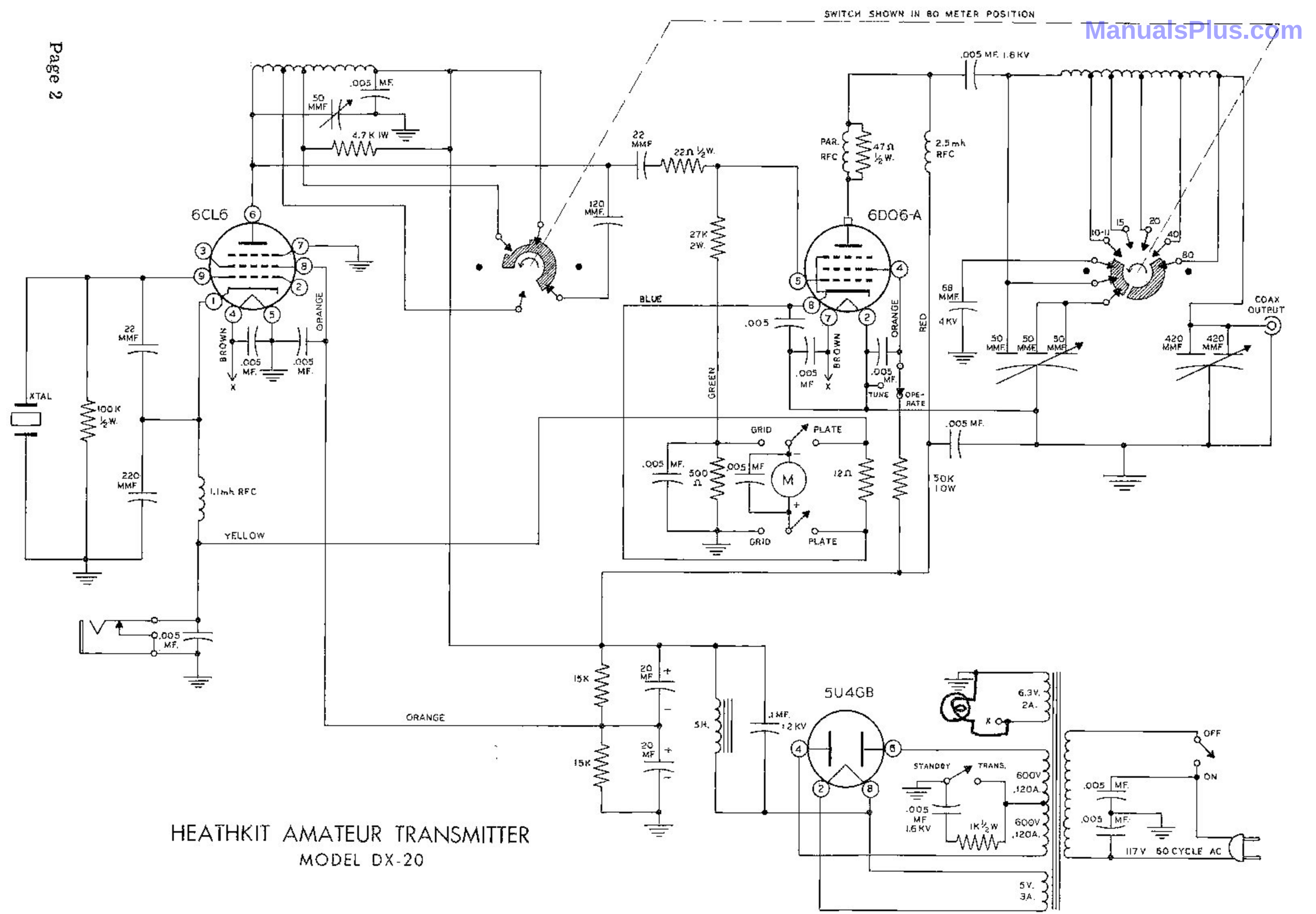

HEATHKIT AMATEUR TRANSMITTER
MODEL DX-20