ManualsPlus.com

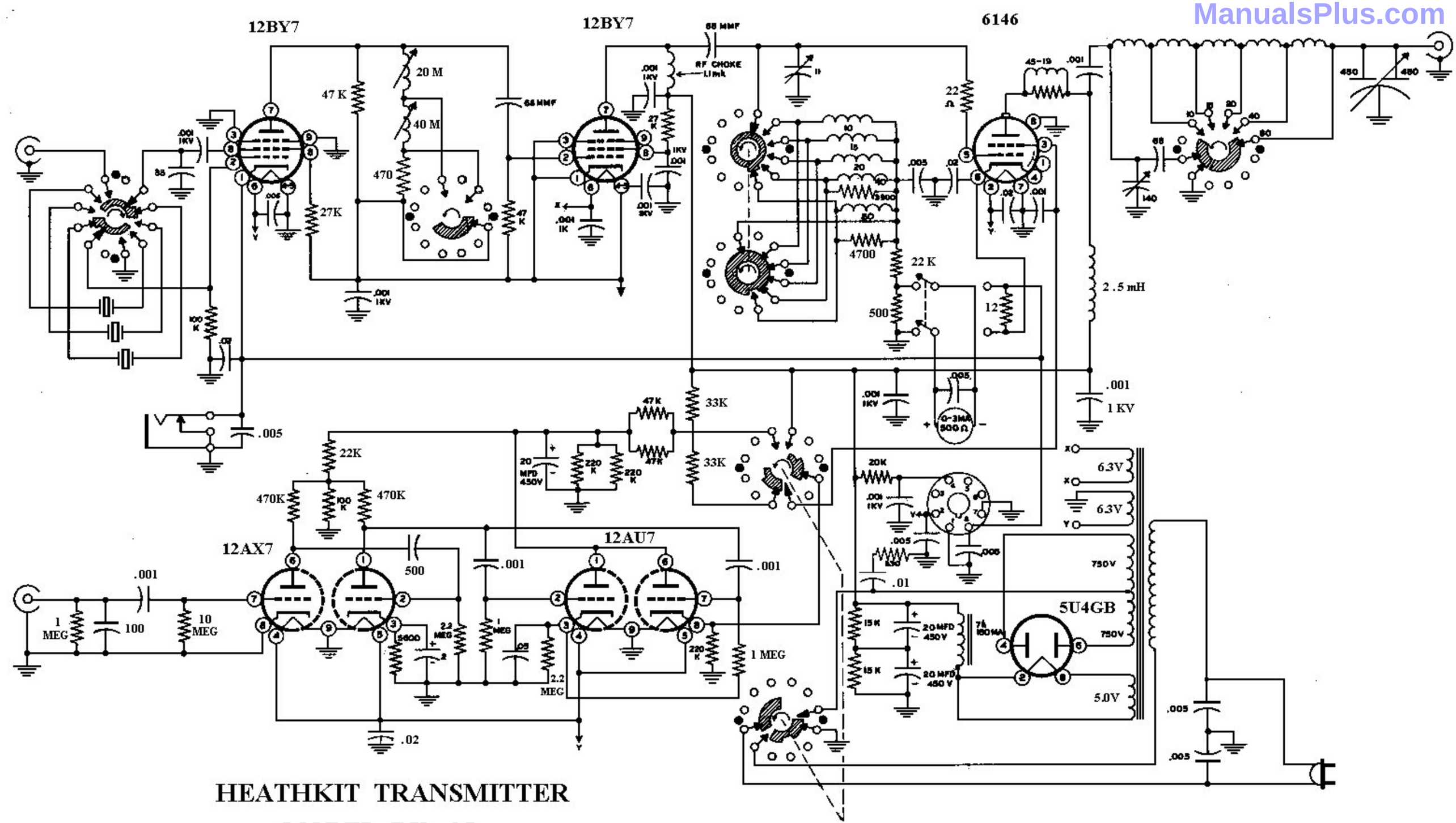

HEATHKIT TRANSMITTER

MODEL DX - 35