ManualsPlus.com

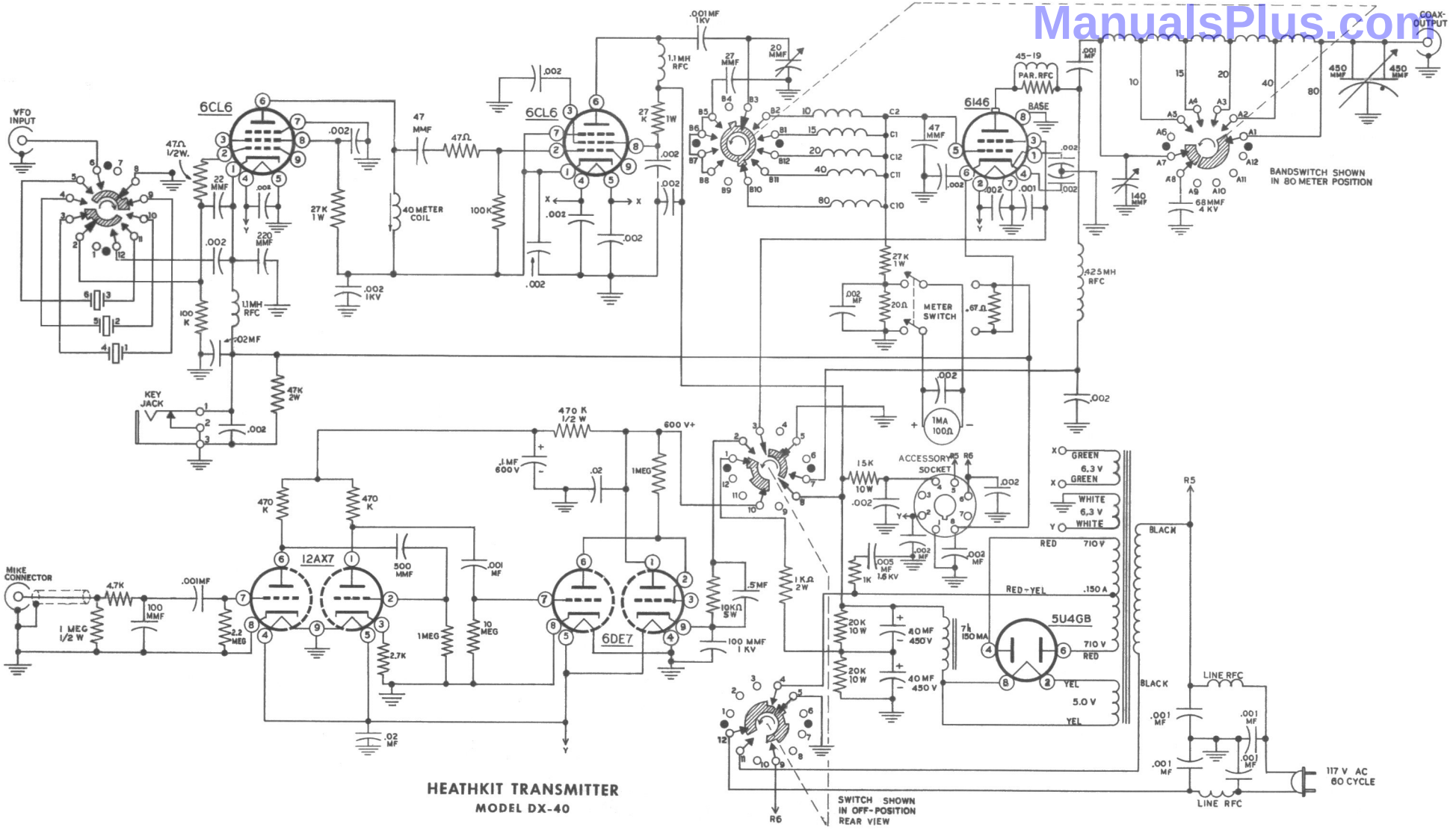

HEATHKIT TRANSMITTER

MODEL DX-40