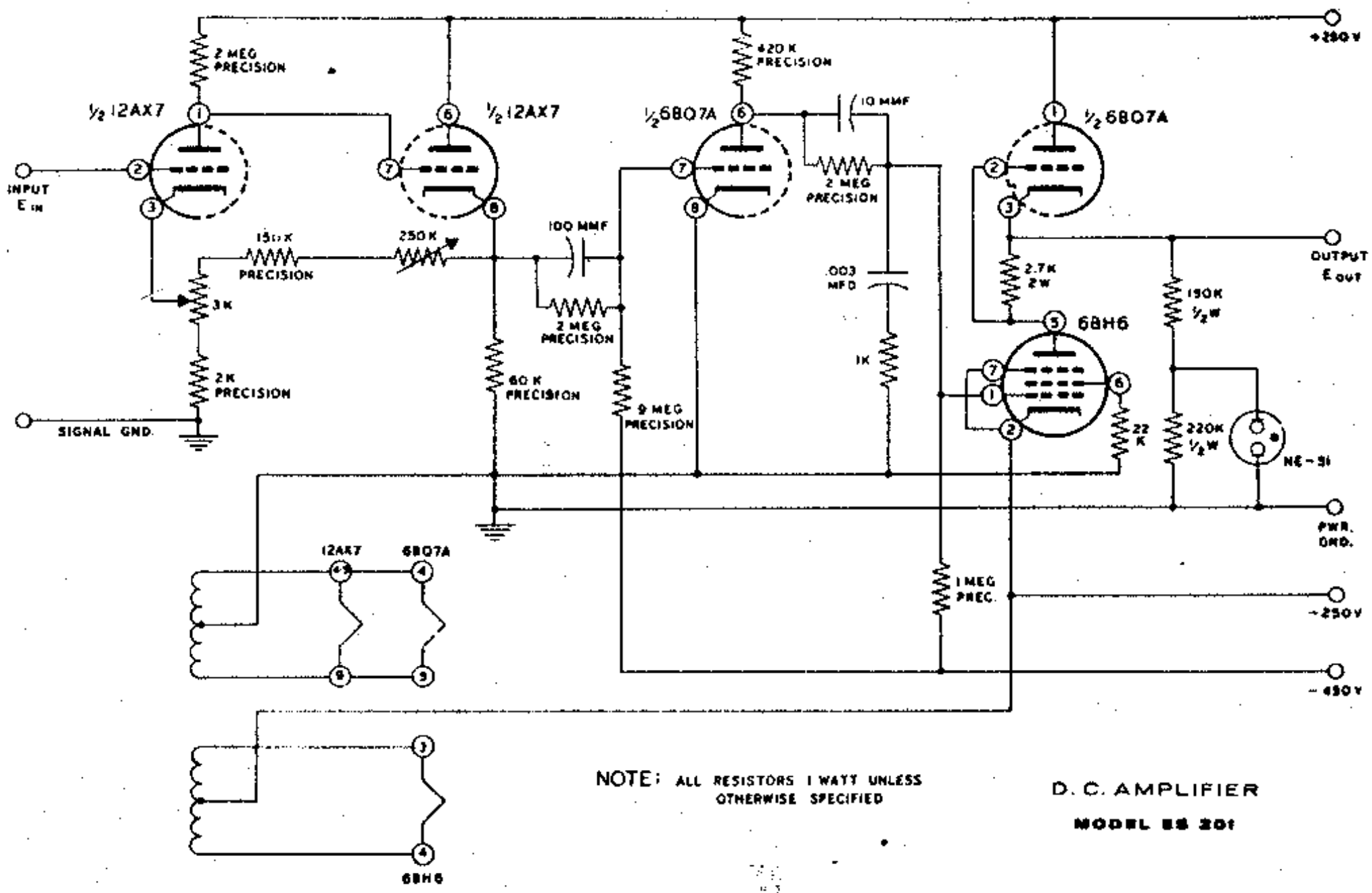

NOTE: ALL RESISTORS 1 WATT UNLESS OTHERWISE SPECIFIED

D. C. AMPLIFIER

MODEL ES 201

ManualsPlus.com