ManualsPlus.com

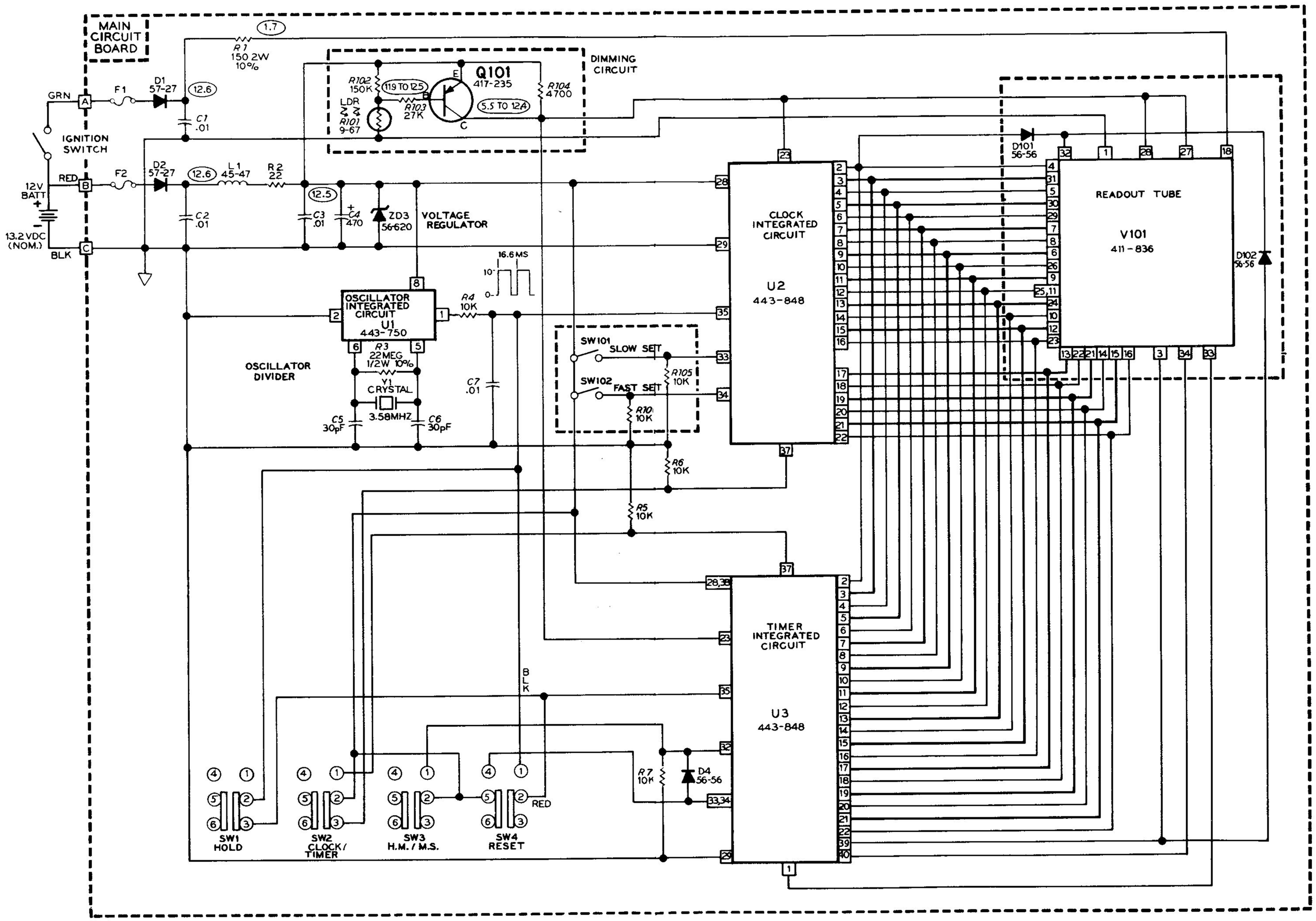

SCHEMATIC OF THE HEATHKIT® QUARTZ CLOCK/TIMER MODEL GC-1415

4. ▽ THIS SYMBOL INDICATES A CIRCUIT BOARD GROUND.
5. □ THIS SYMBOL INDICATES A CIRCUIT BOARD WIRE CONNECTION.
6. FUSES F1 AND F2 EACH ARE ONE STRAND OF 36 GAUGE WIRE.
7. ⬭ THIS SYMBOL INDICATES A DC VOLTAGE MEASURED AT 13.2 VOLTS DC INPUT, WITH A HIGH INPUT

Part of 595-2180