ManualsPlus.com

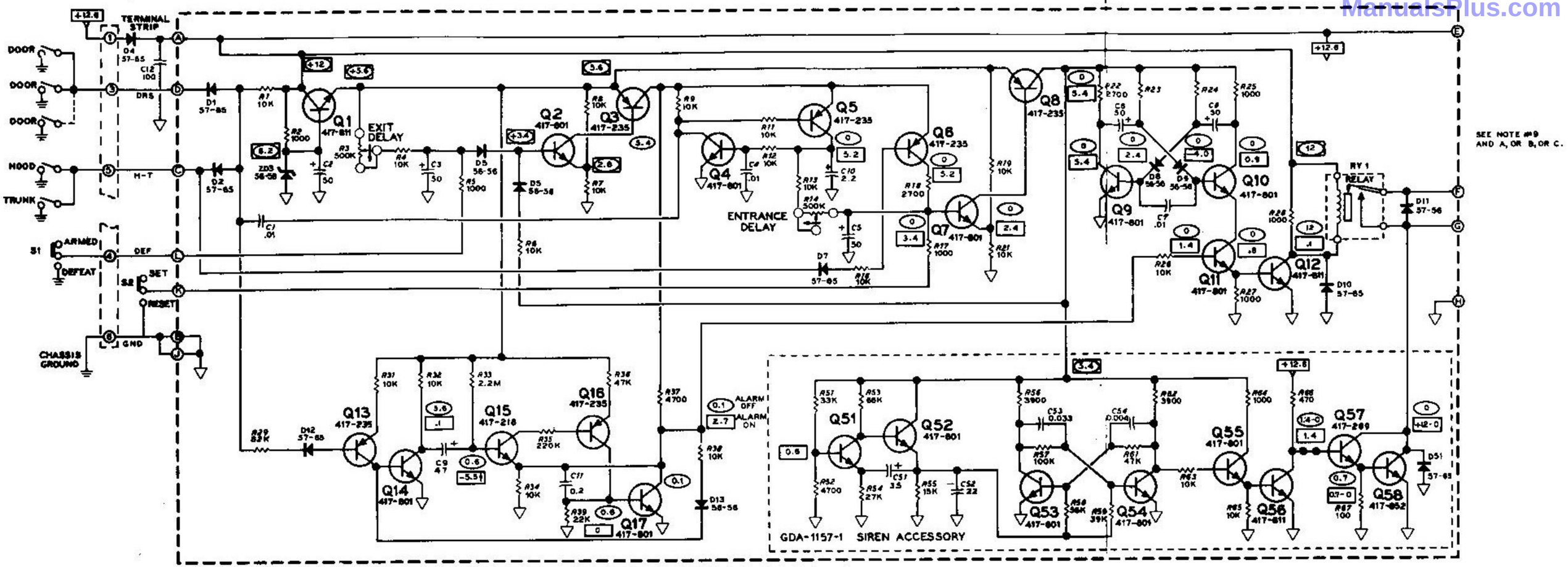

NOTES:

1. ALL RESISTORS ARE 1/2-WATT UNLESS MARKED OTHERWISE. RESISTOR VALUES ARE IN OHMS (K=1000, M=1,000,000).

2. ALL CAPACITOR VALUES LESS THAN 1 ARE IN µF. UNLESS MARKED OTHERWISE.

3. DC VOLTAGES WERE TAKEN WITH A HIGH IMPEDANCE INPUT VOLTMETER FROM THE POINT INDICATED TO THE CHASSIS GROUND. VOLTAGES MAY VARY ±20%.

4. ⬭ THIS SYMBOL INDICATES A DC VOLTAGE UNDER AN "ARMED" BUT SIREN NOT SOUNDING/ OR HORN NOT BLOWING

5. ⏚ THIS SYMBOL INDICATES CHASSIS GROUND.

6. ▭ THIS SYMBOL INDICATES A DC VOLTAGE UNDER AN "ARMED" AND SIREN SOUNDING / OR HORN BLOWING

7. ⬭ THIS SYMBOL INDICATES THE TYPE OF VOLTAGE AS IN NOTES 4 AND 6.

8. IN THE GD-1157 AUTO INTRUSION ALARM, THE VALUE OF R23 IS 22KΩ AND THE VALUE OF R24 IS 33KΩ. IN THE GDA-1157-1 SIREN ACCESSORY, THE VALUE OF R23 IS 33KΩ AND THE VALUE OF R24 IS 82KΩ.

9. WIRES J1 THROUGH J4 ARE USED AS FOLLOWS:
   #1 SEQUENCE - J1 AND J2
   #2 SEQUENCE - J3 AND J4
   GDA-1157-1 SIREN ACCESSORY - J2