ManualsPlus.com

SCHEMATIC

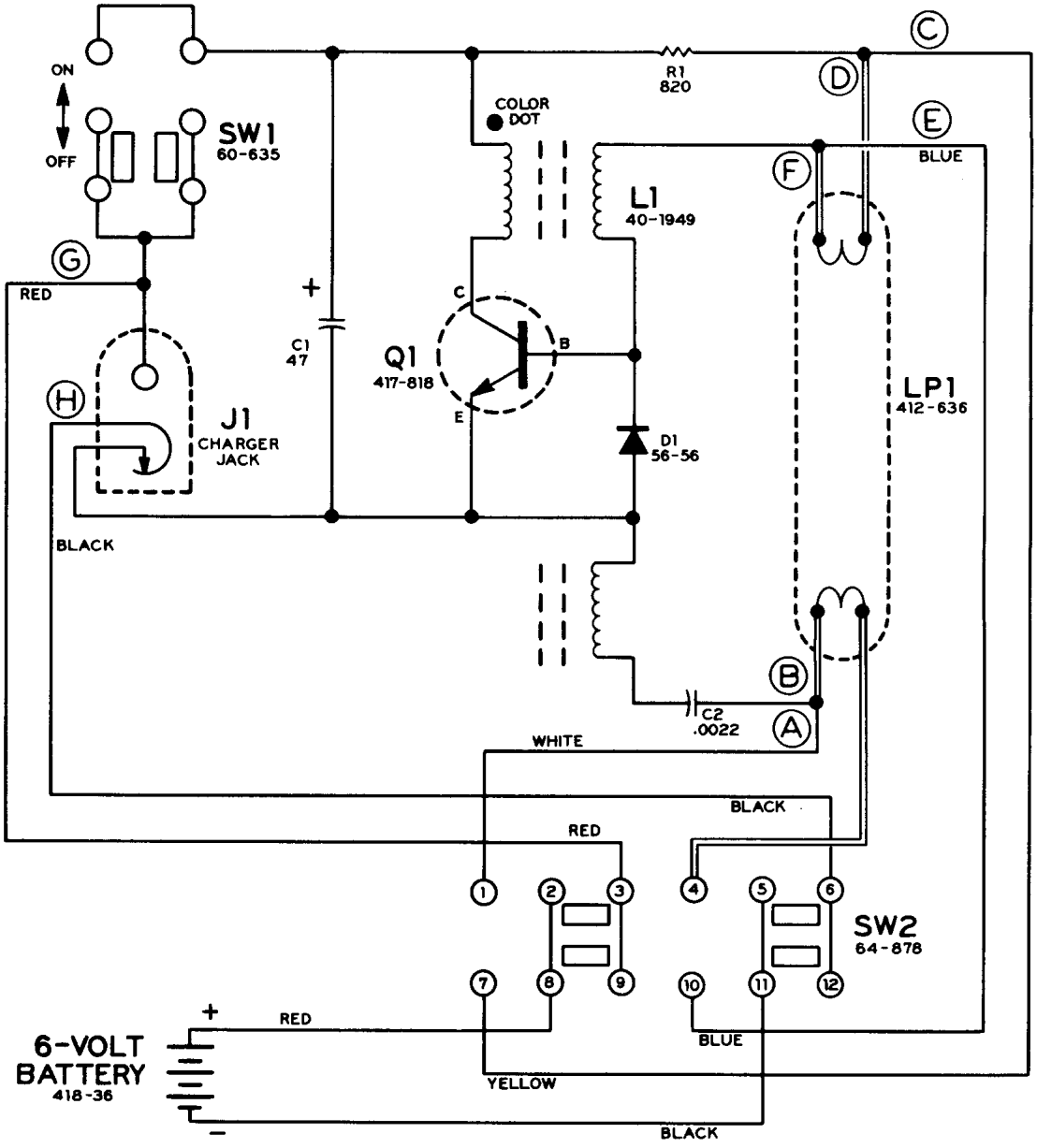

NOTES:
1. LETTERS (A) THROUGH (H) INDICATE CIRCUIT BOARD CONNECTIONS.
2. SW2 IS SHOWN IN ITS RELEASED (OUT) POSITION.