ManualsPlus.com

Assembly and Operation of the HEATHKIT

DELUXE SWL RECEIVER

MODEL GR-54

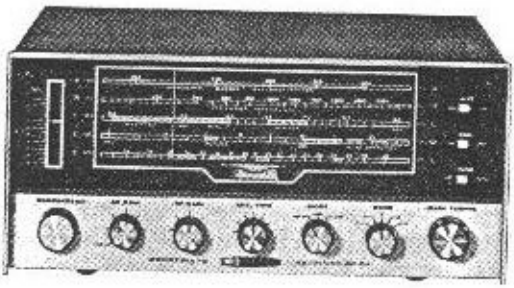

HEATH COMPANY
BENTON HARBOR,
MICHIGAN

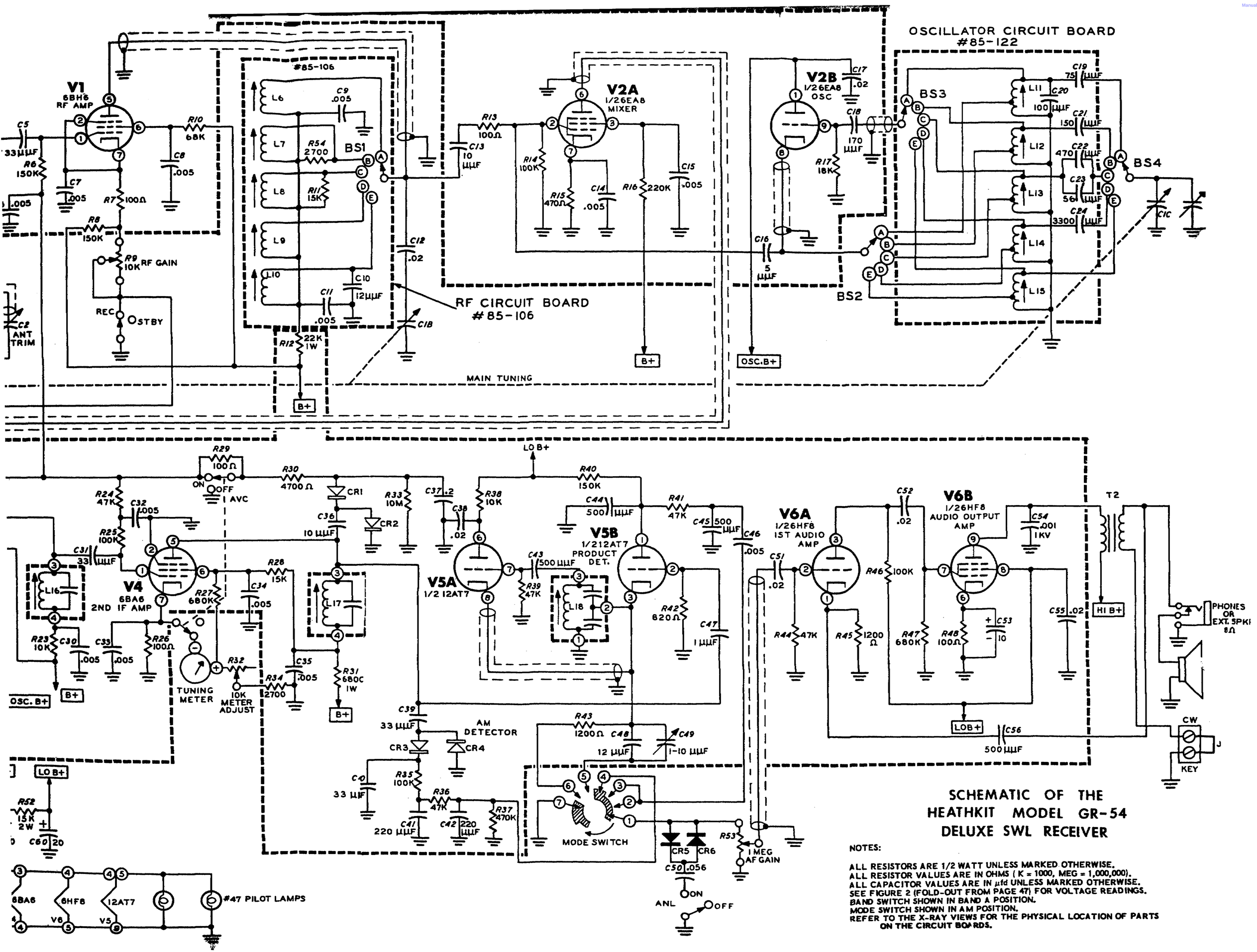

SCHEMATIC OF THE HEATHKIT MODEL GR-54 DELUXE SWL RECEIVER

NOTES:

ALL RESISTORS ARE 1/2 WATT UNLESS MARKED OTHERWISE.
ALL RESISTOR VALUES ARE IN OHMS (K = 1000, MEG = 1,000,000).
ALL CAPACITOR VALUES ARE IN µfd UNLESS MARKED OTHERWISE.
SEE FIGURE 2 (FOLD-OUT FROM PAGE 47) FOR VOLTAGE READINGS.
BAND SWITCH SHOWN IN BAND A POSITION.
MODE SWITCH SHOWN IN AM POSITION.
REFER TO THE X-RAY VIEWS FOR THE PHYSICAL LOCATION OF PARTS ON THE CIRCUIT BOARDS.

ManualsPlus.com

The coils that are adjusted in the following steps have been preset at the factory. Therefore, it should not be necessary to adjust them more than 1/2 turn in either direction. Antenna trap (#40-731) should not be adjusted.

In the following steps the IF amplifiers will be adjusted for maximum gain.

( ) Tune in any station that shows a reading of 1 or more on the tuning meter.

( ) Adjust coil L17 for a maximum meter reading.

( ) Adjust coil L16 for a maximum meter reading.

( ) Turn the MAIN TUNING for a maximum meter indication; then repeat the two preceding steps.

In the following steps, the oscillator coils of bands A, B, C, D, and E will be adjusted so the station being received is correctly indicated on the dial. Also, the RF and antenna coils are adjusted for maximum sensitivity.

( ) Turn the BAND switch to B and tune in a local station of known frequency. Turn the MAIN TUNING until the dial pointer points to the correct frequency for this station.

( ) Adjust coil #40-652 to the left or right until the correct station is heard.

( ) Tune in a station near 1000 kc. Adjust coil #40-647 for a maximum meter reading.

( ) Turn the BAND switch to A. Most stations heard on this band are aeronautical or marine navigational signals. A phone call to a local airport will disclose whether a beacon is working in the vicinity and what its frequency is.

( ) Turn the MAIN TUNING until the dial pointer points to the correct frequency for this station.

( ) Adjust coil #40-653 until this beacon station is heard at its correct dial setting.

( ) Tune in a station near 400 kc. Adjust coil #40-657 for a maximum meter reading.

( ) Tune in a station near 250 kc. Adjust coil #40-648 for a maximum meter reading.

NOTE: The United States Government operates two radio stations that give standard time and frequency signals: WWV in Washington DC, and WWVH in Hawaii. These stations transmit on the following frequencies: 2.5 mc, 5 mc, 10 mc, 15 mc, 20 mc, and 25 mc. The transmitted signals include a ticking sound (one-second time ticks), 440 cps and 600 cps audio tones, station identification in international Morse Code or by voice, and voice and Morse Code time signals.

If at all possible, WWV or WWVH signals should be used to adjust the coils on bands C, D, and E. If WWV and WWVH cannot be heard make the following adjustments at some other time of day or night when they can be heard, when band conditions are more favorable.

( ) Turn the BAND switch to C and the MAIN TUNING so the dial pointer is at 5 mc.

( ) Adjust coil #40-656 until the WWV or WWVH signal is heard.

( ) Adjust coils #40-651 and #40-660 for a maximum meter reading.

( ) Turn the BAND switch to D and the MAIN TUNING so the dial pointer is at 10 mc.

( ) Adjust coil #40-655 slowly until the WWV or WWVH signal is heard.

( ) Turn the MAIN TUNING so the dial pointer is at 5 mc, to see if the last step has effected the adjustment at this location on the dial. If WWV or WWVH is not heard, readjust coil #40-655.

( ) Tune in a station near 12.5 mc. Adjust coils #40-650 and #40-659 for a maximum meter reading.

ManualsPlus.com

INITIAL TEST

If any difficulty is encountered in the following steps, turn the Receiver off immediately and refer to the In Case Of Difficulty section of the manual.

Set the front panel controls to the following positions:

BANDSPREAD. . . . . Adjust to the SET position on the Bandspread dial.
AF GAIN . . . . . OFF.
RF GAIN . . . . . full clockwise.
ANT TRIM . . . . . full clockwise.
MODE . . . . . AM.
BAND. . . . . B.
MAIN TUNING. . . . . .1000 KC.
AVC . . . . . ON.
ANL. . . . . OFF.
OPR. . . . . REC.

( ) Plug the line cord into a 105-125 volt, 50/60 cps AC electrical outlet.

( ) Turn the Receiver on with the AF GAIN control. Both pilot lamps should light and the filaments of all six tubes should glow.

( ) Turn the AF GAIN control clockwise and listen for background noise from the speaker.

( ) If an external antenna is available, plug the lead-in from the antenna into the ANT socket. Refer to Page 50 for plug wiring. Numerous stations should be heard as the MAIN TUNING knob is turned.

( ) Unplug the antenna lead-in.

( ) Set the BAND switch to C.

( ) Make sure the AVC switch is ON and the RF GAIN control is fully clockwise.

( ) Turn the METER ADJUST control (located on the rear panel) with a screwdriver until the tuning meter (located on the front panel) reads zero.

This completes the Initial Test. If a vacuum tube voltmeter and signal generator are available, proceed to the Alignment With Instruments, on Page 43. If these instruments are not available, refer to the section of the manual titled Alignment Without Instruments.

ALIGNMENT WITHOUT INSTRUMENTS

Refer to Figure 2 (fold-out from Page 47).

The alignment of this Receiver without test instruments is accomplished by using signals of known frequencies from radio stations. For best results, an external antenna should be used. If an antenna is not already available, refer to Antenna Installation on Page 51.

If a VTVM is available, it can be used in place of the tuning meter. Set the VTVM to read -10 to -15 volts DC. Connect the common test lead to the chassis and the DC test lead to point X on the IF-audio circuit board. During alignment, refer to the VTVM reading in place of the tuning meter.

Allow the Receiver to warm up for at least 15 minutes before aligning to allow the tubes and components to stabilize.

( ) Place a piece of tape on the long end of the alignment tool, as shown in Figure 3. This alignment tool will be used to adjust the slugs inside the coils. Use the short end of the tool. The tape will show how far a slug has been turned.

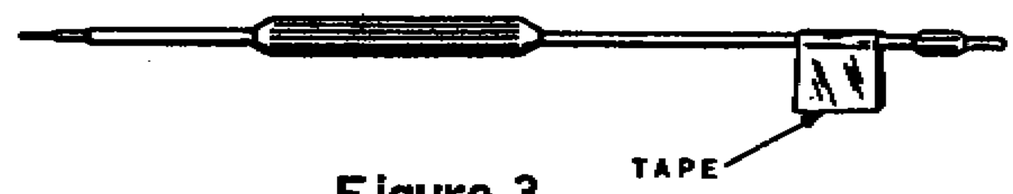

Figure 3

Set the front panel controls as follows:

BANDSPREAD . . . . . .adjust for a SET (0 position) indication on the Bandspread dial.
AF GAIN. . . . . .midposition (adjust as necessary during alignment).
RF GAIN . . . . . full clockwise.
ANT TRIM . . . . . full clockwise.
MODE. . . . . AM.
BAND. . . . . B.
AVC . . . . . ON.
ANL. . . . . OFF.
OPR. . . . . REC.
External antenna plugged in.

ManualsPlus.com

( ) Turn the BAND switch to E, and adjust the MAIN TUNING so the dial pointer is at 15 mc. NOTE: If stations WWV or WWVH cannot be found near 15 mc, tune to a signal on the Amateur Band (14.0 mc to 14.35 mc) or on the Citizens Band (26.965 mc to 27.710 mc).

( ) Adjust coil #40-654 until the correct frequency is heard.

( ) Tune in a station near 13 mc and adjust coil #40-649 for a maximum meter reading.

( ) Tune in a station near 18 mc and adjust coil #40-658 for a maximum meter reading.

BFO ADJUSTMENT

Set the Receiver front panel controls as follows:

BANDSPREAD. . . . . .adjust for a 5 indication on the Bandspread dial.
AF GAIN . . . . . adjust as necessary during alignment.
RF GAIN. . . . . full clockwise.
MODE . . . . . AM.
ANT TRIM. . . . . full clockwise.
BAND . . . . . B.
MAIN TUNING. . . . . .adjust as necessary during alignment.
AVC . . . . . ON.
ANL. . . . . OFF.
OPR . . . . . REC.

( ) Tune in a strong station that will give a meter reading above 3.

( ) Slowly adjust the Bandspread dial pointer for a maximum meter reading. Then adjust the RF Gain control for a meter reading of 3. NOTE: The meter needle will fluctuate around 3 slightly because of the varying amplitude of the voices or music being received.

( ) Now adjust the Bandspread dial pointer towards SET until a meter reading of 2.5 is obtained.

( ) Turn the MODE switch to USB. A continuous tone should be heard. If it is not heard, adjust coil L18. This coil which is located on the IF-audio circuit board should not have to be adjusted more than one turn in either direction before the tone is heard.

NOTE: In the following steps, coil L18 will be adjusted for a zero beat. Zero beat can be defined in the following way: As the coil is adjusted, the tone you hear decreases from a <u>high</u> to a gradually <u>lower</u> pitch, until no tone is heard at all. This point where no tone is heard is called the zero beat point. If you continue to adjust the coil in the same direction, the tone will gradually increase from a <u>low</u> to a <u>high</u> pitch again.

( ) Adjust coil L18 as close as possible to the zero beat point.

( ) Turn the MODE switch to AM and adjust the Bandspread dial pointer slowly towards 10 until a meter reading of 2.5 is obtained. NOTE: As the Bandspread is adjusted towards 10 the meter response is proportional to the crystal filter response. During these adjustments, the BFO is set, first on one side of the crystal filter response slope, and then on the other side. When the Mode switch is set in the LSB position, capacitors C48 and C49 are switched into the BFO circuitry to move the BFO frequency to the other side of the slope.

( ) Turn the MODE switch to LSB. A tone should be heard.

( ) Turn the threaded shaft of the 1-10 $\mu\mu f$ trimmer capacitor until zero beat is reached.

This completes the alignment of the Receiver.

ManualsPlus.com

ALIGNMENT WITH INSTRUMENTS

Set the front panel controls as follows:

BANDSPREAD. . . . . Adjust to the SET position on the Bandspread dial.
AF GAIN. . . . . .midposition (adjust as necessary during alignment).
RF GAIN. . . . . full clockwise.
ANT TRIM . . . . . full clockwise.
MODE . . . . . AM.
BAND. . . . . B.
MAIN TUNING. . . . . 1000 kc.
AVC . . . . . ON.
ANL. . . . . OFF.
OPR . . . . . REC.

Allow the Receiver to warm up for at least 15 minutes before beginning the alignment. This will allow the tubes and components to stabilize.

( ) Set the VTVM to read -DC volts on the 15 volt scale.

( ) Connect the common test lead of the VTVM to the chassis and the DC test lead to point X on the IF-audio circuit board.

( ) Connect the common lead of the signal generator to the Receiver chassis and connect the output lead to the ANT socket.

( ) Set the signal generator for a 1682 kc unmodulated signal.

( ) Adjust the signal generator for a -2 volt reading on the VTVM.

During alignment, reduce the signal generator output as the VTVM reading becomes higher, keeping near the -2 volt reading.

The coils that are adjusted in the following steps have been preset at the factory. Therefore, it should not be necessary to adjust them more than 1/2 turn in either direction. Antenna trap (#40-731) should not be adjusted.

( ) Place a piece of tape on the long end of the alignment tool, as shown in Figure 3. Use the short end of the tool for the following adjustments. The tape will indicate how far each slug is turned.

Proceed with the alignment using the Alignment Chart.

ManualsPlus.com

ALIGNMENT CHART

	SIGNAL GENERATOR FREQUENCY	RECEIVER			
		BAND	MAIN TUNING	Adjust for maximum VTVM reading. ANTENNA AND RF COILS	ADJUST FOR MAXIMUM SIGNAL OSCILLATOR COILS
1	1682 kc	B	1000 kc	L 16	NOTE: The oscillator coils will be adjusted so the station being received is correctly indicated on the dial.
2	1682 kc	B	1000 kc	L 17	
3	Repeat steps 1 and 2.				
	NOTE: For steps 4 through 17, set the signal generator for a 400 or 1000 cps AM signal.				
4	400 kc	A	400 kc		40-653
5	400 kc	A	400 kc	40-657	
6	250 kc	A	250 kc	40-648	
7	1000 kc	B	1000 kc		40-652
8	1000 kc	B	1000 kc	40-647	
9	5 mc	C	5 mc		40-656
10	5 mc	C	5 mc	40-651	
11	5 mc	C	5 mc	40-660	
12	12.5 mc	D	12.5 mc		40-655
13	12.5 mc	D	12.5 mc	40-650	
14	12.5 mc	D	12.5 mc	40-659	
15	13 mc	E	13 mc		40-654
16	13 mc	E	13 mc	40-649	
*17	13 mc	E	13 mc	40-658	

*For step 17, set the ANT TRIM knob to the 11 o'clock position.

ManualsPlus.com

BFO ADJUSTMENT

Set the Receiver front panel controls as follows:

BANDSPREAD. . . . . adjust for a 5 indication on the Bandspread dial.
AF GAIN. . . . . adjust as necessary during alignment.
RF GAIN. . . . . full clockwise.
ANT TRIM. . . . . full clockwise.
MODE . . . . . AM.
BAND . . . . . C.
MAIN TUNING . . . . . 4.5 MC.
AVC . . . . . ON.
ANL. . . . . OFF.
OPR . . . . . REC.

( ) Connect the common lead of the signal generator to the Receiver chassis and connect the output lead to the ANT socket.

( ) Set the signal generator to 4.5 MC and the modulation to 400 or 1000 cps.

( ) Carefully adjust the Receiver MAIN TUNING for a maximum meter reading.

( ) Set the signal generator output for a reading between 3 and 4 on the tuning meter.

( ) Turn the signal generator modulation off.

( ) Adjust the Bandspread dial pointer for a maximum meter reading.

( ) Reduce the signal generator output <u>or</u> the RF GAIN control for a meter reading of 3.

( ) Adjust the Bandspread dial pointer towards SET until a meter reading of 2.5 is obtained.

( ) Turn the MODE switch to USB. A continuous tone should be heard. If it is not heard, adjust coil L18 located on the IF-audio circuit board. This coil should not have to be adjusted more than one turn in either direction before the tone is heard.

NOTE: In the following steps, coil L18 will be adjusted for a zero beat. Zero beat can be defined in the following way: As the coil is adjusted, the tone you hear decreases from a <u>high</u> to a gradually lower pitch, until no tone is <u>heard</u> at all. This point where no tone is heard is called the zero beat point. If you continue to adjust the coil in the same direction, the tone will gradually increase from a <u>low</u> to a <u>high</u> pitch again.

( ) Adjust coil L18 as close as possible to the zero beat point.

( ) Turn the MODE switch to AM and adjust the Bandspread dial pointer slowly towards 10 until a meter reading of 2.5 is obtained. NOTE: As the Bandspread is adjusted towards 10, the meter response is proportional to the crystal filter response. During these adjustments, the BFO is set, first on one side of the crystal filter response slope, and then on the other side. When the Mode switch is set in the LSB position, capacitors C48 and C49 are switched into the BFO circuitry to move the BFO frequency to the other side of the slope.

( ) Turn the MODE switch to LSB. A tone should be heard.

( ) Turn the threaded shaft of the 1-10 $\mu\mu f$ trimmer capacitor until zero beat is reached.

( ) Remove the Signal Generator leads from the Receiver.

This completes the alignment of the Receiver.

NOTE: A check will now be made on each band to see if the metal bottom plate has caused the inductance of the oscillator coils to change. This change could cause a station to indicate to the left or right of its correct number on the dial.

Set the front panel controls as follows:

BANDSPREAD. . . . . adjust for a SET (0 position) indication on the Bandspread dial.
AF GAIN . . . . . midposition.
RF GAIN. . . . . full clockwise.
ANT TRIM. . . . . full clockwise.
MODE. . . . . AM.
AVC . . . . . ON.
ANL. . . . . OFF.
OPR. . . . . REC.
External antenna plugged in.

In any of the following groups of steps, if the MAIN TUNING dial pointer points to the correct frequency when a station is tuned in, no adjustment is necessary for this Band. However, if the dial pointer does not indicate the correct frequency, perform the coil adjustment under the heading for that Band. Refer to Pictorial 22 for the oscillator coil identification.

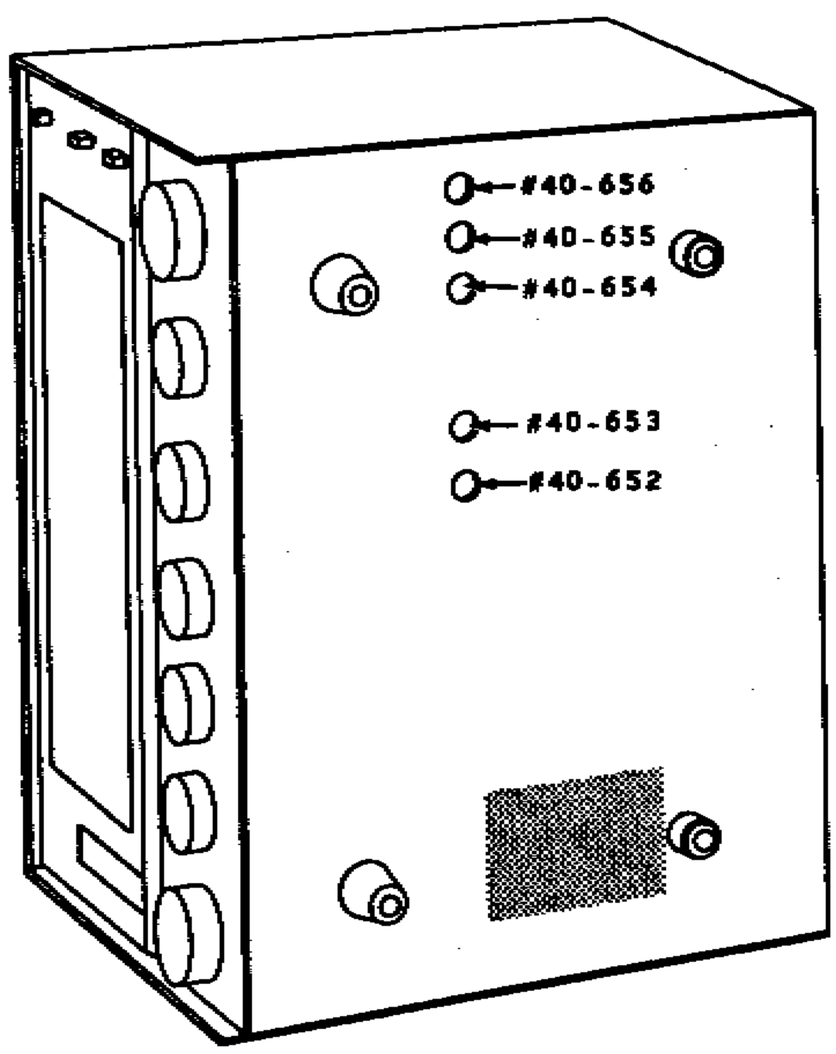

PICTORIAL 22

BAND A

( ) Turn the BAND switch to A. Most stations heard on this band are aeronautical or marine navigational signals. A phone call to a local airport will diclose whether a beacon is working in the vicinity, and its frequency.

( ) Turn the MAIN TUNING until the dial pointer points to the correct frequency for this station.

( ) Adjust coil #40-653 until this beacon station is heard at its correct dial setting.

BAND B

( ) Turn the BAND switch to B and tune in a local station of known frequency. Turn the MAIN TUNING until the dial pointer points to the correct frequency for this station.

( ) Adjust coil #40-652 to the left or right until the correct station is heard.

BAND C

( ) Turn the BAND switch to C and the MAIN TUNING so the dial pointer is at 5 mc.

( ) Adjust coil #40-656 until the WWV or WWVH signal is heard.

BAND E

( ) Turn the BAND switch to E, and adjust the MAIN TUNING so the dial pointer is at 15 mc. NOTE: If stations WWV or WWVH cannot be found near 15 mc, tune to a signal of known frequency on the Amateur Band (14.0 mc to 14.35 mc) or on the Citizens Band (26.965 mc to 27.710 mc).

( ) Adjust coil #40-654 until the correct frequency is heard.

BAND D

( ) Turn the BAND switch to D and the MAIN TUNING so the dial pointer is at 10 mc.

( ) Adjust coil #40-655 until the WWV or WWVH signal is heard.

ManualsPlus.com

( ) Turn the MAIN TUNING so the dial pointer is at 5 mc on Band D. If station WWV or WWVH is heard at 5 mc disregard the following steps. However, if the station is not heard, proceed with the following steps.

( ) Turn the MAIN TUNING slightly to the left or right of the 5 mc mark until the station is heard. Now turn the MAIN TUNING so the dial pointer is between this point and the 5 mc mark.

( ) Adjust coil #40-655 until the WWV or WWVH signal is heard. This will split up any error between the 5 mc and 10 mc dial markings.

OPERATION

Before attempting to use the Receiver, carefully read the front and rear panel explanations to learn the functions of each of the controls, switches, and connectors.

FRONT PANEL

AF Gain - Turns the Receiver on or off. Varies the loudness of the sound from the speaker or headphones by controlling the amount of audio amplifier gain.

RF Gain - Varies the loudness of the sound from the speaker or headphones by controlling the amount of RF amplifier gain. NOTE: It may be desirable to set this control toward full counterclockwise on strong LSB and USB signals for best fidelity.

Mode - Selects the following types of reception: AM (amplitude modulation), USB (upper side band), LSB (lower side band). CW (continuous wave) can be heard in either the LSB or USB position.

Band - Selects one of five frequency bands: A, B, C, D, or E.

Ant Trim - Provides a means of peaking the antenna circuit to the signal being received.

Main Tuning Tunes the Receiver to the desired station.

Bandspread - A fine tuning adjustment that is used in conjunction with the Main Tuning to help separate close-together signals on crowded frequency bands. This control is normally left in the SET position, when not in use, since it affects the main dial calibration. It will seldom be necessary to use this control on Bands A and B.

AVC - Automatic Volume Control. The AVC circuit automatically adjusts the volume level to compensate for changes in signal strength. It also reduces the effect of "blasting" when a strong signal is tuned in. Leave this switch in the ON position except when listening to very weak stations on Bands C, D, and E.

ANL - Automatic Noise Limiter. Limits static and ignition noise when in the ON position. Turn this switch to ON only when noise limiter action is desired. When a strong signal is tuned in, turn the switch to OFF to prevent distortion.

Opr - This switch has two positions; REC (receiver) and STBY (standby). For normal Receiver operation, use the REC position. To keep the Receiver warmed up and ready for instant use, switch to the STBY position.

Tuning Meter - Provides meter indication for precise signal tuning. AVC switch must be set to the ON position to allow this meter to be used. For maximum meter deflection the RF GAIN must be in the full clockwise position.

ManualsPlus.com

REAR PANEL

Meter Adj - For zeroing the tuning meter. Strength meter.

CW Key - Used for code practice only. Remove the jumper wire and connect the leads from your CW key to the terminal strip. Replace the jumper wire to restore Receiver operation.

Phones or Ext Spkr - For using an external speaker or headphones. A phone plug is provided for use with your speaker or headphone leads (see Figure 4).

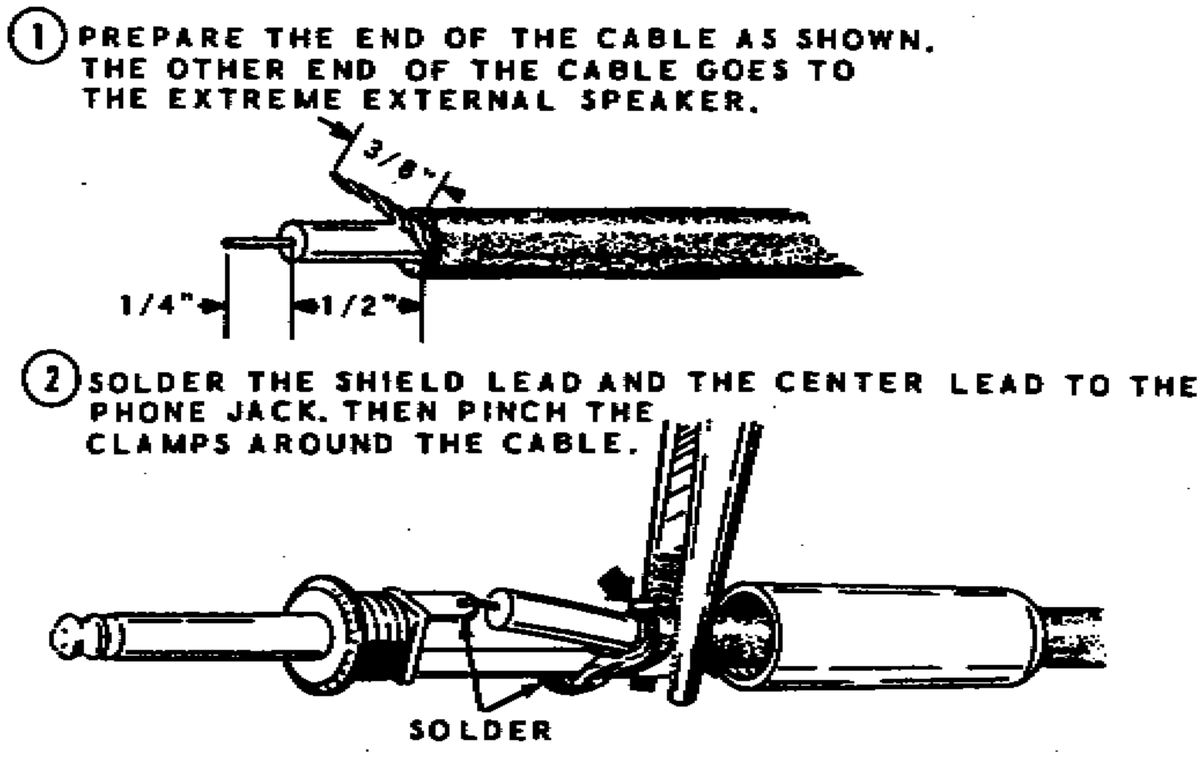

Figure 4

Ant - For connecting the external antenna that is necessary for operation on Bands A, C, D and E and better reception on Band B. A phono plug is provided for connecting to the antenna lead-in.

AM OPERATION

With the MODE switch in the AM position, stations on Bands A, B, C, D, or E can be tuned in with the Main Tuning dial. All other controls should be set as described in the Operation under Front Panel.

USB-LSB-CW OPERATION

USB (upper sideband) and LSB (lower sideband) signals are normally found at the following locations in the amateur radio bands.

USB signals are found on Band E at the following positions on the Main Tuning dial: 20 meters (14 mc to 14.35 mc), 15 meters (21 mc to 21.45 mc), 10 meters (28 mc to 29.7 mc).

LSB signals are found on Bands C and D at the following positions on the Main Tuning dial: BAND C 80 meters (3.5 mc to 4 mc), BAND D 40 meters (7 mc to 7.3 mc).

If the BANDSPREAD control is used when tuned to a USB or LSB signal, the pitch of the tone that is heard will vary as follows:

LSB: As the Bandspread dial pointer moves toward the 10 position, the pitch of the tone will gradually get lower.

USB: As the Bandspread dial pointer moves toward the 10 position, the pitch of the tone will gradually get higher.

CW (continuous wave) can be received in either the USB or LSB position.

CW-KEY OPERATION

( ) Turn the MODE switch to AM.

( ) Remove the bare wire from between the screws of the terminal strip on the rear panel.

( ) Connect a CW key to the terminal strip as shown in Figure 5. Press the key down and tune in a weak AM station.

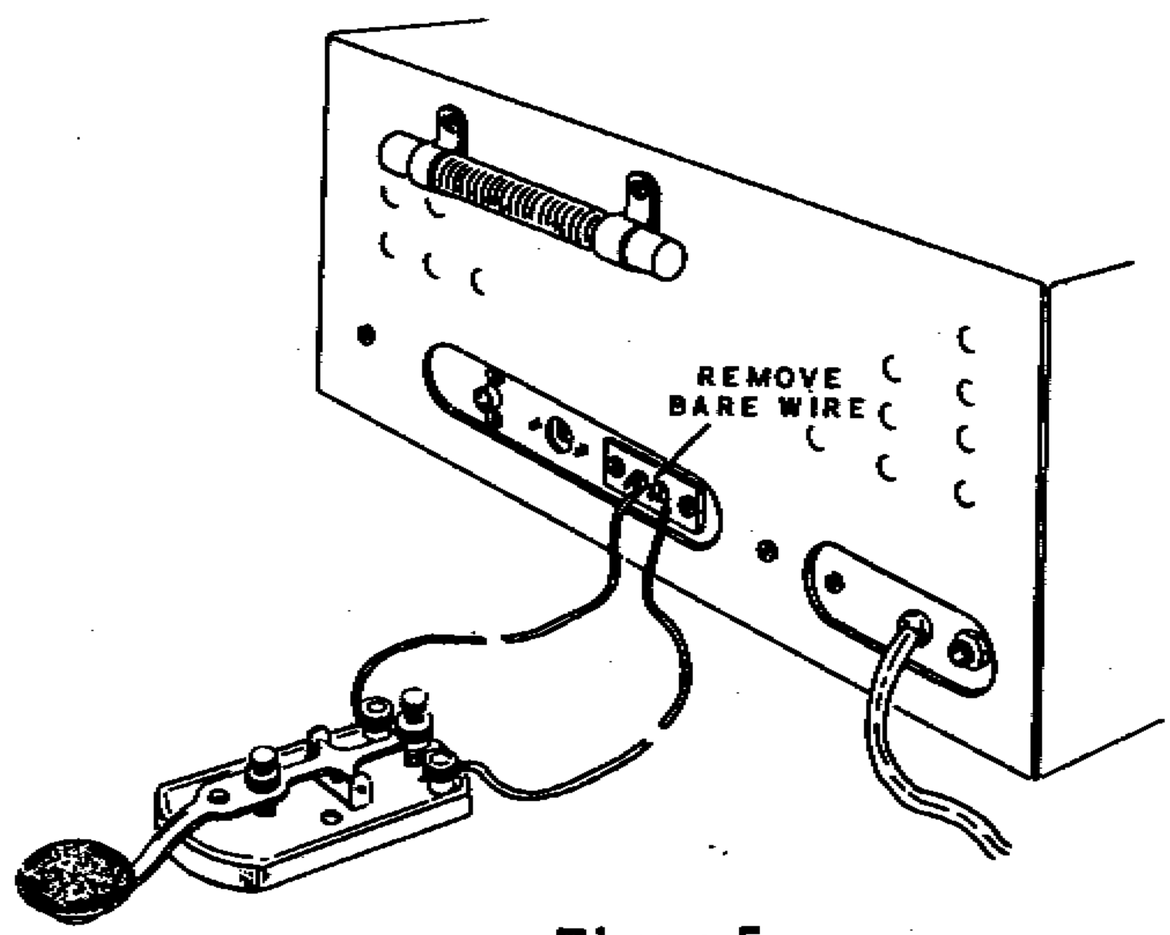

Figure 5

ManualsPlus.com

( ) Turn the MODE switch to USB or LSB.

( ) Turn the BANDSPREAD control slightly until the desired tone is heard (usually about an 800 cps tone). This tone can now be keyed for CW practice. Remember to replace the bare wire for normal Receiver operation.

ANTENNA INSTALLATION

An external antenna and a ground system are necessary for good long-wave reception on Band A and good short-wave reception on Bands C, D, and E. The antenna will also greatly improve reception on Band B, the standard broadcast band.

The following information includes three types of antennas: long-wire, dipole, and inverted-V dipole. Read the information concerning each antenna and then follow the installation instructions for the one that best suits your needs.

ANTENNA TYPES

Long-Wire - This antenna will provide good reception on the long-wave and standard broadcast bands, and fair reception on the short-wave bands.

Dipole - This is a directional antenna designed for short-wave reception. The directional feature means that signals are received best when the antenna is turned broadside to the transmitting station (when the ends of the antenna do not point toward the transmitting station).

Inverted-V Dipole - This is a non-directional antenna designed for short-wave reception. The non-directional feature means that this antenna will receive signals equally well from all directions. Therefore, it is often possible to receive more stations with this antenna than you would with the straight dipole antenna.

LONG-WIRE INSTALLATION

To install this type of antenna, refer to the Instruction Sheet (#597-178) and locate the antenna parts listed in the Parts List. Then proceed with the instructions.

ManualsPlus.com

DIPOLE OR INVERTED-V DIPOLE INSTALLATION

An antenna 100 feet long will give good reception from 3 to 15 megacycles, with the best reception being near 5 megacycles. Use the following formula if you want to compute the length of an antenna that will have its best reception at another frequency.

$$\text{length (feet)} = \frac{468}{\text{frequency (megacycles)}}$$

The following material is needed for this antenna installation:

Antenna - 50 to 100 feet of bare wire.

Lead-in - RG-58AU or RG-174U coaxial cable. The length depends upon the height of your antenna and the location of your Receiver.

Ground wire - Same type as antenna wire. The length depends upon the distance between the Receiver and the grounding surface.

Insulators - Three, ceramic or glass, 2-1/2" long.

Ground rod - One 6 or 8 foot length, 3/8" diameter. An alternate ground method is to connect the ground wire to the cold water pipe in your house.

Clamp - One for ground rod.

Lightning arrester - One for lead-in cable.

NOTE: For Dipole Installation, refer to steps 1A through 12.

For Inverted-V Dipole, refer to steps 1B through 12.

1A. Locate two supports that are fairly high from the ground and 50 to 100 feet apart. One support could be your house and the other a tree. Refer to Figure 6.

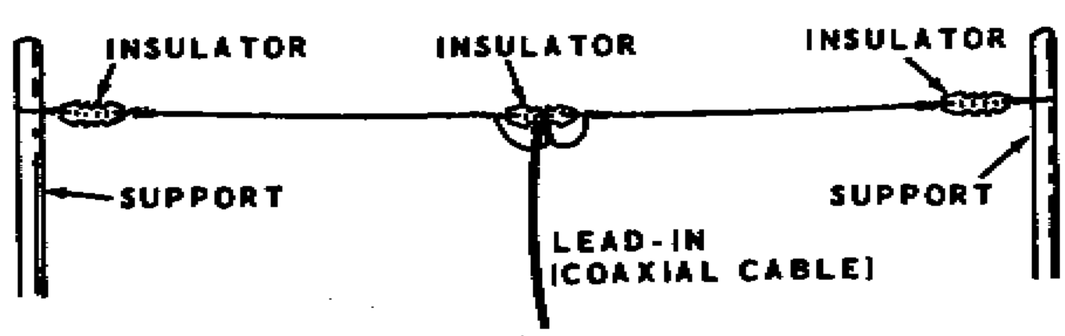

Figure 6

1B. Locate the supports that are fairly high off the ground. The center support should be 20 to 100 feet from the ground and both end supports over 10 feet from the ground. Note that the angle between the center support and the antenna wires should be over 45 degrees. Refer to Figure 7.

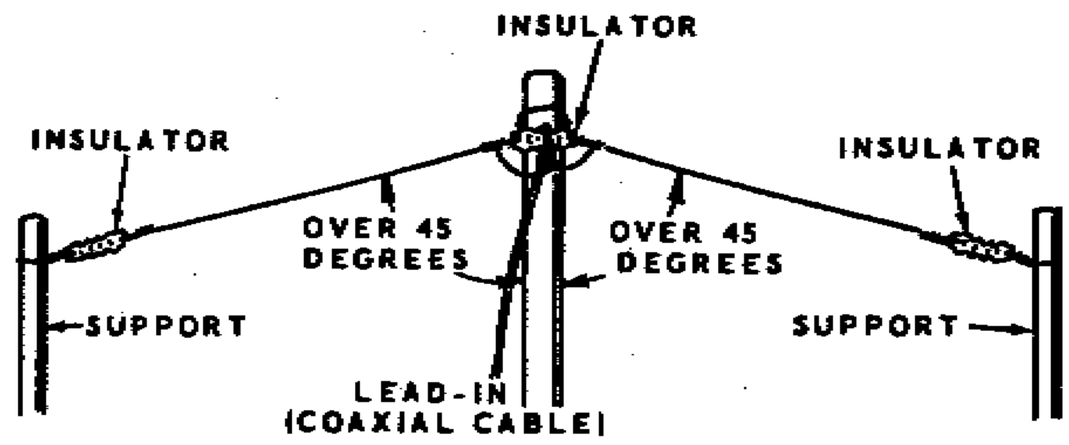

Figure 7

2. Cut the antenna wire in half. Fasten one end of one wire to an insulator. Then fasten one end of the other wire to the other end of the same insulator.

3. Fasten the remaining two insulators to the ends of the antenna wire.

4. Prepare one end of the lead-in cable so that you will have a 3" center lead and a 3" shield lead.

5. Fasten the prepared end of the cable to the center insulator (for support). Then solder the center lead of the cable to the antenna on one side of the insulator. Solder the shield to the antenna on the other side of the insulator. Refer to Figure 8.

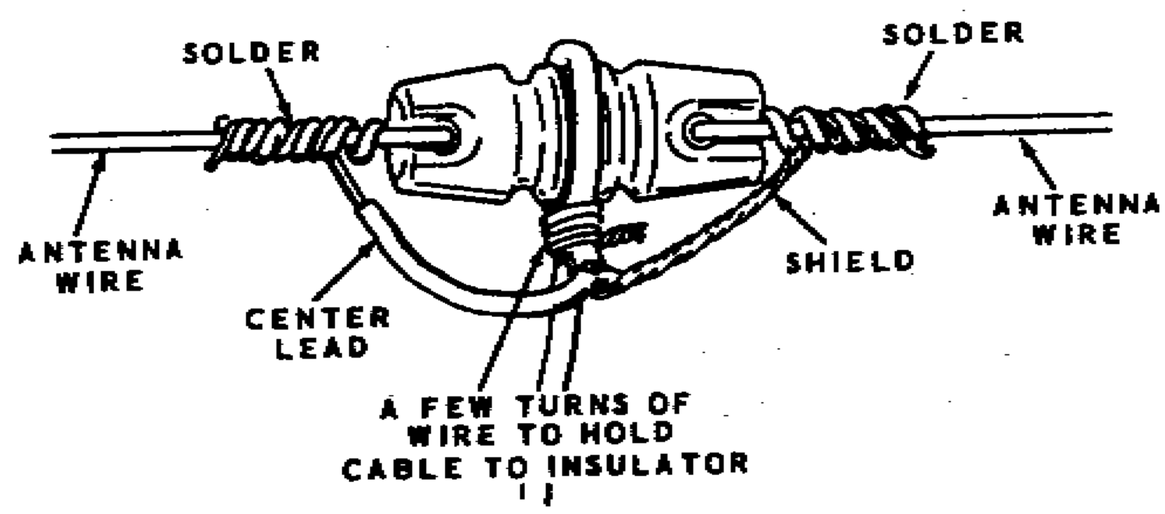

Figure 8

6. Use this step for Inverted-V Dipole only. Fasten the insulator just prepared to the center support.

7. Fasten an insulator to each end support.

8. Route the lead-in wire into the house at your Receiver location.

9. Prepare the end of the lead-in and install the phono plug as shown in Figure 9. Then plug the lead-in into the ANT socket on back of the Receiver.

10. Drive the ground rod into the ground leaving about 6" sticking up above the soil. Pick a convenient location as close as possible to the Receiver. This will enable you to keep the ground wire that will be installed in the following step, as short as possible.

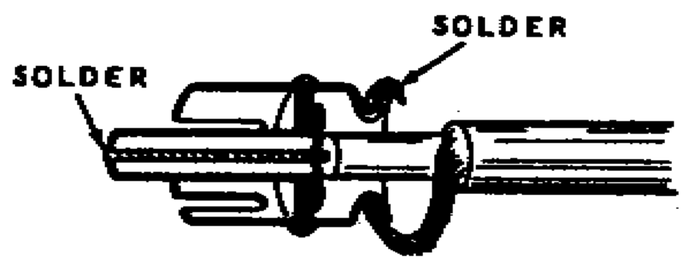

Figure 9

11. Attach a bare wire from the right hand CW-Key terminal to the clamp on the ground rod. Refer to Figure 10.

12. Follow the instructions that come with the lightning arrester and fasten it to the lead-in cable.

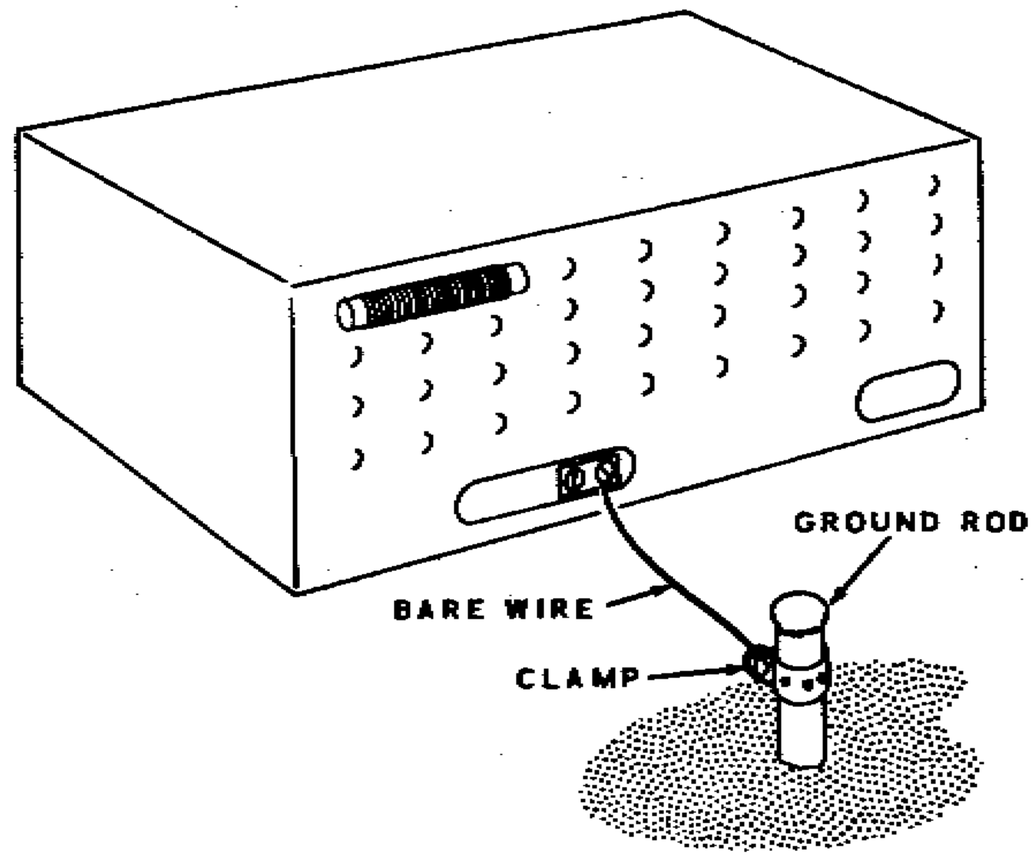

Figure 10

IN CASE OF DIFFICULTY

Refer to the Kit Builders Guide for Service and Warranty information.

1. Recheck the wiring. Trace each lead in colored pencil on the Pictorial as it is checked. It is frequently helpful to have a friend check your work. Someone who is not familiar with the unit may notice something consistently overlooked by the constructor.

2. It is interesting to note that about 90% of the kits that are returned for repair, do not function properly due to poor connections and soldering as described in the Soldering section of the Kit Builders Guide. Therefore, many troubles can be eliminated by reheating all connections to make sure that they are soldered as descrbied in the Proper Soldering Techniques section of this manual.

3. Check to be sure that all tubes are in their proper locations. Make sure that all tubes light up properly.

4. Check the tubes with a tube tester or by substitution with tubes of the same types and known to be good.

5. Check the values of the parts. Be sure that the proper part has been wired into the circuit, as shown in the pictorial diagrams and as called out in the wiring instructions.

6. Check for bits of solder, wire ends or other foreign matter which may be lodged in the wiring.

7. If, after careful checks, the trouble is still not located and a voltmeter is available, check voltage readings against those shown on the Schematic Diagram. NOTE: All voltage readings were taken with an 11 megohm input vacuum tube voltmeter. Voltages may vary as much as 10%.

8. A review of the Circuit Description will prove helpful in indicating where to look for trouble.

ManualsPlus.com

TROUBLESHOOTING CHART

DIFFICULTY	POSSIBLE CAUSE
Resistance reading from fuseholder to ground less than 15 megohms.	1. Primary winding of power transformer T3 shorted to ground.
Resistance readings less than 70 KΩ from lugs 1 through 4 of electrolytic capacitor to ground.	1. Shorted section in electrolytic capacitor; C57, C58, C59, C60, or C61. 2. Shorted B+ line (osc B+, H1 B+, B+, Lo B+) to tube plate or screen. 3. B+ bypass capacitor shorted.
Filaments do not light.	1. Filament wiring. Check the brown harness wires and green power transformer lead to the IF-audio circuit board. Also check the wiring to the pilot lamps.
Filaments light, but no sound with AF Gain turned full clockwise.	1. OPR switch not in REC position. 2. No shorting wire between lugs of CW KEY terminal strip on rear of panel of chassis. 3. Center lug of AF Gain control shorted to ground. 4. Mode switch wired wrong.
High pitched squeal with AF Gain full clockwise.	1. Capacitor C56 installed wrong. 2. Lug 2 (with one wire) of phone jack shorted. 3. Resistor R54 not connected. 4. Audio transformer (#51-55) leads reversed.
Audio hiss present, but no signals can be heard.	1. Faulty coil on bandswitch circuit board assembly. Make the following resistance checks from lug 1 of each bandswitch wafer to chassis ground. Resistance readings may vary ±10% from the charted values.

BANDSWITCH WAFERS (Lug 1)	BANDSWITCH SETTINGS				
	A	B	C	D	E
BS2	.5 Ω	.4 Ω	.2 Ω	0 Ω	0 Ω
BS3	2.0 Ω	2.0 Ω	.2 Ω	.1 Ω	.05 Ω
BS4	INF	INF	INF	INF	
BS5	8 Ω	50 Ω	.1 Ω	.05 Ω	0 Ω
BS6	12 Ω	.4 Ω	1.0 Ω	.1 Ω	0 Ω

2. Faulty component or wiring in circuit of tubes V1, V2, V3, and V4. Check voltages at the lugs of these tubes. Voltage readings may vary ±20% of the values shown on the Voltage Chart.
3. Antenna trim capacitor C2 shorted to ground.

ManualsPlus.com

DIFFICULTY	POSSIBLE CAUSE
Distortion on strong AM signals.	1. AVC switch turned off. 2. ANL switch turned on. 3. Faulty AVC diodes CR1 or CR2. 4. Received signal is distorted. 5. Detector diodes CR3 and CR4 faulty or installed backwards.
Distortion on strong SSB or CW signals.	1. AVC switch turned off. 2. RF Gain control turned too far clockwise. 3. Faulty AVC diodes CR1 or CR2.
Single sideband signals sound low or high pitched.	1. Signals are not tuned in properly with Band-spread control. 2. BFO coil L18 and/or trimmer capacitor C49 not adjusted correctly.
A loud howl from speaker on strong signals, especially on Bands D and E.	1. Tuning capacitor mounting plate fastened too tight. 2. Flat braid between lugs of capacitor mounting plate not flexible.
Tuning meter inoperative.	1. Shorting wire not removed from tuning meter lugs. 2. AVC switch in off position, or wired wrong. 3. Meter faulty.

ManualsPlus.com

SPECIFICATIONS

Frequency Coverage.	Band A: 180 kc to 420 kc. Band B: 550 kc to 1550 kc. Band C: 2 mc to 5 mc. Band D: 5 mc to 12.5 mc. Band E: 12.5 mc to 30 mc.
Meter.	Indicates Relative Signal Strength.

	LOW END	HIGH END
Image Rejection.	Band A: 95 db or more	80 db or more.
	Band B: 60 db or more	25 db or more.
	Band C: 50 db or more	45 db or more.
	Band D: 50 db or more	35 db or more.
	Band E: 45 db or more	15 db or more.

Intermediate Frequency (IF).	1682 kc.
Selectivity.	3.0 kc minimum at 6 db. 7.5 kc maximum at 20 db.

	AM	SSB/CW
Sensitivity* (average).	Band A 1.6 μv	0.7 μv
	Band B 8 μv	-
	Band C 1 μv	0.4 μv
	Band D 1.2 μv	0.5 μv
	Band E 6 μv	4 μv

Tube Complement.	6BH6, RF amplifier. 6EA8, oscillator and mixer. 2 - 6BA6, IF amplifier. 12AT7, BFO and product detector. 6HF8, audio preamplifier and power amplifier.
Diode Complement.	2 - AVC rectifier. 2 - AM detector. 2 - ANL (automatic noise limiter). 2 - Power supply rectifier.
Power Requirements.	120 volts, 50/60 cps AC, 45 watts.

*Signal level for 10 db $\frac{\text{signal + noise}}{\text{noise}}$ ratio.

ManualsPlus.com

Controls.	Bandspread. AF Gain, with OFF-ON switch. RF Gain. ANT Trim. Mode, with AM, USB and LSB positions. Band, with A, B, C,D, and E positions. Main Tuning. AVC (automatic volume control). ANL (automatic noise limiter). OPR, with REC and STDBY positions. Meter Adjust on rear panel.
Rear Panel Connectors.	ANT. CW Key. Phones or EXT Spkr.
Antenna Input Impedance.	30 Ω to 75 Ω.
Audio Output Impedance.	8 Ω.
Dimensions.	14-5/8" wide x 6-5/16" high x 10-15/16" deep.
Net Weight.	18.6 lbs.

All prices are subject to change without notice. The Heath Company reserves the right to discontinue instruments and to change specifications at any time without incurring any obligations to incorporate new features in instruments previously sold.

CIRCUIT DESCRIPTION

Refer to the Schematic (fold-out from Page 63) and to the Block Diagram (fold-out from Page 48) while reading the following description. All circuits will be described with the Mode and Band switches in their fully counterclockwise positions, as they are shown on the Schematic.

The RF signals received by the antenna are coupled to the primary winding of coil L1. The secondary winding of coil L1 and Main Tuning capacitor C1A select a station frequency. This signal is coupled through capacitor C5 to the control grid of RF amplifier tube V1.

The output signal from the plate of tube V1 is tuned by capacitor C1B and coil L6. This signal is then coupled through capacitor C13 to the control grid of mixer tube V2.

Tube V2 has two sections: a mixer, V2A; and an oscillator, V2B. The oscillator frequency is determined by capacitor C1C and coil L11. The signal from the oscillator is coupled through capacitor C16 to the control grid of mixer tube V2A. The incoming signal and the oscillator signal are heterodyned (mixed) in tube V2A, resulting in an IF frequency.

The IF signal, along with the other unwanted signals are coupled from the plate of V2A to IF transformer T1. This transformer selects only the IF signal and couples it to the crystal filter.

A half-lattice crystal filter is used in the secondary winding of transformer T1. This crystal filter provides a narrow IF bandpass that

ManualsPlus.com

suppresses unwanted adjacent signals and makes the Receiver more selective.

The signal from the crystal filter is fed to the control grid of the first IF amplifier tube V3. The amplified signal from V3 is coupled through capacitor C31 to the control grid of the second IF amplifier tube, V4.

From the plate of tube V4 the IF signal is coupled through capacitor C39 to the AM detector. Crystal diodes CR3 and CR4 detect the audio modulation from the IF signal.

AVC AND ANL CIRCUITS

With the AVC (automatic volume control) switch turned on, some of the signal from the plate of tube V4 is rectified by crystal diodes CR1 and CR2. This DC voltage, which increases or decreases with the input signal level, is fed back to the control grid of tubes V1, V3, and V4. This AVC voltage controls the amount of amplification of these tubes, providing a more constant signal level at the speaker.

With the ANL (automatic noise limiter) switch turned on, diodes CR5 and CR6 are connected into the circuit. These diodes, which limit the peaks of the AF signal, clip off the noise pulses such as static and ignition noise, that are often present on the signal.

PRODUCT DETECTOR AND BFO

The signal from the plate of second IF amplifier tube V4 is coupled through capacitor C47 to the grid of product detector tube V5B. For a USB signal, the Mode switch is placed in the USB position. This turns on product dectector stage V5B and BFO (beat frequency oscillator) stage V5A. The BFO is tuned by coil L18 to the carrier frequency necessary for proper SSB (single sideband) or CW detection. For an LSB signal the Mode switch is placed in the LSB position. The BFO is then tuned to a lower frequency by capacitors C48 and C49.

Product detector tube V5B mixes the single sideband or CW and BFO signals. The output at the plate of V5B is an audio signal.

AUDIO CIRCUITS

The audio signal from the AM detector or product detector is coupled through resistor R53 and capacitor C51 to the control grid of first audio amplifier tube V6A. V6A amplifies the signal and then couples it through capacitor C52 to the control grid of audio output tube V6B. The signal is amplified by tube V6B and then coupled through audio output transformer T2 to the speaker or headphones. Capacitor C56 provides high frequency feedback for distortion cancellation, and stability.

POWER SUPPLY

The power supply is a full-wave rectifier, consisting of diodes CR7 and CR8, and power transformer T3. The DC voltage is filtered by resistors R49, R50, R51, and R52 and capacitors C57, C58, C59, C60, and C61.

ManualsPlus.com

CIRCUIT BOARD X-RAY Views (cont'd.)
(Viewed From Foil Side)

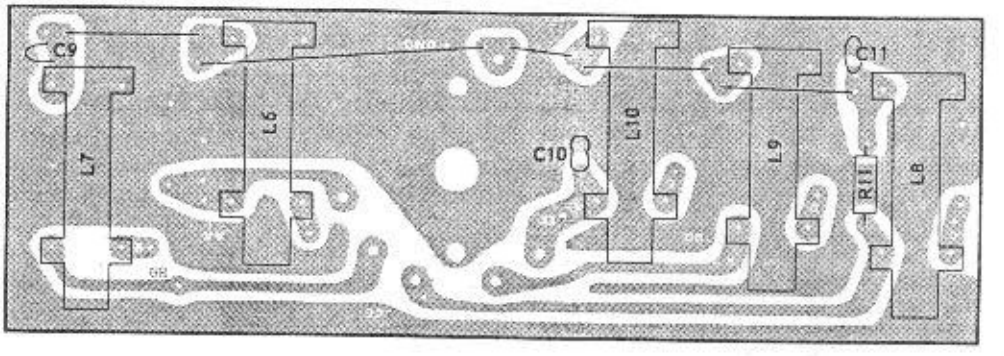

RF CIRCUIT BOARD

#85-106

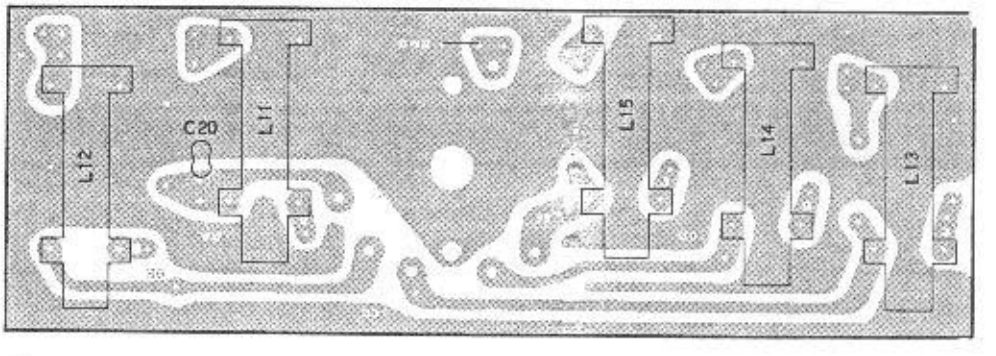

OSCILLATOR CIRCUIT BOARD

#85-122

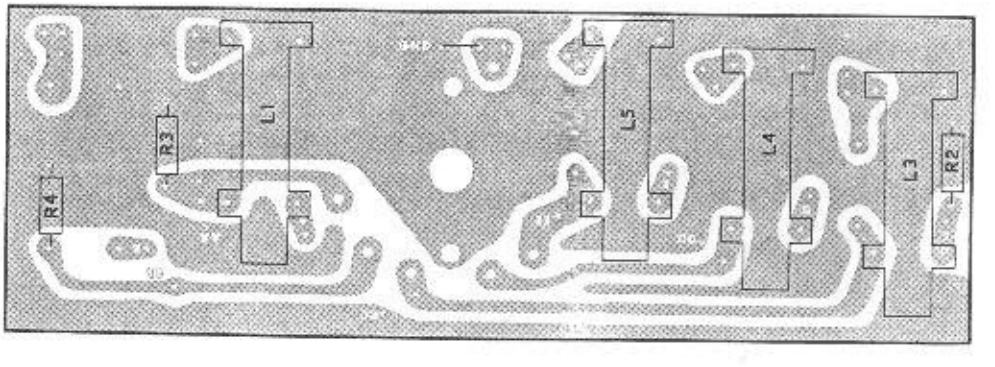

ANTENNA CIRCUIT BOARD

#85-123

ManualsPlus.com

CIRCUIT BOARD X-RAY VIEWS

(VIEWED FROM FOIL SIDE)

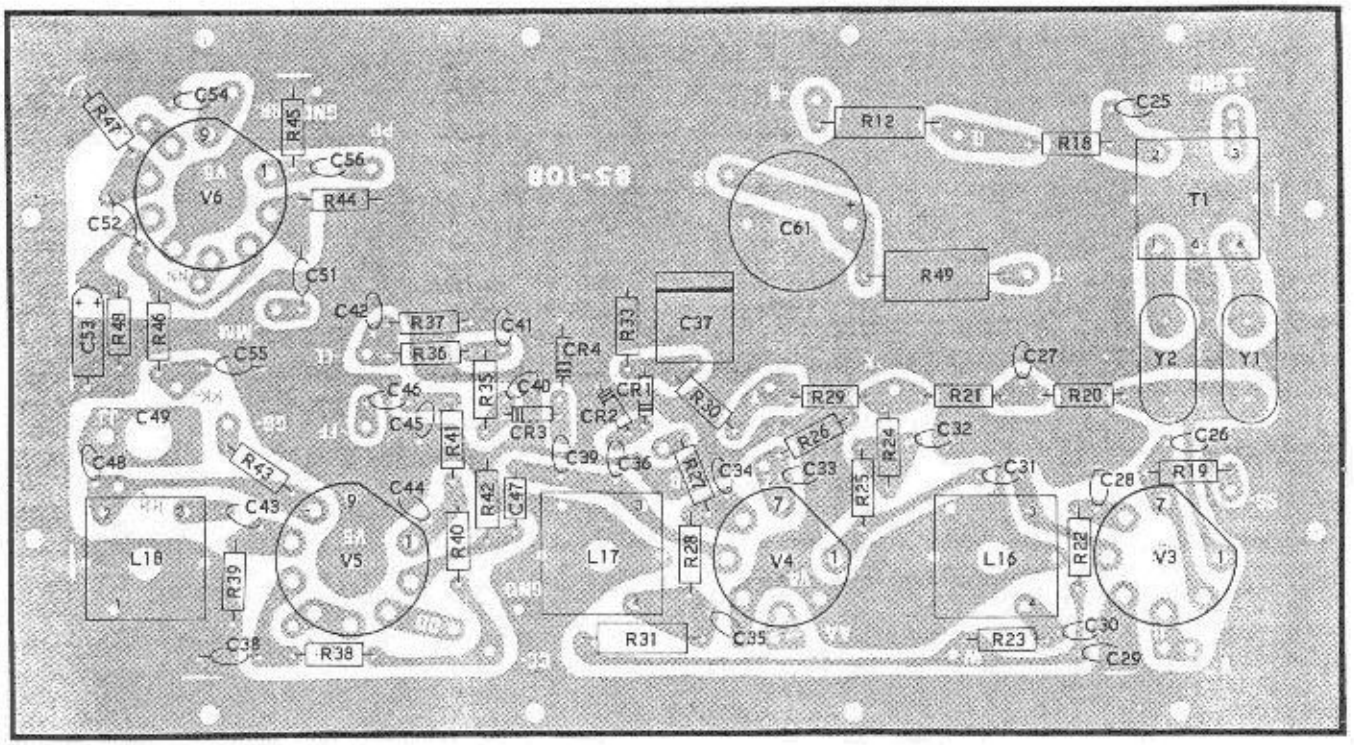

IF-AUDIO CIRCUIT BOARD

#85-108P150

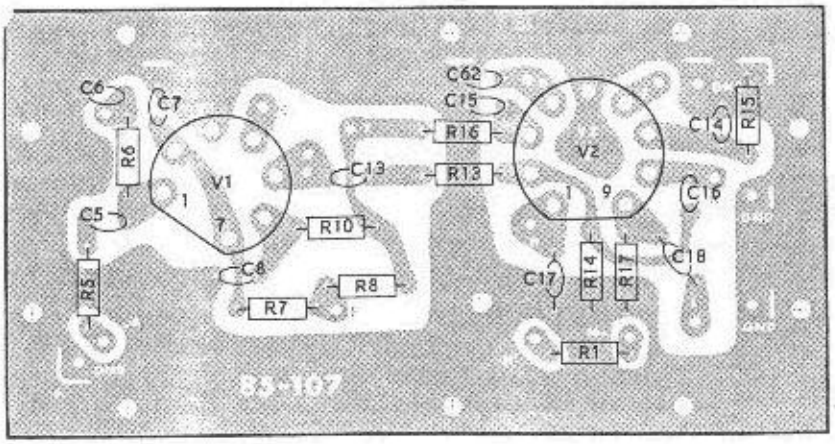

RF-OSCILLATOR-MIXER CIRCUIT BOARD

#85-107P149

ManualsPlus.com

CHASSIS PHOTOGRAPHS

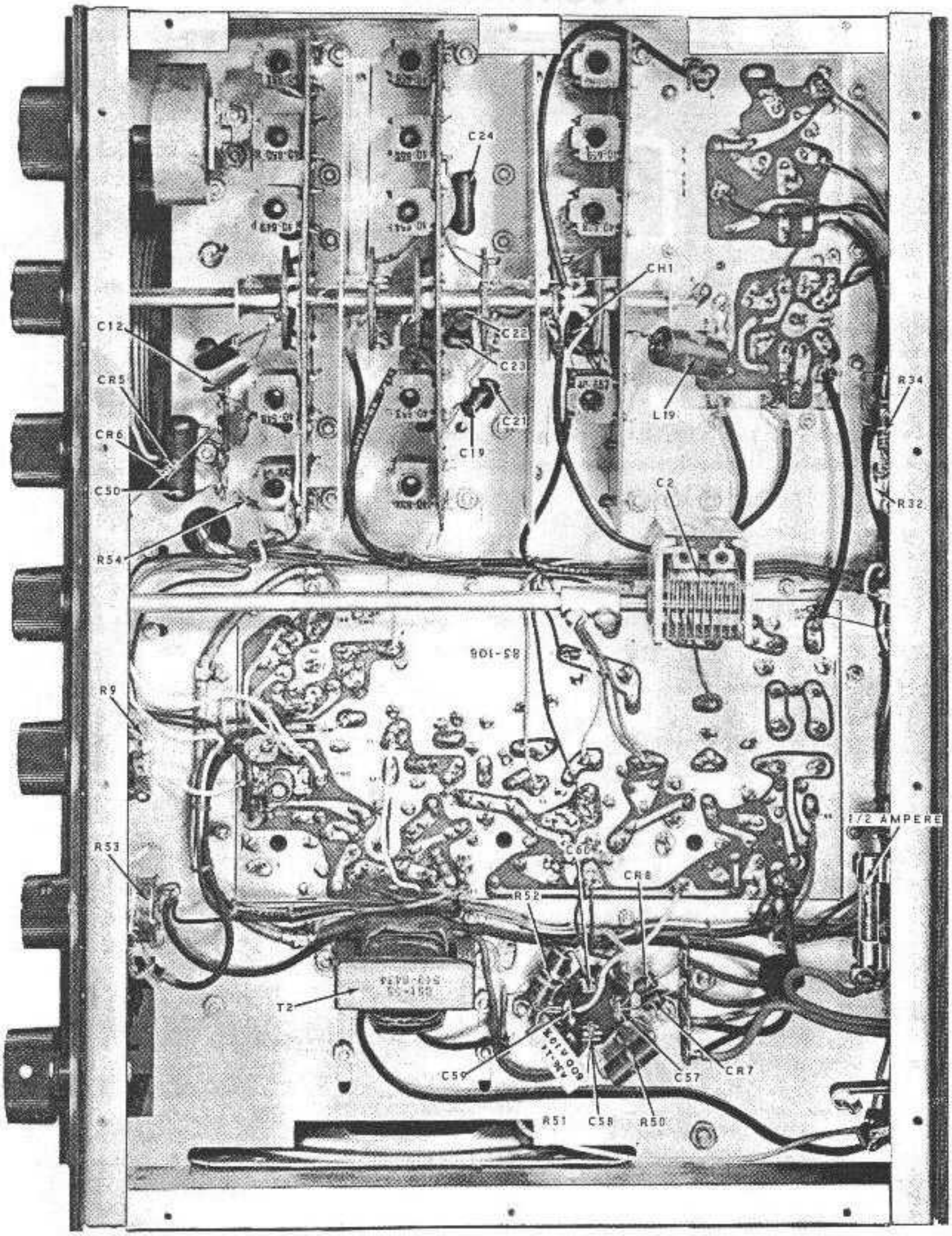

ManualsPlus.com

CHASSIS PHOTOGRAPHS (CONTINUED)

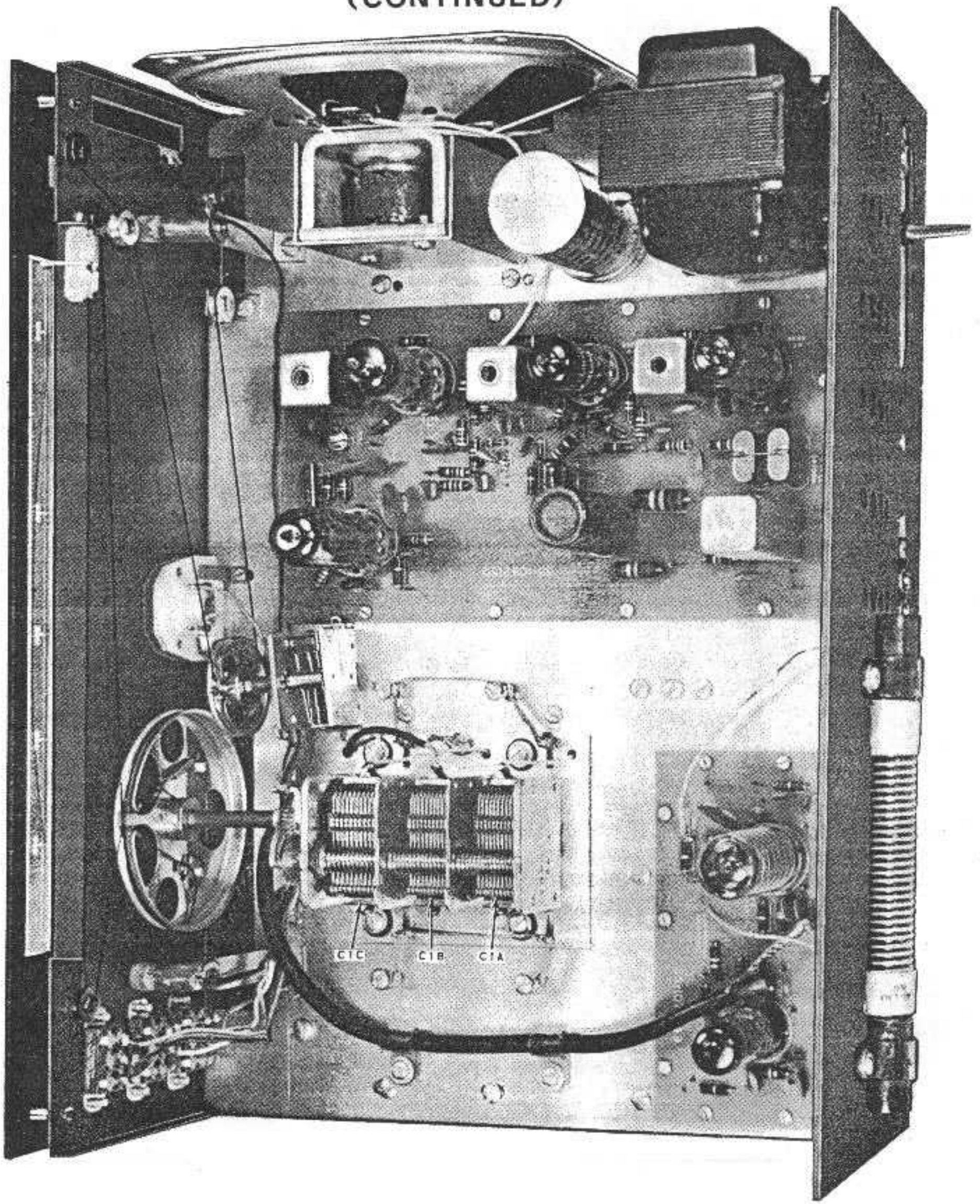

ManualsPlus.com

BLOCK DIAGRAM

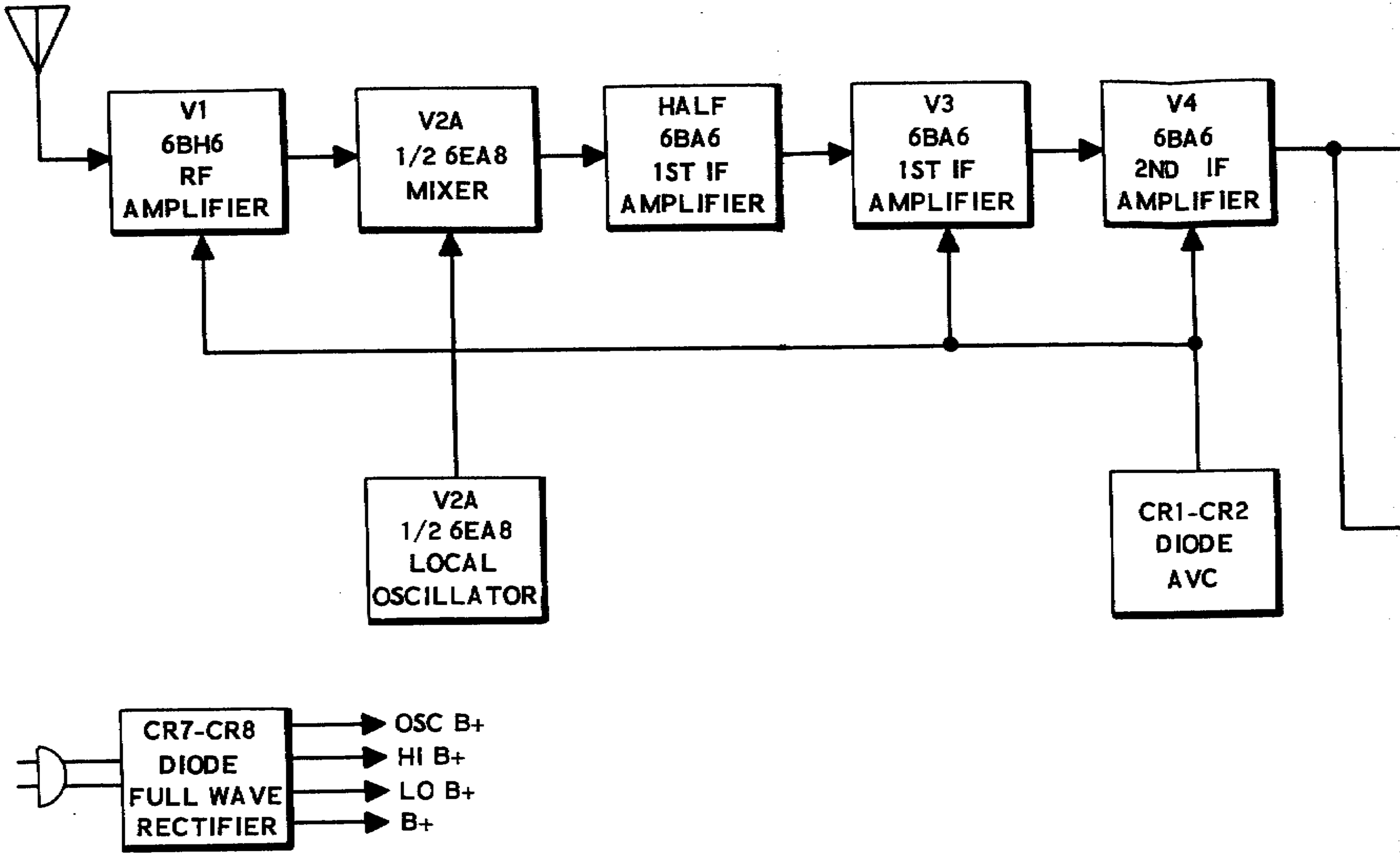

ManualsPlus.com

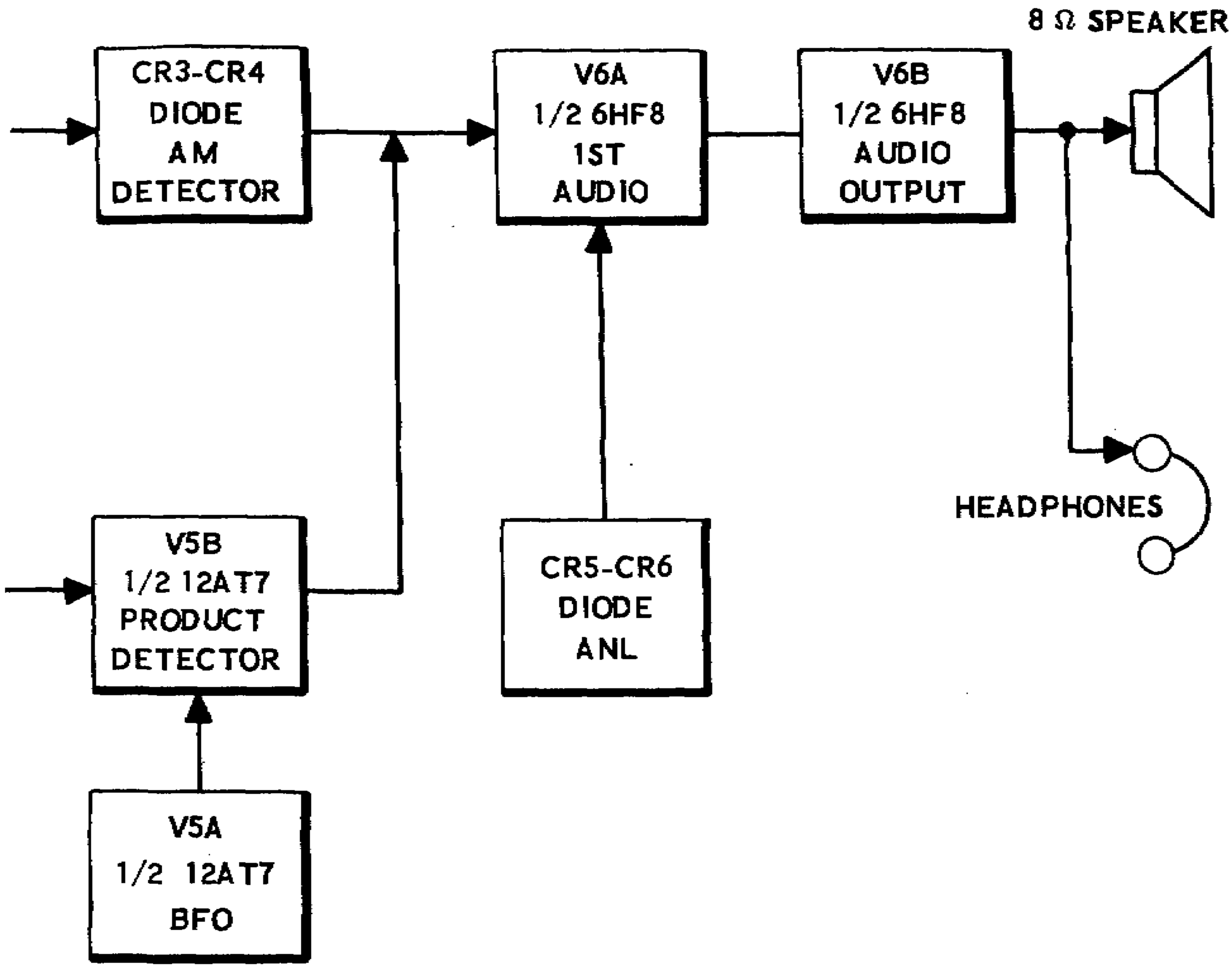

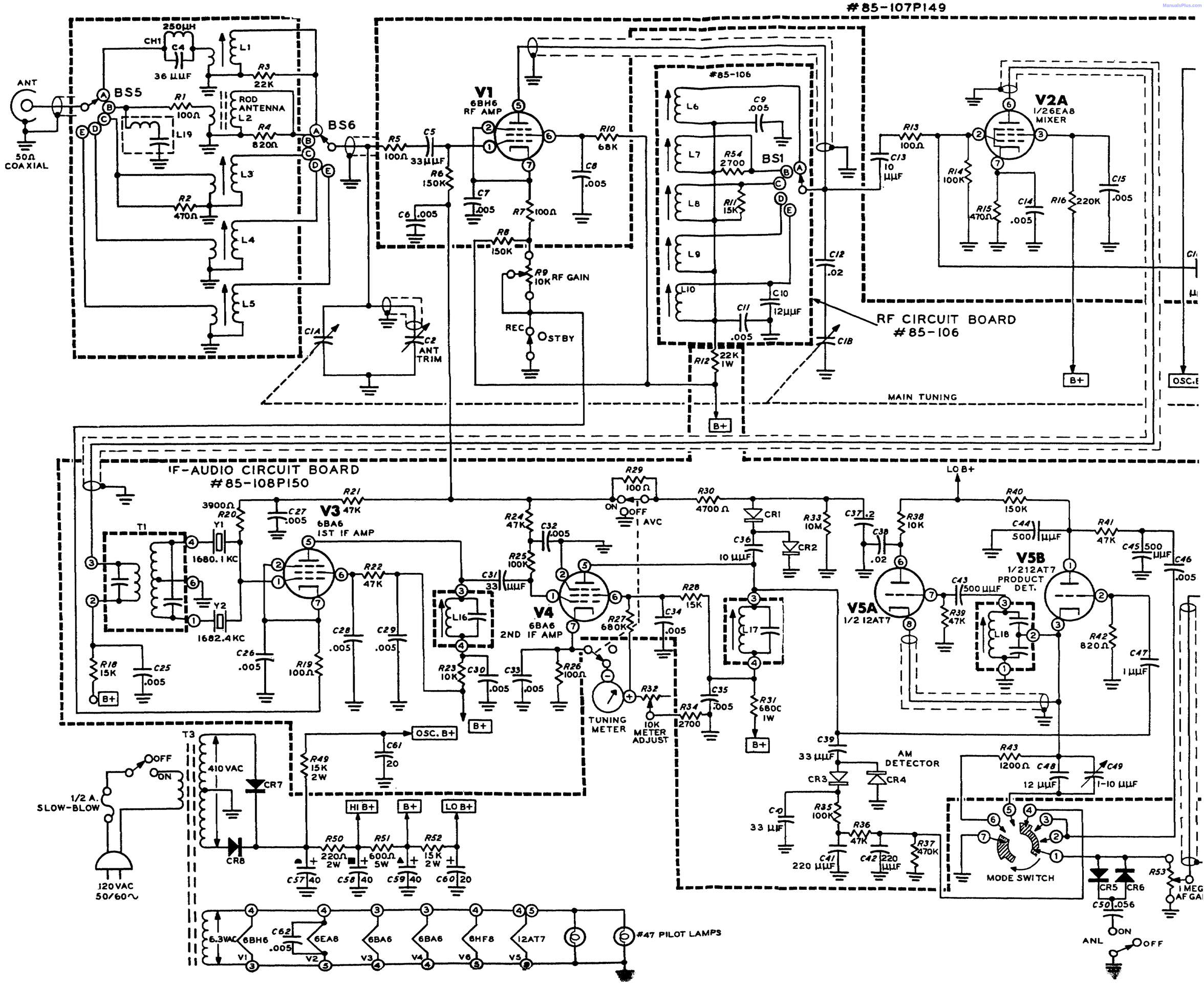
#85-107P149
ANT
50Ω COAXIAL
BS5
250μH
CH1
C4
36 μμF
L1
R3
22K
R1
100Ω
ROD ANTENNA
L2
L19
R4
820Ω
L3
R2
470Ω
L4
L5
BS6
R5
100Ω
C5
33μμF
R6
150K
C6 .005
C7
.005
V1
6BH6
RF AMP
R7
100Ω
R8
150K
R9
10K
RF GAIN
REC
OSTBY
R10
68K
C8
.005
C1A
C2
ANT TRIM
#85-106
L6
C9
.005
L7
R54
2700
BS1
L8
R11
15K
L9
L10
C10
12μμF
C11
.005
C12
.02
C1B
R12
22K
1W
B+
RF CIRCUIT BOARD
#85-106
MAIN TUNING
R13
100Ω
C13
10
μμF
V2A
1/26EA8
MIXER
R14
100K
R15
470Ω
C14
.005
R16
220K
C15
.005
OSC.B
IF-AUDIO CIRCUIT BOARD
#85-108P150
R21
47K
V3
6BA6
1ST IF AMP
3900Ω
R20
C27
.005
T1
Y1
1680.1 KC
Y2
1682.4KC
R22
47K
C28
.005
C29
.005
C26
.005
R19
100Ω
R18
15K
C25
.005
L16
C31
33 μμF
R23
10K
C30
.005
C33
.005
R24
47K
C32
.005
R25
100K
V4
6BA6
2ND IF AMP
R27
680K
R26
100Ω
R29
100Ω
ON
OFF
AVC
R30
4700Ω
CR1
C36
10 μμF
CR2
R33
10M
C37 .2
C38
.02
R28
15K
C34
.005
L17
C35
.005
R31
680C
1W
R32
10K
METER ADJUST
TUNING METER
R34
2700
LO B+
R38
10K
R40
150K
C44
500 μμF
R41
47K
C45 500 μμF
C46
.005
V5B
1/212AT7
PRODUCT DET.
C43
500 μμF
V5A
1/2 12AT7
R39
47K
L18
R42
820Ω
C47
1 μμF
C39
33 μμF
AM DETECTOR
CR3
CR4
C40
33 μμF
R35
100K
R36
47K
C41
220 μμF
C42 220 μμF
R37
470K
R43
1200Ω
C48
12 μμF
C49
1-10 μμF
MODE SWITCH
CR5
CR6
C50 .056
R53
1 MEG
AF GAIN
ANL
ON
OFF
T3
OFF
ON
1/2 A. SLOW-BLOW
120 VAC 50/60~
410 VAC
CR7
CR8
R49
15K
2W
C61
20
OSC. B+
HI B+
B+
LO B+
R50
220Ω
2W
R51
600Ω
5W
R52
15K
2W
C57 40
C58 40
C59 40
C60 20
6.3VAC
C62
.005
6BH6
V1
6EA8
V2
6BA6
V3
6BA6
V4
6HF8
V6
12AT7
V5
#47 PILOT LAMPS