ManualsPlus.com

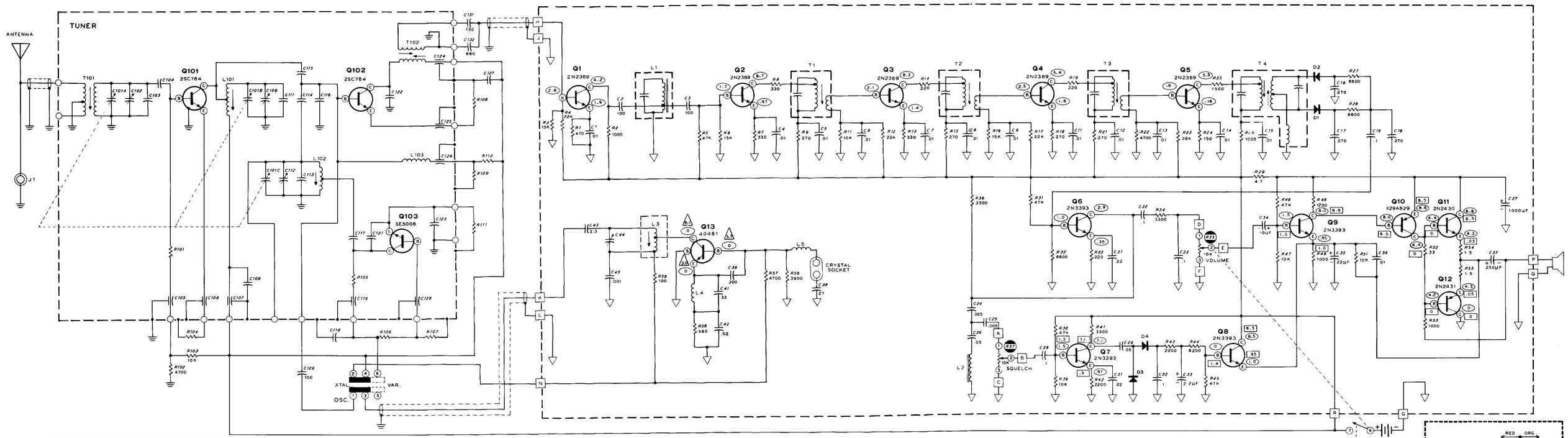

HEATH PART NO.	MANUFACTURER AND TYPE NO.		BASING
417-118	G.E.	2N3393	BASE, COLLECTOR, EMITTER
417-121	AMPEREX	2N2430	EMITTER, BASE, COLLECTOR
417-122	AMPEREX	2N2431	EMITTER, BASE, COLLECTOR
417-154	G.E.	2N2369	EMITTER, BASE, COLLECTOR
417-190	R C A	40481	EMITTER, BASE, SHIELD, COLLECTOR
417-201	G.E.	X29A829	BASE, COLLECTOR, EMITTER

SCHEMATIC OF THE HEATHKIT®
VHF-FM MONITOR RECEIVER
MODEL GR-88

1. RESISTOR AND CAPACITOR NUMBERS ARE IN THE FOLLOWING GROUPS:

   0-99 PARTS ON THE CIRCUIT BOARD.
   100-199 PARTS IN THE TUNER

2. REFER TO THE CHASSIS PHOTOGRAPHS AND CIRCUIT BOARD X-RAY VIEW FOR THE PHYSICAL LOCATION OF PARTS.

3. ALL RESISTORS ON THE CIRCUIT BOARD ARE 1/2 WATT. RESISTOR VALUES ARE IN OHMS (K= 1000, M= 1,000,000).

4. ALL CAPACITOR VALUES LESS THAN 1 ARE µF. VALUES OF 1 AND ABOVE ARE IN pF UNLESS MARKED OTHERWISE.

5. ◯ THIS SYMBOL INDICATES A POSITIVE DC VOLTAGE MEASUREMENT TAKEN WITH AND 11 MEGOHM INPUT VOLTMETER FROM THE POINT INDICATED TO CHASSIS GROUND. VOLTAGES MAY VARY ±20%. THE OSC. SWITCH IS IN THE VAR. POSITION. THE SQUELCH CONTROL IS FULLY COUNTER-CLOCKWISE. NO STATIONS ARE BEING RECEIVED.

6. ▭ THIS SYMBOL INDICATES A POSITIVE DC VOLTAGE MEASUREMENT TAKEN WITH THE OSC. SWITCH IN THE VAR. POSITION AND THE SQUELCH CONTROL SET AT THRESHOLD. NO STATIONS ARE BEING RECEIVED.

7. △ THIS SYMBOL INDICATES A POSITIVE DC VOLTAGE MEASUREMENT TAKEN WITH THE OSC. SWITCH IN THE XTAL. POSITION. THE SQUELCH CONTROL IS FULLY COUNTERCLOCKWISE. NO STATIONS ARE BEING RECEIVED.

8. ▽ INDICATES CIRCUIT BOARD GROUND.

9. ⏚ INDICATES CHASSIS GROUND.

10. ⬬ THIS SYMBOL AROUND A NUMBER INDICATES THAT THE PART IS MOUNTED ON THE CHASSIS EVEN THOUGH THE SCHEMATIC SUGGESTS THAT THE PART IS MOUNTED ON THE CIRCUIT BOARD.

ManualsPlus.com

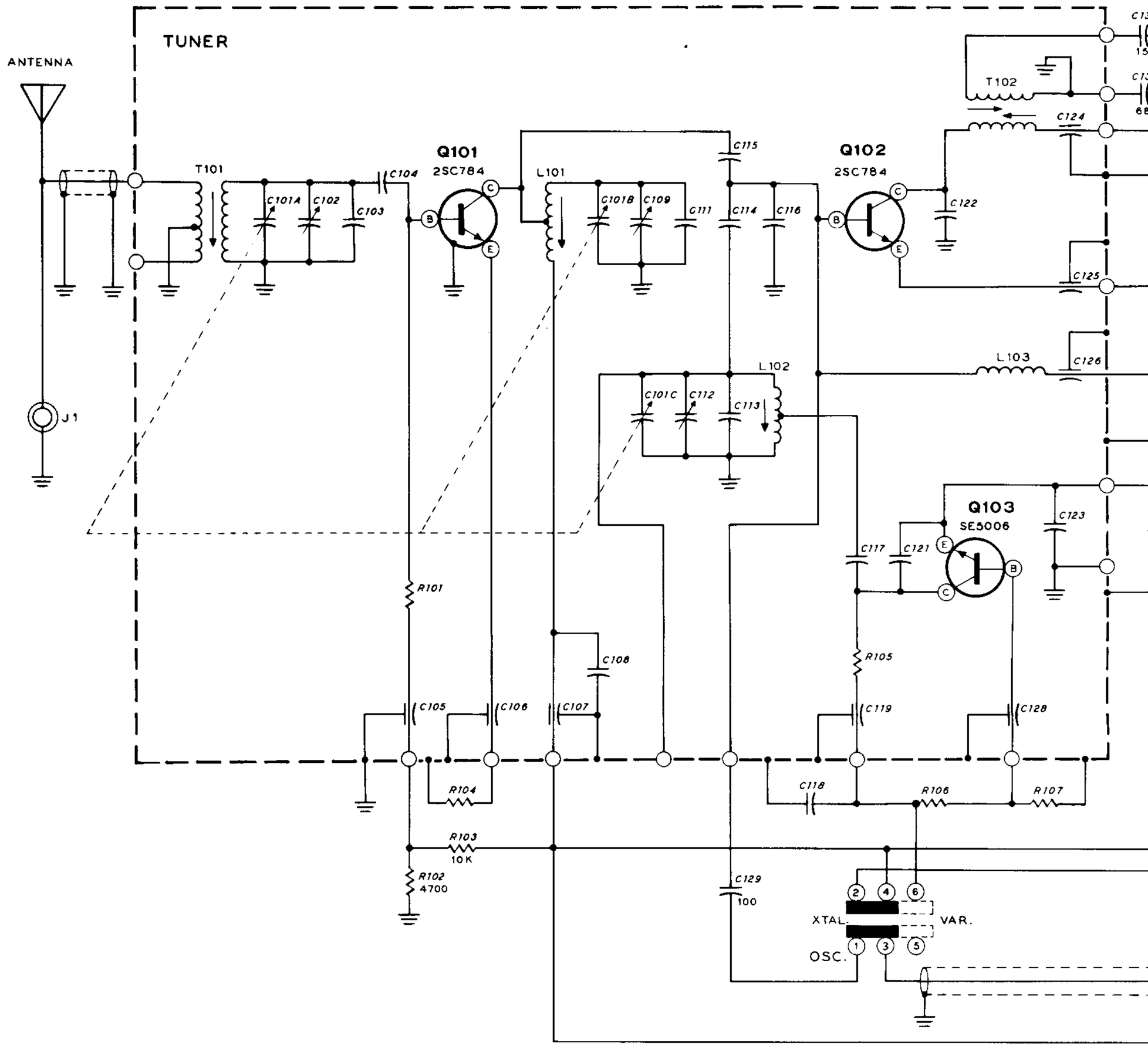

HEATH PART NO.	MANUFACTURER AND TYPE NO.		BASING
417-118	G.E.	2N3393	BASE, COLLECTOR, EMITTER
417-121	AMPEREX	2N2430	EMITTER, BASE, COLLECTOR
417-122	AMPEREX	2N2431	EMITTER, BASE, COLLECTOR
417-154	G.E.	2N2369	EMITTER, BASE, COLLECTOR
417-190	R C A	40481	EMITTER, BASE, SHIELD, COLLECTOR
417-201	G.E.	X29A829	BASE, COLLECTOR, EMITTER

ManualsPlus.com

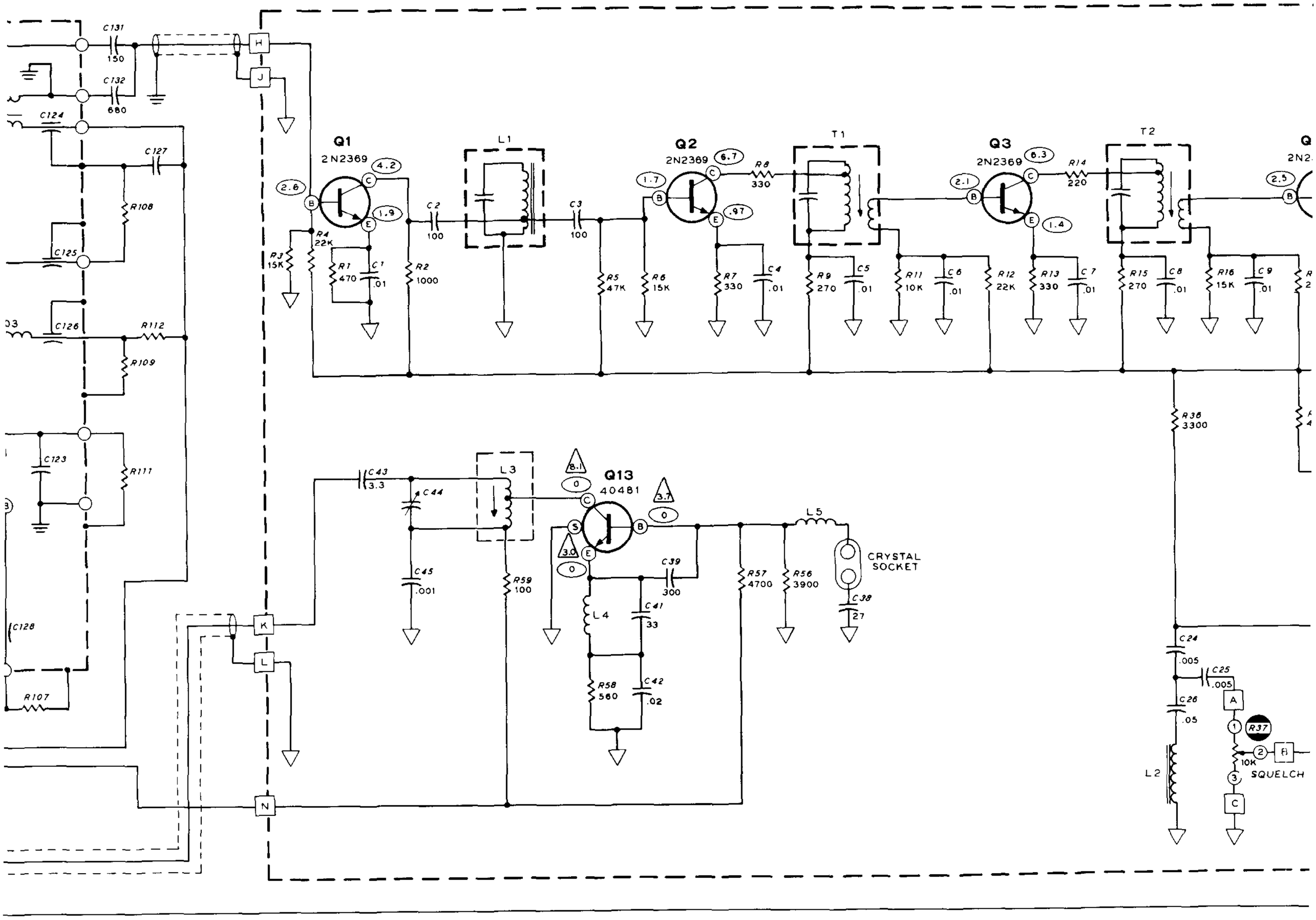

SCHEMATIC OF THE
HEATHKIT®
VHF-FM MONITOR RECEIVER
MODEL GR-88

1. RESISTOR AND CAPACITOR NUMBERS ARE IN THE FOLLOWING GROUPS:

0-99	PARTS ON THE CIRCUIT BOARD.
100-199	PARTS IN THE TUNER

2. REFER TO THE CHASSIS PHOTOGRAPHS AND CIRCUIT BOARD X-RAY VIEW FOR THE PHYSICAL LOCATION OF PARTS.

3. ALL RESISTORS ON THE CIRCUIT BOARD ARE 1/2 WATT. RESISTOR VALUES ARE IN OHMS (K= 1000. M= 1,000,000).

4. ALL CAPACITOR VALUES LESS THAN 1 ARE µF. VALUES OF 1 AND ABOVE ARE IN pF UNLESS MARKED OTHERWISE.

5. ⬭ THIS
TAKEN WI
TO CHASS
IS IN THE
CLOCKWIS

6. ▭ THIS
TAKEN WI
CONTROL

7. △ THIS
TAKEN
CONTROL
RECEIVED

8. ▽ INDI

9. ⏚ INDI

10. ⊖ THIS
MOUI
THAT THE

ManualsPlus.com

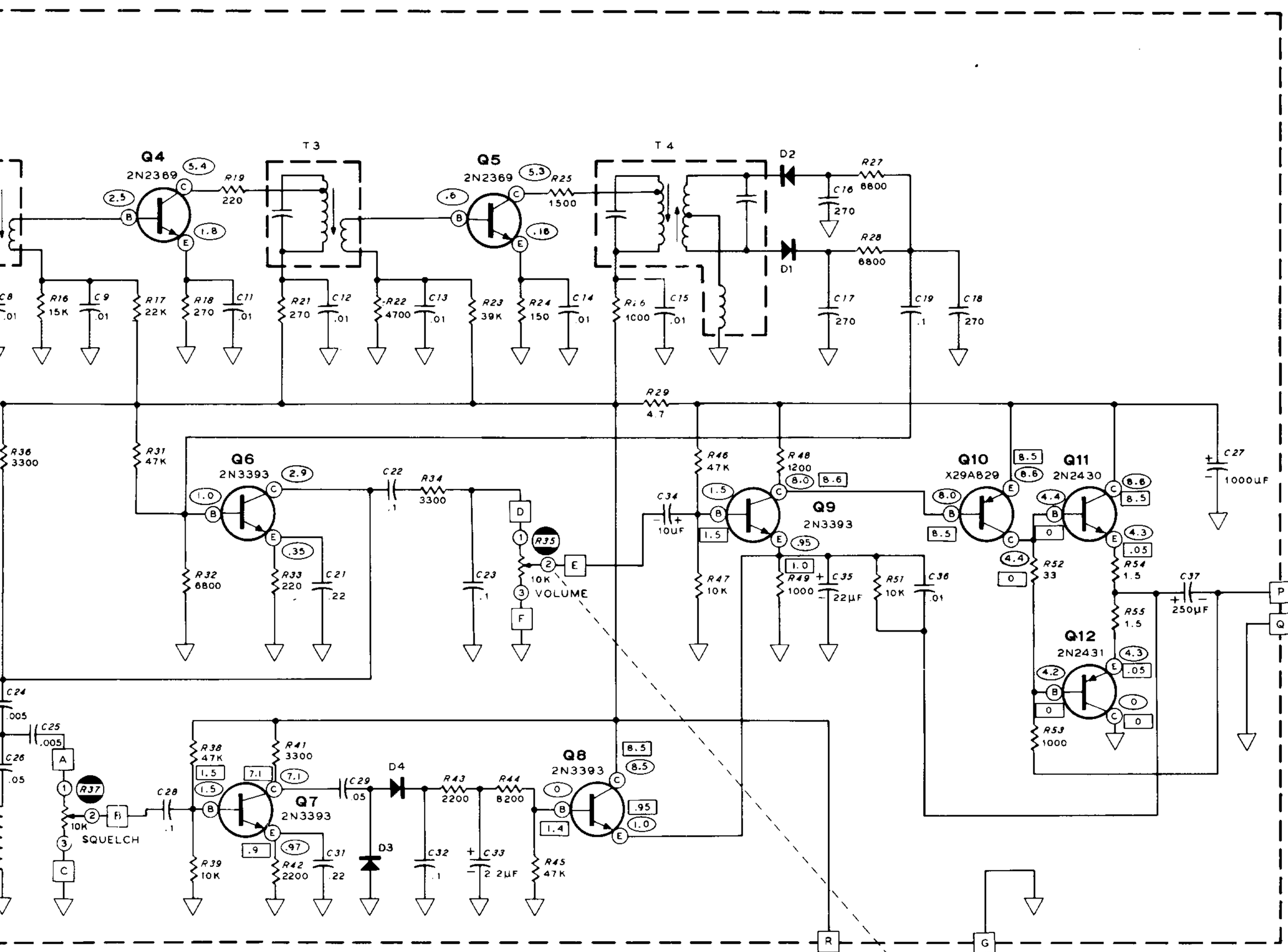

5. THIS SYMBOL INDICATES A POSITIVE DC VOLTAGE MEASUREMENT TAKEN WITH AND 11 MEGOHM INPUT VOLTMETER FROM THE POINT INDICATED TO CHASSIS GROUND. VOLTAGES MAY VARY ±20%. THE OSC. SWITCH IS IN THE VAR. POSITION. THE SQUELCH CONTROL IS FULLY COUNTER-CLOCKWISE. NO STATIONS ARE BEING RECEIVED.

6. THIS SYMBOL INDICATES A POSITIVE DC VOLTAGE MEASUREMENT TAKEN WITH THE OSC. SWITCH IN THE VAR. POSITION AND THE SQUELCH CONTROL SET AT THRESHOLD. NO STATIONS ARE BEING RECEIVED.

7. THIS SYMBOL INDICATES A POSITIVE DC VOLTAGE MEASUREMENT TAKEN WITH THE OSC. SWITCH IN THE XTAL. POSITION. THE SQUELCH CONTROL IS FULLY COUNTERCLOCKWISE. NO STATIONS ARE BEING RECEIVED.

8. INDICATES CIRCUIT BOARD GROUND.

9. INDICATES CHASSIS GROUND.

10. THIS SYMBOL AROUND A NUMBER INDICATES THAT THE PART IS MOUNTED ON THE CHASSIS EVEN THOUGH THE SCHEMATIC SUGGESTS THAT THE PART IS MOUNTED ON THE CIRCUIT BOARD.

ManualsPlus.com

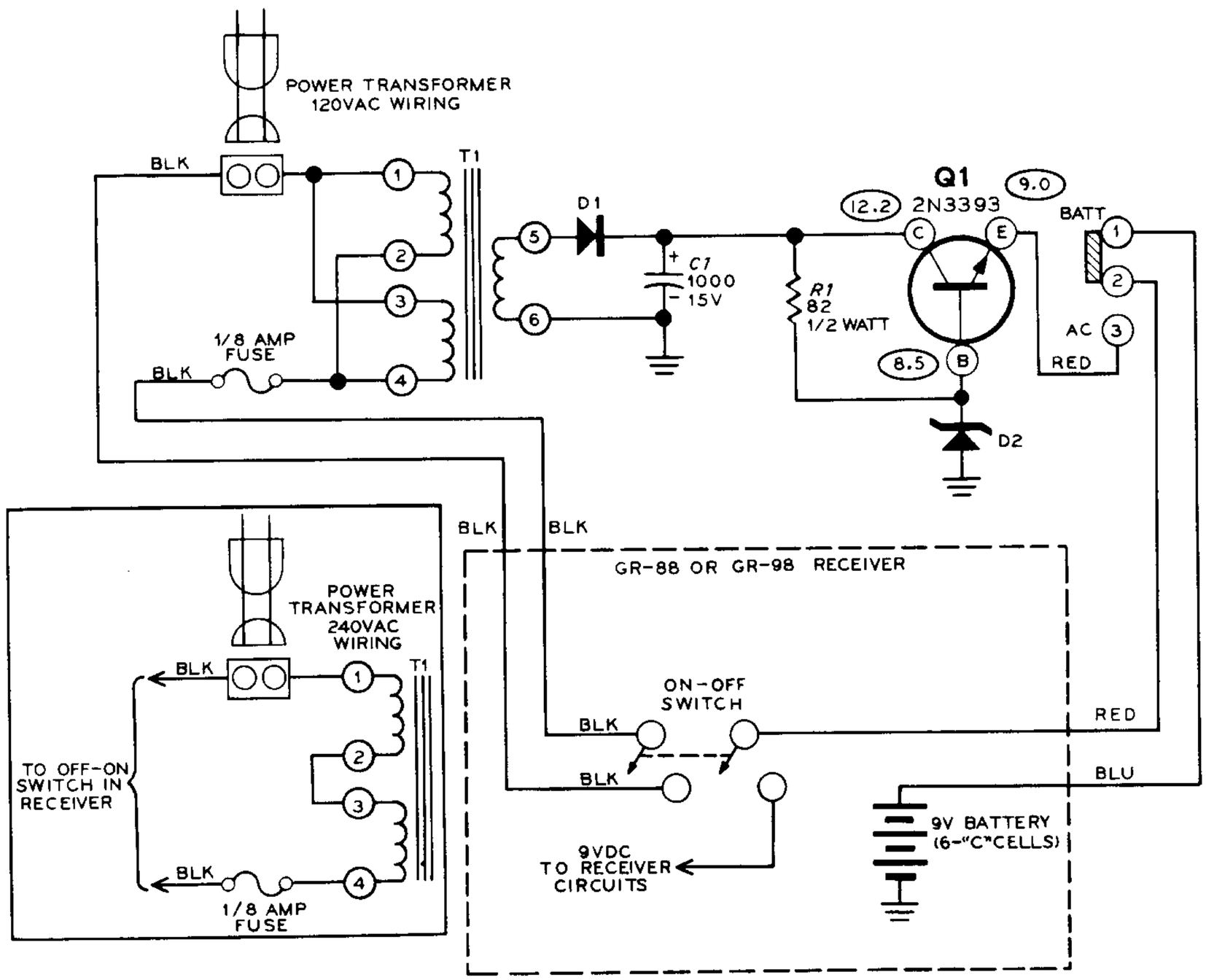

SCHEMATIC OF THE HEATHKIT® AC POWER SUPPLY MODEL GRA-88-1

NOTES:

1. ⬭ THIS SYMBOL INDICATES A POSITIVE DC VOLTAGE MEASUREMENT THAT WAS TAKEN WITH A HIGH IMPEDANCE INPUT VOLTMETER FROM THE POINT INDICATED TO CHASSIS GROUND.
2. REFER TO THE CHASSIS PHOTO FOR THE PHYSICAL LOCATION OF PARTS.