ManualsPlus.com

HEATHKIT® MANUAL

for the

ELECTRONIC KEYER

Model HD-1410

595-1692-06

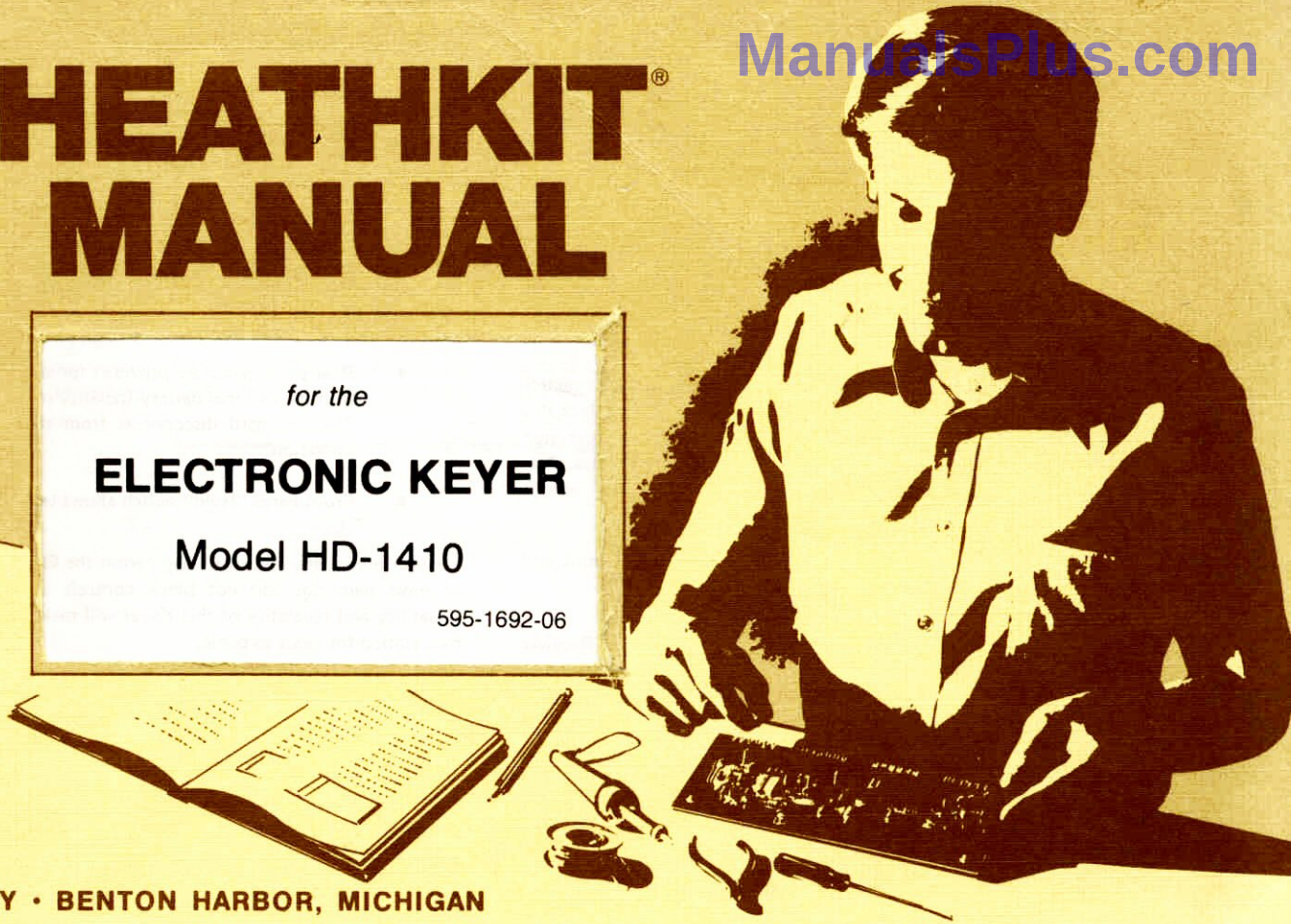

HEATH COMPANY · BENTON HARBOR, MICHIGAN

YOUR HEATHKIT 90-DAY LIMITED WARRANTY

Consumer Protection Plan for Heathkit Consumer Products

Welcome to the Heath family. We believe you will enjoy assembling your kit and will be pleased with its performance. Please read this Consumer Protection Plan carefully. It is a "LIMITED WARRANTY" as defined in the U.S. Consumer Product Warranty and Federal Trade Commission Improvement Act. This warranty gives you specific legal rights, and you may also have other rights which vary from state to state.

Heath's Responsibility

PARTS — Replacements for factory defective parts will be supplied free for 90 days from date of purchase. Replacement parts are warranted for the remaining portion of the original warranty period. You can obtain warranty parts direct from Heath Company by writing or telephoning us at (616) 982-3571. And we will pay shipping charges to get those parts to you ... anywhere in the world.

SERVICE LABOR — For a period of 90 days from the date of purchase, any malfunction caused by defective parts or error in design will be corrected at no charge to you. You must deliver the unit at your expense to the Heath factory, any Heathkit Electronic Center (units of Veritechnology Electronics Corporation), or any of our authorized overseas distributors.

TECHNICAL CONSULTATION — You will receive free consultation on any problem you might encounter in the assembly or use of your Heathkit product. Just drop us a line or give us a call. Sorry, we cannot accept collect calls.

NOT COVERED — The correction of assembly errors, adjustments, calibration, and damage due to misuse, abuse, or negligence are not covered by the warranty. Use of corrosive solder and/or the unauthorized modification of the product or of any furnished component will void this warranty in its entirety. This warranty does not include reimbursement for inconvenience, loss of use, customer assembly, set-up time, or unauthorized service.

This warranty covers only Heath products and is not extended to other equipment or components that a customer uses in conjunction with our products.

SUCH REPAIR AND REPLACEMENT SHALL BE THE SOLE REMEDY OF THE CUSTOMER AND THERE SHALL BE NO LIABILITY ON THE PART OF HEATH FOR ANY SPECIAL, INDIRECT, INCIDENTAL OR CONSEQUENTIAL DAMAGES, INCLUDING BUT NOT LIMITED TO ANY LOSS OF BUSINESS OR PROFITS, WHETHER OR NOT FORSEEABLE.

Some states do not allow the exclusion or limitation of incidental or consequential damages, so the above limitation or exclusion may not apply to you.

Owner's Responsibility

EFFECTIVE WARRANTY DATE — Warranty begins on the date of first consumer purchase. You must supply a copy of your proof of purchase when you request warranty service or parts.

ASSEMBLY — Before seeking warranty service, you should complete the assembly by carefully following the manual instructions. Heathkit service agencies cannot complete assembly and adjustments that are customer's responsibility.

ACCESSORY EQUIPMENT — Performance malfunctions involving other non-Heath accessory equipment, (antennas, audio components, computer peripherals and software, etc.) are not covered by this warranty and are the owner's responsibility.

SHIPPING UNITS — Follow the packing instructions published in the assembly manuals. Damage due to inadequate packing cannot be repaired under warranty.

If you are not satisfied with our service (warranty or otherwise) or our products, write directly to our Director of Customer Service, Heath Company, Benton Harbor MI 49022. He will make certain your problems receive immediate, personal attention.

HEATH COMPANY PHONE DIRECTORY

ManualsPlus.com

The following telephone numbers are direct lines to the departments listed:

Kit orders and delivery information	(616) 982-3411
Credit	(616) 982-3561
Replacement Parts	(616) 982-3571

Technical Assistance Phone Numbers
8:00 A.M. to 4:30 P.M., EST, Weekdays Only

Audio,	(616) 982-3310
Amateur Radio	(616) 982-3296
Test Equipment, Weather Instruments and Home Clocks	(616) 982-3315
Television	(616) 982-3307
Aircraft, Marine, Security, Scanners, Automotive, Appliances and General Products	(616) 982-3496
Computers — Hardware	(616) 982-3309
Computers — Software:	
Operating Systems, Languages, Utilities	(616) 982-3860
Application Programs	(616) 982-3884

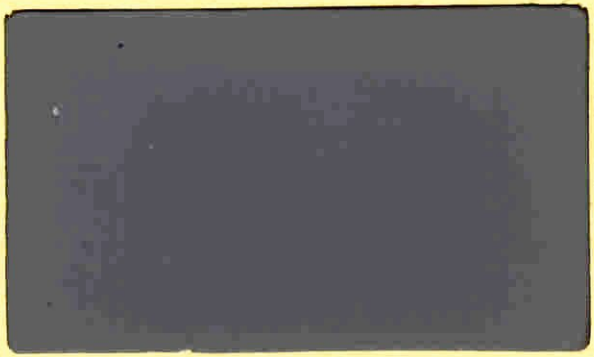

Prices and specifications subject to change without notice.

Heathkit® Manual

for the

ELECTRONIC KEYER

Model HD-1410

595-1692-06

Serr# 10-43990

HEATH COMPANY
BENTON HARBOR, MICHIGAN 49022

ManualsPlus.com

TABLE OF CONTENTS

Introduction 2
Parts List 3
Step-by-Step Assembly
- Circuit Board Assembly 15
- Paddle Assembly 26
- Chassis Assembly 30
- Paddle Wiring 33
- Front Panel Assembly 34
- Rear Panel Assembly 38
- Final Wiring 43
- Knob Installation 45

Tests and Adjustments 46
Final Assembly 49
Installation 52
Operation 54
In Case of Difficulty 55
- Troubleshooting 56

Specifications 58
Circuit Description 60
Circuit Board X-Ray Views 64
Circuit Board Voltage Chart 66
Chassis Photograph 67
Identification Chart 68
Schematic ... (fold-out from page) 71
Warranty ..... Inside front cover
Customer Service ..... Inside back cover

Copyright© 1975
Heath Company
All rights reserved

Printed in U.S.A.

ManualsPlus.com

INTRODUCTION

The HD-1410 is a compact Electronic Keyer with a built-in AC power supply, mechanical paddles, sidetone oscillator, and speaker in one package. It is designed and styled to complement the "SB" Series, and is compatible with virtually all modern transmitters and transceivers, as well as most older rigs.

The following features make the Electronic Keyer versatile:

- "Iambic" operation – Lets you form many Morse code characters with less wrist movement than is required with keyers that lack this feature. If the two independant paddles are treated as one, operation is identical to single-paddle keyers with dot and dash memories. Dots and dashes are self-completing, and proper ratio is always maintained.
- Built-in sidetone oscillator and speaker with adjustable tone and volume.
- Headphone jack on the rear panel that silences the speaker. Receiver audio is fed to the headphones by a separate rear panel jack.
- Built-in paddles have excellent "feel" and are easily adjustable for tension and travel.
- Solid-state output eliminates the bounce and sticking problems associated with relays.
- Weighted cabinet to prevent the keyer from sliding on the operating surface.
- Rear panel jacks are provided for an external key, and for operation from an external battery (polarity protected) for portable operation. The line cord disconnects from the Electronic Keyer for battery operation.
- Front panel "Hold" switch allows transmitter tune-up.

Low profile styling and small size permit the Electronic Keyer to be set in front of most ham rigs and not block controls or take up valuable space. The versatility and reliability of this Keyer will make it a welcome addition to your ham station for years to come.

Refer to the "Kit Builders Guide" for information on parts identification, tools, wiring, and soldering.

ManualsPlus.com

PARTS LIST

Check each part against the following list. Make a check (✓) in the space provided as you identify each part. Return any part that is packed in an individual envelope with the part number on it back in the envelope after you identify it until it is called for in a step. Do not throw away any packing materials until you account for all the parts.

Each circuit part in this kit has its own "Circuit Component Number" (R2, C4, SW1, etc.). This is a specific number for only that one part. The purpose of these numbers is to help you easily identify the same part in each section of this Manual. These numbers will appear:

- In the Parts List;
- At the beginning of each step where a component is installed;
- In some illustrations;
- In the sections at the rear of this Manual.

To order a replacement part, use the Parts Order Form furnished with this kit. If a Parts Order Form is not available, refer to "Replacement Parts" inside the rear cover of this Manual. For pricing information, refer to the separate "Heath Parts Price List."

QTY.	DESCRIPTION	PART No.	CIRCUIT Component No.
RESISTORS			
1/4-Watt			
NOTE: The resistors may be packed in more than one envelope. Open all the resistor envelopes before you check them against the Parts List.			
( ) 1	22 Ω (red-red-black)	1-42-12	R7
( ) 1	100 Ω (brown-black-brown)	1-1-12	R11
( ) 1	150 Ω (brown-green-brown)	1-37-12	R18
( ) 1	270 Ω (red-violet-brown)	1-21-12	R12

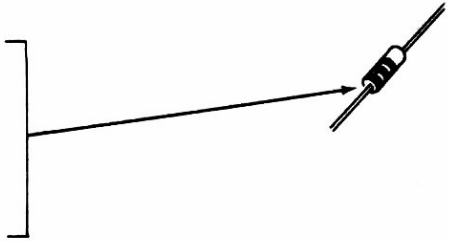

ManualsPlus.com

	QTY.	DESCRIPTION	PART No.	CIRCUIT Component No.
Resistors (cont'd.)				
( )	3	390 Ω (orange-white-brown)	1-23-12	R3, R4, R25
( )	1	470 Ω (yellow-violet-brown)	1-35-12	R19
( )	2	1000 Ω (brown-black-red)	1-2-12	R13, R27
( )	3	2200 Ω (red-red-red)	1-4-12	R1, R2, R16
( )	6	4700 Ω (yellow-violet-red)	1-8-12	R14, R15, R22, R23, R24, R26
( )	1	5600 Ω (green-blue red)	1-26-12	R9
( )	1	8200 Ω (gray-red-red)	1-28-12	R21
( )	1	10 kΩ (brown-black-orange)	1-9-12	R9
( )	1	15 kΩ (brown-green-orange)	1-10-12	R8
( )	1	39 kΩ (orange-white-orange)	1-29-12	R6
( )	1	100 kΩ (brown-black-yellow)	1-32-12	R5
1/2-Watt				
( )	1	220 Ω (red-red-brown)	1-45	R28
( )	1	33 kΩ (orange-orange-orange)	1-24	R103

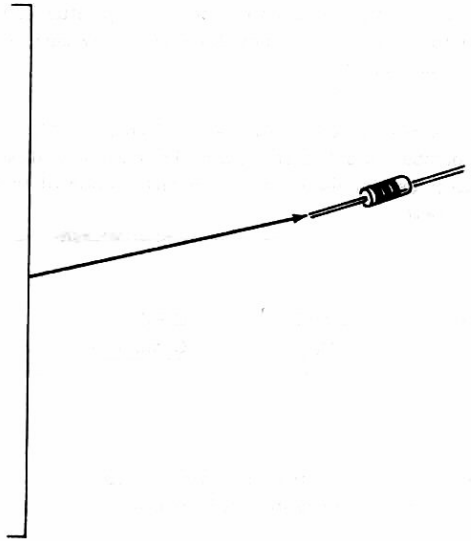

ManualsPlus.com

QTY.	DESCRIPTION	PART No.	CIRCUIT Component No.
	CAPACITORS		
	Disc		
( ) 1	.001 μF disc	21-140	C4
( ) 2	.005 μF disc (large)	21-72	C102, C104
( ) 1	.005 μF disc (small)	21-57	C103
( ) 2	.1 μF disc	21-95	C8, C9
( ) 2	.2 μF disc	21-99	C7, C101
	Electrolytic		
( ) 2	2 μF electrolytic	25-123	C5, C6
( ) 1	2.2 μF electrolytic	25-924	C3
( ) 2	22 μF electrolytic	25-233	C1, C2
( ) 1	1000 μF electrolytic	25-164	C11
	DIODES		
( ) 1	1N709A zener diode	56-58	D7
( ) 3	GD-510 germanium diode	56-89	D1, D2, D3
( ) 2	1N2071 silicon diode	57-27	D4, D5
( ) 5	1N4002 silicon diode	57-65	D6, D8, D9, D11, D12

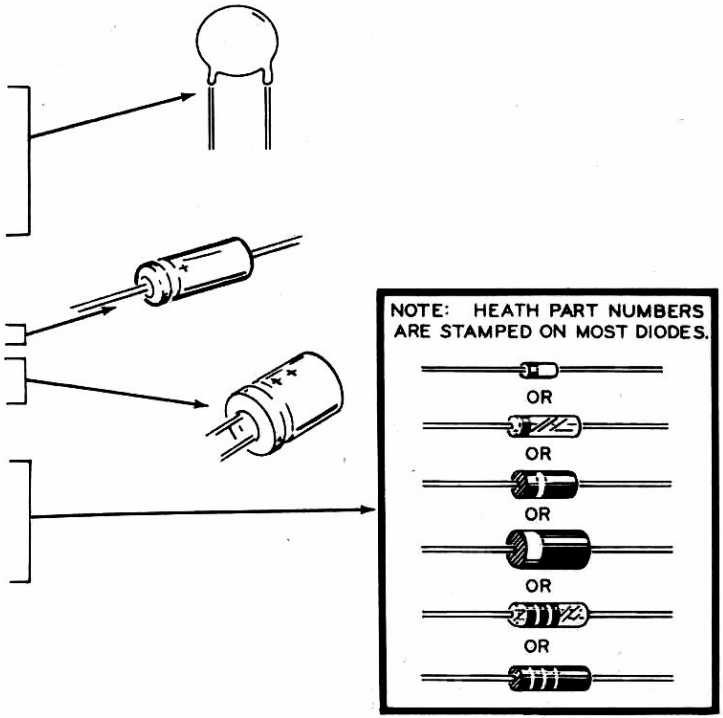

ManualsPlus.com

QTY.	DESCRIPTION	PART No.	CIRCUIT Component No.

TRANSISTORS

NOTE: Transistors and integrated circuits are marked for identification in one of the following four ways:

1. Part number.
2. Type number. (On integrated circuits this refers only to the numbers; the letters may be different or missing.)
3. Part number and type number.
4. Part number with a type number other than the one listed.

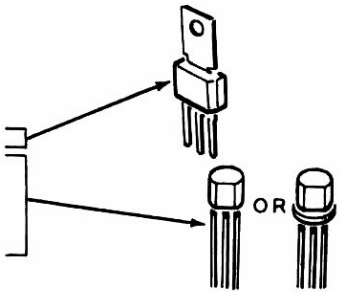

( )	1	D40C1 transistor	417-272	Q8
( )	1	X29A829 transistor	417-201	Q2
( )	2	MPSA42 transistor	417-294	Q6, Q7
( )	3	MPSA20 transistor	417-801	Q1, Q3, Q4
( )	1	MPS-D51 transistor	417-836	Q5

INTEGRATED CIRCUITS

The "Description" number may have additional letters and numbers other than those given in this list.

EXAMPLE: SN (7400)N or MC (7400)P

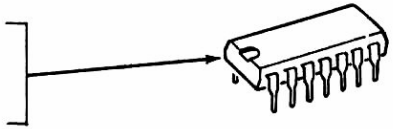

( )	2	7400 integrated circuit	443-1	IC1, IC2
( )	1	7402 integrated circuit	443-46	IC5
( )	1	7410 integrated circuit	443-12	IC3
( )	1	7473 integrated circuit	443-5	IC4

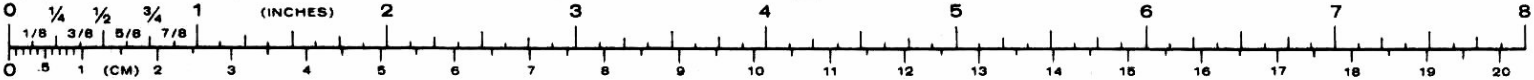

ManualsPlus.com

	QTY.	DESCRIPTION	PART No.	CIRCUIT Component No.
CONTROLS				
( )	1	750 Ω control	10-934	R17
( )	1	100 Ω control with switch	19-703	R102/S102A/S102B
( )	1	50 kΩ control with switch	19-704	R101/S101
OTHER ELECTRONIC PARTS				
( )	1	Power transformer	54-878	T1
( )	1	Neon lamp	412-15	PL1
( )	1	1/16-ampere, slow-blow fuse	421-27	
( )	1	Speaker	401-163	
WIRE-SLEEVING				
( )	12"	Bare wire (For soldering iron tip)	340-11	
( )	36"	Black wire	344-15	
( )	36"	Red wire	344-16	
( )	36"	Large brown wire	344-34	
( )	96"	Small brown wire	344-51	
( )	1"	Small black sleeving	346-1	
( )	6"	Large black sleeving	346-20	
( )	96"	Shielded cable	343-11	
( )	1	Clear sleeving (7" length)	346-26	
( )	1	Line cord	89-3	

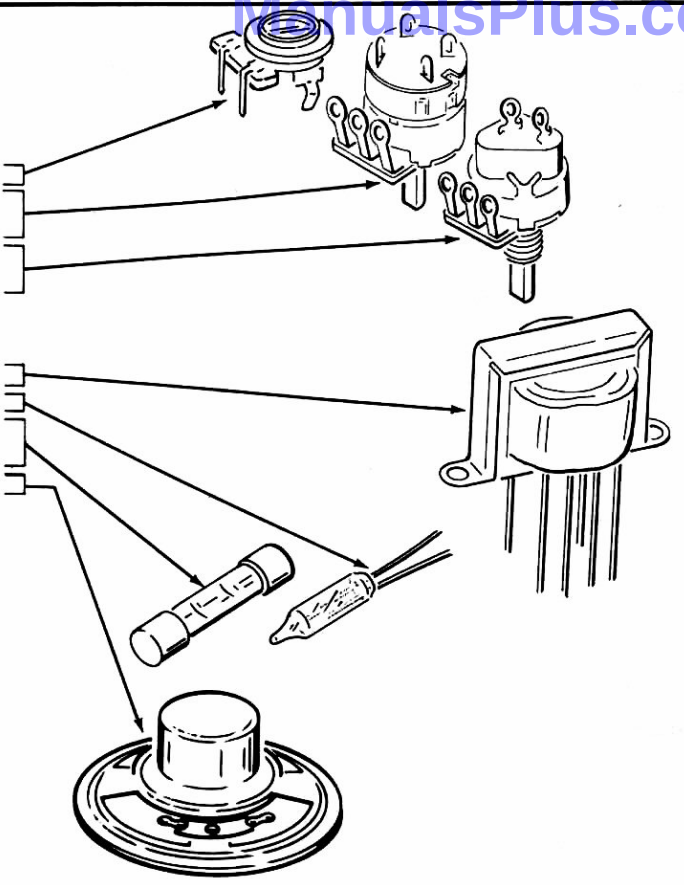

ManualsPlus.com

QTY.	DESCRIPTION	PART No.	CIRCUIT Component No.

HARDWARE

NOTES:

1. The hardware may be in more than one packet. Open all the hardware packets before you check the hardware against the Parts List.

2. The hardware is shown full size. You can identify a part by placing it on its drawing.

#2 Hardware

( )	2	2-56 x 5/16" screw	250-422
( )	2	2-56 nut	252-51

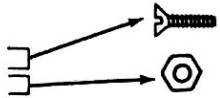

#4 Hardware

( )	10	4-40 x 1/4" screw	250-52
( )	9	4-40 x 5/16" screw	250-213
( )	19	4-40 nut	252-2
( )	17	#4 lockwasher	254-9
( )	2	#4 solder lug	259-9

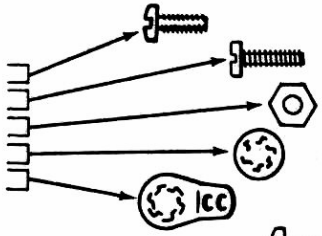

#6 Hardware

( )	2	6-32 x 1/4" screw	250-56
( )	4	6-32 x 5/16" screw	250-432
( )	13	6-32 x 3/8" screw	250-89

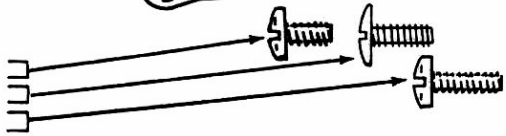

ManualsPlus.com

	QTY.	DESCRIPTION	PART No.	CIRCUIT Component No.
#6 Hardware (cont'd.)				
( )	2	6-32 x 3/8" flat head screw	250-434	
( )	3	6-32 x 1/2" screw	250-162	
( )	1	6-32 x 11/16" screw	250-206	
( )	2	6-32 x 1-9/16" stud	250-472	
( )	22	6-32 nut	252-3	
( )	2	6-32 thumbnut	252-23	
( )	1	6-32 press-in nut	252-109	
( )	2	#6 fiber flat washer	253-1	
( )	4	#6 shoulder washer	253-2	
( )	8	#6 metal flat washer	253-60	
( )	22	#6 lockwasher	254-1	
( )	1	#6 external lockwasher	254-6	
( )	2	#6 solder lug	259-1	
Other				
( )	2	#5 flat washer	253-40	
( )	3	Control nut	252-7	
( )	3	Control flat washer	253-10	
( )	3	Control lockwasher	254-4	
( )	1	Push-on nut	252-32	
( )	1	1/2" spacer	255-15	
( )	1	5/16" spacer	255-49	

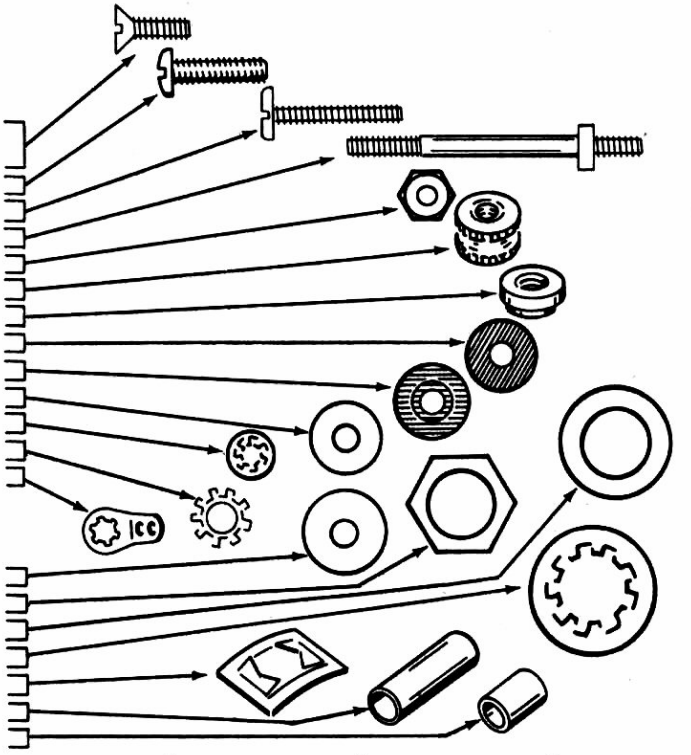

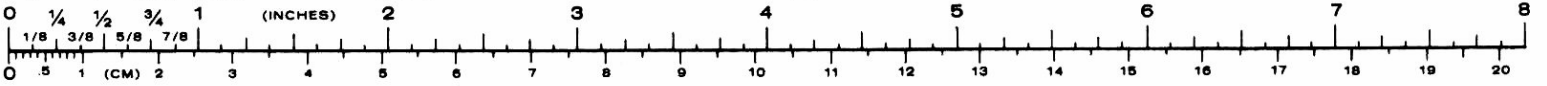

ManualsPlus.com

	QTY.	DESCRIPTION	PART No.	CIRCUIT Component No.
Other (cont'd.)				
( )	1	1/16" spacer	255-74	
( )	4	Rivet	256-15	
( )	1	Wire spring	258-179	
CONNECTORS				
( )	1	Male connector housing	432-148	
( )	1	Female connector housing	432-149	
( )	2	Male terminal pin	432-854	
( )	2	Female terminal pin	432-855	
( )	1	AC power socket	432-4	
( )	3	Phono socket	434-42	
( )	5	IC socket	434-298	

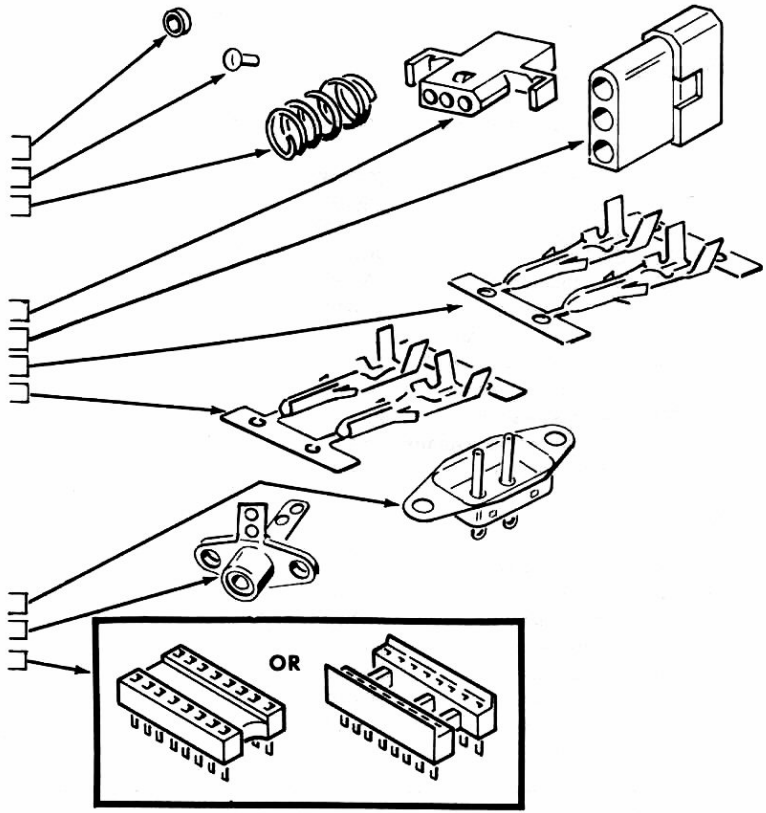

ManualsPlus.com

	QTY.	DESCRIPTION	PART No.	CIRCUIT Component No.
Connectors (cont'd.)				
( )	1	Phone jack	436-21	
( )	1	Phone plug	438-3	
( )	3	Phono plug	438-46	
METAL PARTS				
( )	2	Cabinet shell	90-1133-2	
( )	1	Right side panel	200-1212	
( )	1	Left side panel	200-1211	

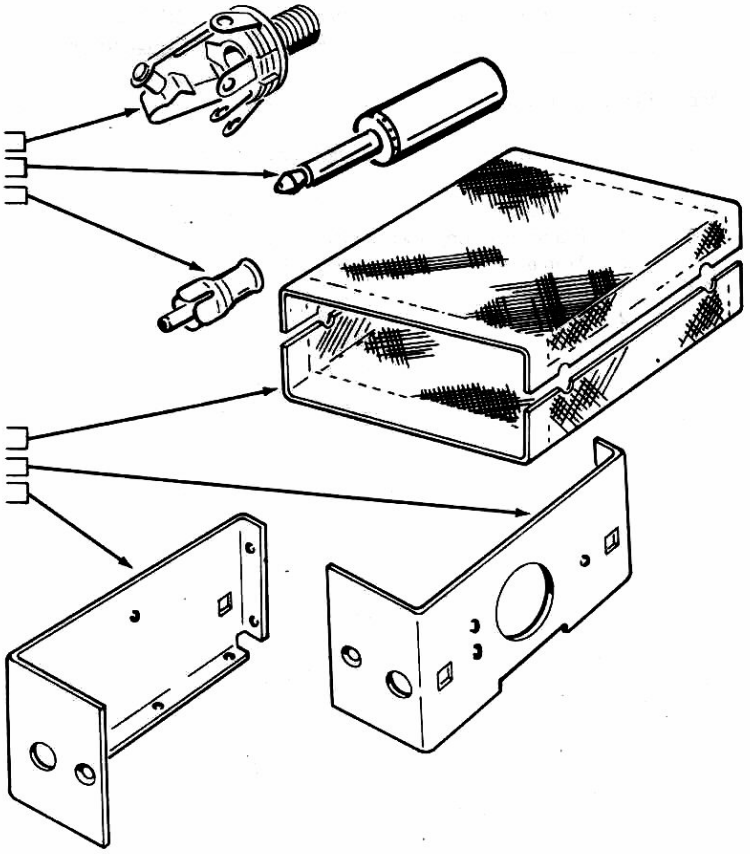

ManualsPlus.com

	QTY.	DESCRIPTION	PART No.	CIRCUIT Component No.
Metal Parts (cont'd.)				
( )	1	Front panel	203-1644-2	
( )	1	Rear panel	203-1645-2	
( )	1	Paddle mounting bracket	204-2019	
( )	2	Trim plate	205-1588	
( )	1	Heat sink	215-86	
( )	2	Flat spring	258-189	

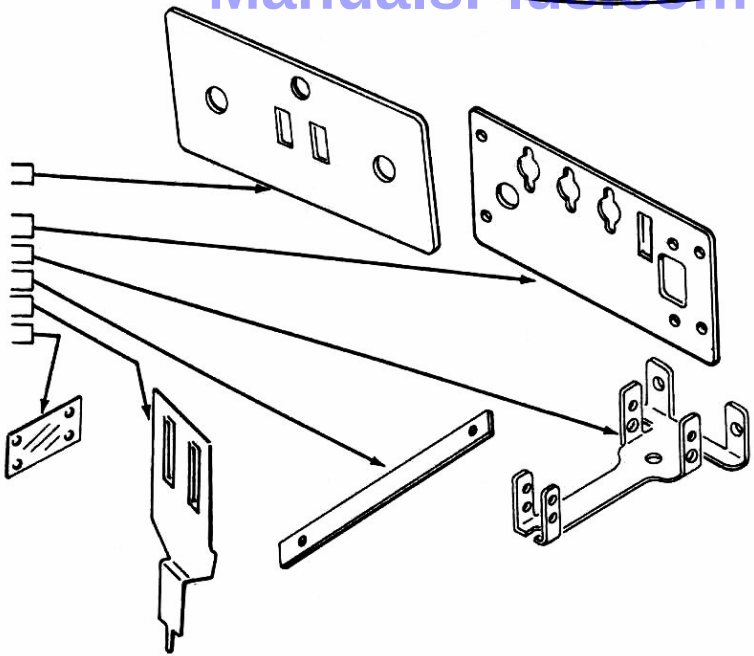

ManualsPlus.com

	QTY.	DESCRIPTION	PART No.	CIRCUIT Component No.
Metal Parts (cont'd.)				
( )	2	Paddle lever	266-843	
( )	1	Lead weight	266-845	
( )	4	Contact plate	469-21	
MISCELLANEOUS				
( )	3	Binding post base	75-17	
( )	4	Cabinet nut	75-61	
( )	1	Small insulator paper 1-3/4" x 2"	75-108	
( )	1	Large insulator paper 3-3/8" x 5-3/8"	75-109	
( )	1	Circuit board	85-1524-2	
( )	4	Plastic foot	261-34	
( )	1	Cam lever	266-844	
( )	1	Cable tie	354-6	
( )	1	Red lens	413-10	
( )	1	Fuseholder	422-1	
( )	1	Terminal collar	431-82	
( )	2	Knob bushing	455-633	
( )	2	Paddle knob	462-931	

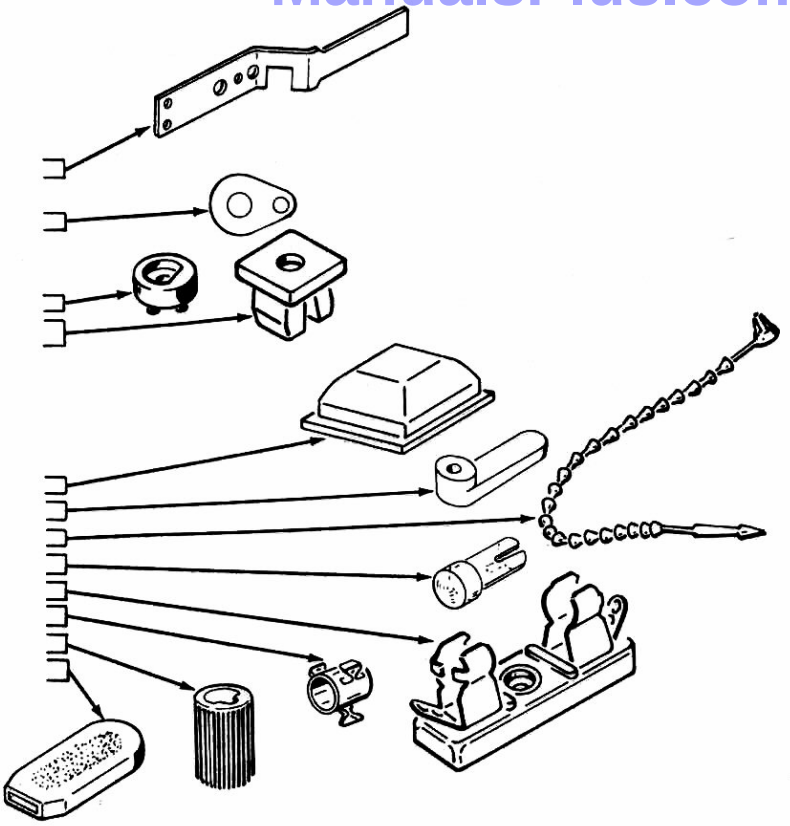

ManualsPlus.com

	QTY.	DESCRIPTION	PART No.	CIRCUIT Component No.
Miscellaneous (cont'd.)				
( )	2	Round knob	462-932	
( )	1	IC lifter	490-111	
( )	1	Nut starter	490-5	
( )	1	Fuse replacement label	390-1255	

NOTE: Be sure you refer to the numbers on the blue and white label in any communications you may have about this kit with Heath Company. You may want to write the model and series numbers in this sample for future reference.

( )	1	Blue and white label	391-34	
( )	1	Parts Order Form	597-260	
( )	1	Kit Builders Guide	597-308	
( )	1	Manual (See front cover for part number.)		
( )		Solder		

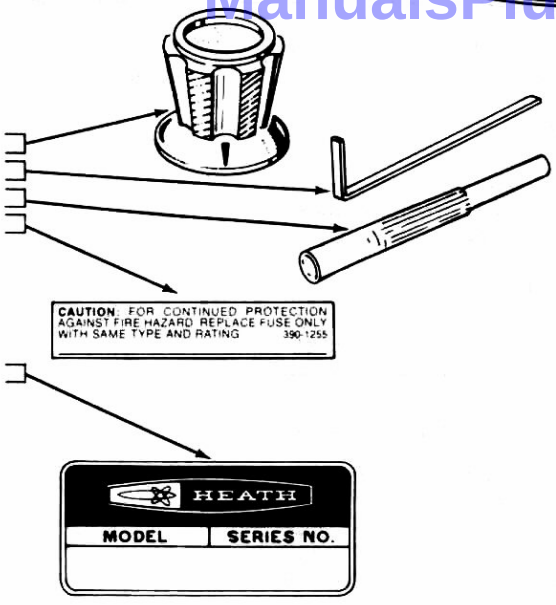

ManualsPlus.com

STEP-BY-STEP ASSEMBLY

Before you start the "Circuit Board Assembly" be sure to read the "Circuit Board Parts Mounting" and "Soldering" sections of the "Kit Builders Guide."

CIRCUIT BOARD ASSEMBLY

Due to the small foil area around circuit board holes at integrated circuit sockets, and the small areas between foils, use the utmost care to prevent solder bridges between these adjacent foil areas. Use only a minimum amount of solder, and do not heat components excessively with the soldering iron. Diodes, transistors, etc., can be damaged if subjected to excessive amounts of heat. Apply the soldering iron only long enough to make a good solder connection.

NOTE: When you solder integrated circuit sockets you will need a small wattage, small-tip soldering iron. If one of these is not available, proceed as follows: Be sure your soldering iron is cool. Then wrap the large bare wire, supplied with this kit, tightly around the soldering iron tip as shown in Figure 1. Allow approximately 1/4" of wire to extend beyond the end of the soldering iron. Cut the wire end to a chisel shape as shown. After the iron is hot, apply solder to the wire windings.

Resistors will be called out by the resistance value (in Ω or kΩ) and color code.

Capacitors will be called out by their capacitance value (in μF) and type (disc, tantalum, or electrolytic).

SAFETY WARNING: Avoid eye injury when you clip off excess leads. We suggest that you wear glasses, or at least clip the leads so the ends will not fly toward your eyes.

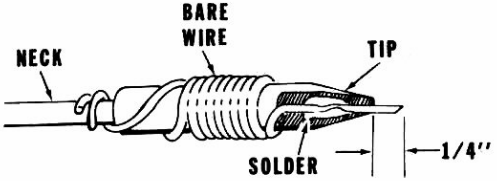

Figure 1

ManualsPlus.com

HEATHKIT

FOR GOOD SOLDER CONNECTIONS, YOU MUST **KEEP THE SOLDERING IRON TIP CLEAN.**

WIPE IT OFTEN WITH A DAMP SPONGE OR CLOTH.

START

Position the circuit board as shown.

NOTE: DIODES MAY BE SUPPLIED IN ANY OF THE FOLLOWING SHAPES. ALWAYS POSITION THE BANDED END AS SHOWN ON THE CIRCUIT BOARD.

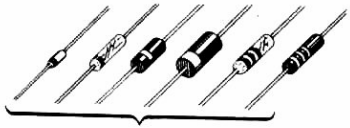

( ) D4 and D5: Two 1N2071 diodes (#57-27).

( ) D7: 1N709A zener diode (#56-58).

( ) D6, 8, 9, 12 and 11: Five 1N4002 diodes (#57-65).

( ) Solder the leads to the foil and cut off the excess lead lengths.

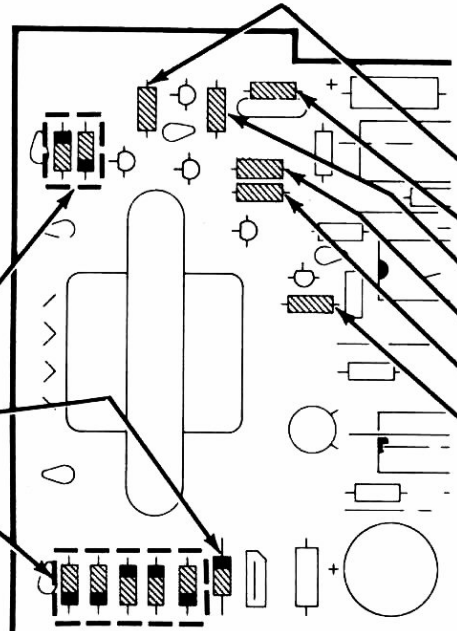

PICTORIAL 1-1

CONTINUE

NOTE: Use 1/4-watt resistors (the smaller resistors) unless directed otherwise.

( ) R27: 1000 Ω (brown-black-red).

( ) R21: 8200 Ω (gray-red-red).

( ) R22: 4700 Ω (yellow-violet-red).

( ) R26: 4700 Ω (yellow-violet-red).

( ) R25: 390 Ω (orange-white-brown).

( ) R24: 4700 Ω (yellow-violet-red).

( ) Solder the leads to the foil and cut off the excess lead lengths.

ManualsPlus.com

START

( ) Remove all the insulation from a 15" length of small brown wire. Cut this wire to the indicated length whenever a step calls for bare wire.

NOTE: Be sure to position each of the following jumper wires as shown.

( ) 1" bare wire.

( ) 3/4" bare wire.

( ) 1" bare wire.

( ) 1" bare wire.

( ) 1" bare wire.

( ) 1" bare wire.

( ) Solder the leads to the foil and cut off the excess lead lengths.

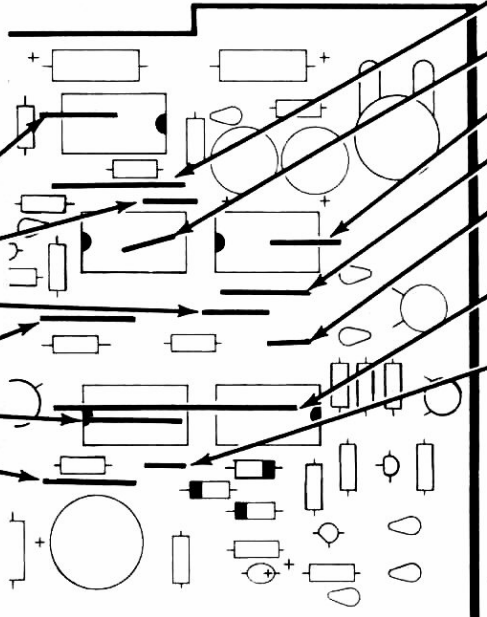

PICTORIAL 1-2

CONTINUE

( ) 1-1/4" bare wire.

( ) 3/4" bare wire.

( ) 1" bare wire.

( ) 1" bare wire.

( ) 3/4" bare wire.

( ) 2-1/4" bare wire. Be sure this wire is positioned over the outline on the circuit board and does not touch the other nearby jumper.

( ) 3/4" bare wire.

( ) Solder the leads to the foil and cut off the excess lead lengths.

ManualsPlus.com

HEATHKIT

START

( ) R19: 470 Ω (yellow-violet-brown).

( ) R3: 390 Ω (orange-white-brown).

( ) R23: 4700 Ω (yellow-violet-red).

( ) R16: 2200 Ω (red-red-red).

( ) R15: 4700 Ω (yellow-violet-red).

( ) R14: 4700 Ω (yellow-violet-red).

( ) R11: 100 Ω (brown-black-brown).

( ) R13: 1000 Ω (brown-black-red).

( ) R28: 220 Ω, 1/2-watt (red-red-brown).

( ) R12: 270 Ω (red-violet-brown).

( ) Solder the leads to the foil and cut off the excess lead lengths.

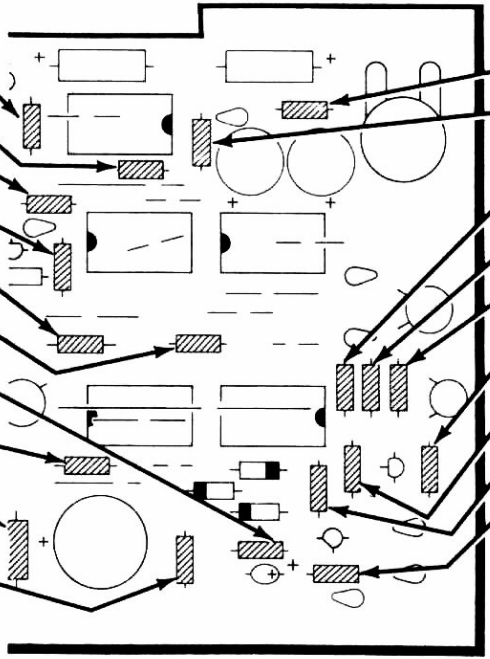

CONTINUE

( ) R18: 150 Ω (brown-green-brown).

( ) R4: 390 Ω (orange-white-brown).

( ) R2: 2200 Ω (red-red-red).

( ) R1: 2200 Ω (red-red-red).

( ) R6: 39 kΩ (orange-white-orange).

( ) R8: 15 kΩ (brown-green-orange).

( ) R5: 100 kΩ (brown-black-yellow).

( ) R7: 22 Ω (red-red-black).

( ) R9: Use 5600 Ω (green-blue-red) for 10 to 60 words-per-minute speed. Use 10 kΩ (brown-black-orange) for 10 to 35 words-per-minute speed. (Disregard the value printed on the circuit board, if any.)

( ) Solder the leads to the foil and cut off the excess lead lengths.

PICTORIAL 1-3

ManualsPlus.com

START

NOTE: In each of the following steps where you install a transistor, line up the flat on the transistor with the flat on the circuit board and insert the transistor leads into their corresponding E, B, and C holes in the circuit board. Solder each transistor as you install it and cut off the excess lead lengths.

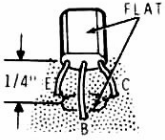

( ) Q7: MPSA42 transistor (#417-294).

( ) Q6: MPSA42 transistor (#417-294).

( ) Q5: MPS-D51 transistor (#417-836).

( ) Q4: MPSA20 transistor (#417-801).

( ) Q1: MPSA20 transistor (#417-801).

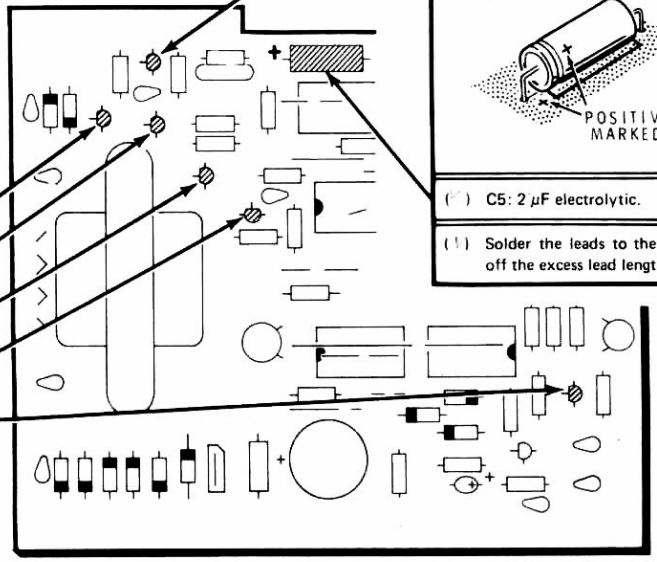

CONTINUE

( ) Q3: MPSA20 transistor (#417-801).

NOTE: When you install electrolytic capacitors, position the positive end as shown on the Pictorial.

( ) C5: 2 μF electrolytic.

( ) Solder the leads to the foil and cut off the excess lead lengths.

PICTORIAL 1-4

ManualsPlus.com

HEATHKIT

START

ALTERNATE LINE VOLTAGE WIRING

Two sets of line voltage wiring instructions are given, one for 120 VAC line voltage and the other for 240 VAC line voltage. In the U.S.A., 120 VAC is most often used, while in foreign countries 240 VAC is more common. USE ONLY THE INSTRUCTIONS THAT AGREE WITH THE LINE VOLTAGE IN YOUR AREA.

120 VAC Wiring

( ) 3/4" bare wire.

( ) 3/4" bare wire.

( ) Solder the wires to the foil and cut off the excess wire lengths.

OR

240 VAC Wiring

( ) 3/4" bare wire. Solder the wire to the foil and cut off the excess wire length.

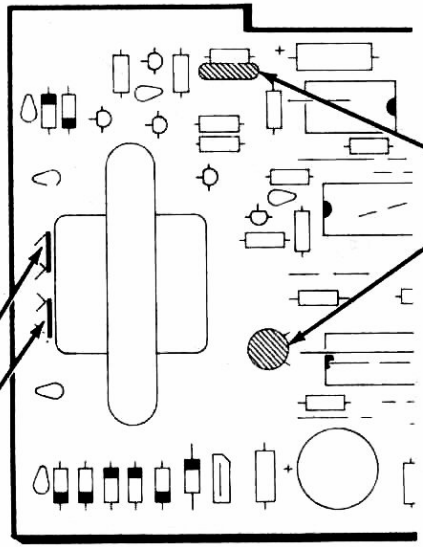

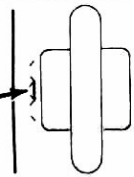

CONTINUE

NOTE: Check the leads of each capacitor as you install it. Remove the coating from each capacitor as shown. This coating could cause a bad solder connection.

( ) C7: .2 μF disc.

( ) C9: .1 μF disc. Position this capacitor down flat against the circuit board as shown.

( ) Solder the leads to the foil and cut off the excess lead lengths.

PICTORIAL 1-5

ManualsPlus.com

START

( ) C6: 2 μF electrolytic. Be sure to match the positive (+) mark on the capacitor with the positive (+) mark on the circuit board.

( ) D1: GD-510 diode (#56-89). Be sure to position the banded end as shown.

( ) D2: GD-510 diode (#56-89).

( ) D3: GD-510 diode (#56-89).

( ) Solder the leads to the foil and cut off the excess lead lengths.

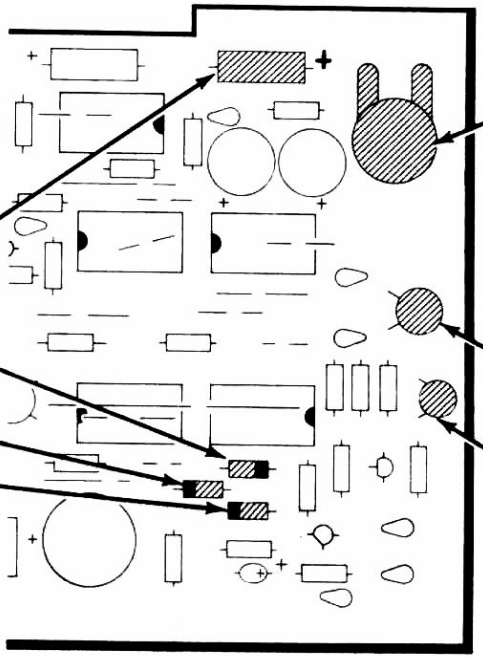

CONTINUE

( ) R17: Install the 750 Ω control (#10-934) as follows. First insert the control lugs; then insert the mounting lugs through the circuit board. Seat the control firmly against the circuit board and solder the lugs to the foil.

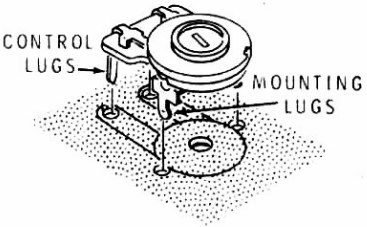

( ) C8: .1 μF disc. Position this capacitor down flat against the circuit board.

( ) C4: .001 μF disc. Position this capacitor down flat against the circuit board.

( ) Solder the leads to the foil and cut off the excess lead lengths.

PICTORIAL 1-6

ManualsPlus.com

START

NOTE: The integrated circuits in this kit have an identification mark on one end. (This identification mark may not look exactly like the identification mark in the illustration.)

( ) 5 IC sockets. Insert the socket pins into the holes. The index mark on the circuit board should still be visible after it is installed. Solder the pins to the foil.

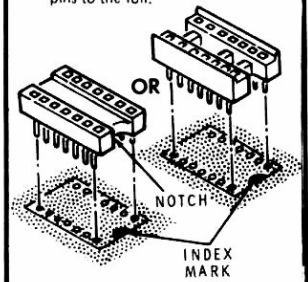

NOTE: An IC lifter has been furnished to remove an IC from its socket if necessary. Push the shorter end of the lifter in between the IC and the socket and rock the longer portion back and forth. Be very careful as the IC pins are very easily bent.

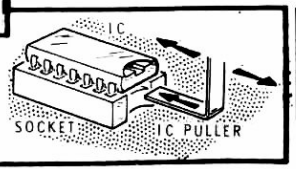

PICTORIAL 1-7

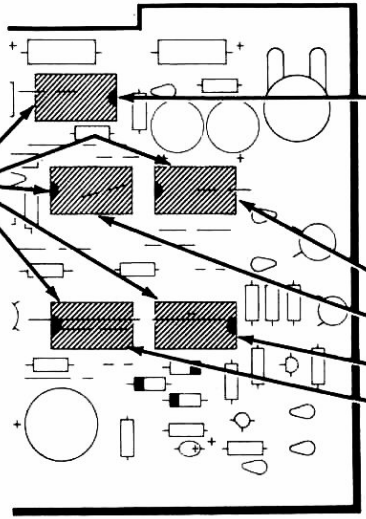

CONTINUE

( ) IC5: 7402 IC (#443-46). Refer to Detail 1-7A. Then position the pin 1 end of this integrated circuit toward the index mark on the circuit board. Then carefully install the integrated circuit. Make sure all the pins are in their respective holes.

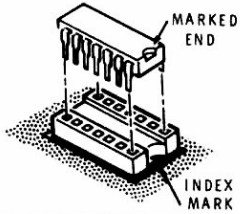

( ) IC2: 7400 IC (#443-1).

( ) IC3: 7410 IC (#443-12).

( ) IC1: 7400 IC (#443-1).

( ) IC4: 7473 IC (#443-5).

Detail 1-7A

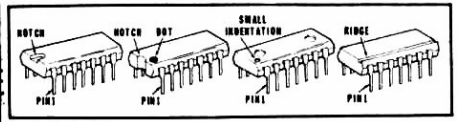

ManualsPlus.com

START

NOTE: Before you install an electrolytic capacitor, look at it and identify the leads. One lead will have a plus (+) mark or a minus (−) mark near it. **Be sure** to install the positive lead in the positive-marked hole. Be careful; only the negative lead may be marked.

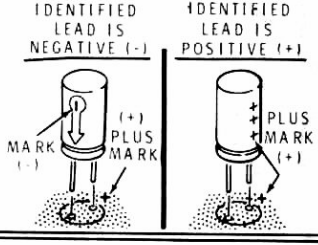

( ) C2: 22 μF electrolytic.

( ) C1: 22 μF electrolytic.

( ) C3: 2.2 μF electrolytic.

( ) C11: 1000 μF electrolytic.

( ) Solder the leads to the foil and cut off the excess lead lengths.

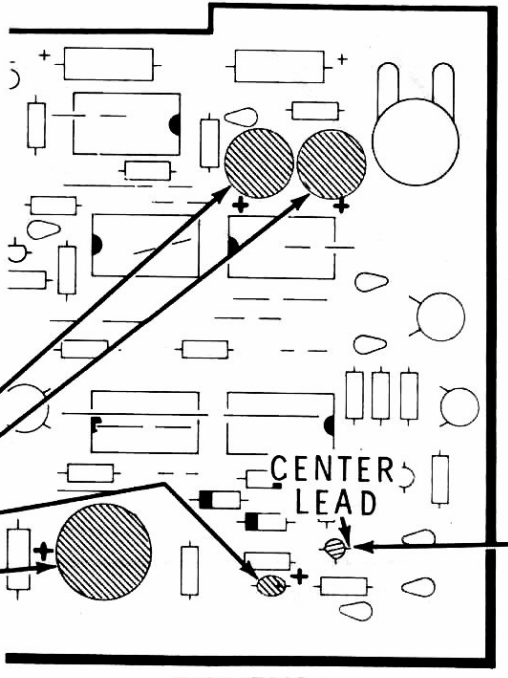

PICTORIAL 1-8

CONTINUE

NOTE: To install the transistor in the next step, first bend the center lead away from the flat side of the transistor. Install the transistor as shown. Be sure to insert the center lead in the hole marked C on the circuit board. NOTE: The flat on the transistor will be turned slightly from the flat on the board, as shown.

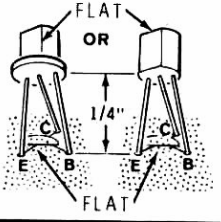

( ) Q2: X29A829 transistor (#417-201).

( ) Solder the leads to the foil and cut off the excess lead lengths.

ManualsPlus.com

START

NOTE: When you are instructed to install a wire, as in the next step, use the small brown wire unless otherwise directed. Cut the wire to the indicated length and remove 1/4" of insulation from each end. Solder each wire as it is installed. The free end of each wire will be connected later.

( ) 3-1/2" wire at J.

( ) 5-1/2" wire at H.

( ) 3-1/2" wire at G.

( ) 5-3/4" wire at F.

( ) 2-3/4" wire at A.

( ) 2-1/2" wire at B.

( ) 2-5/8" wire at D. Remove an additional 1/4" of insulation from the free end of this wire.

( ) 2-1/2" wire at C.

( ) 1-1/4" wire at E.

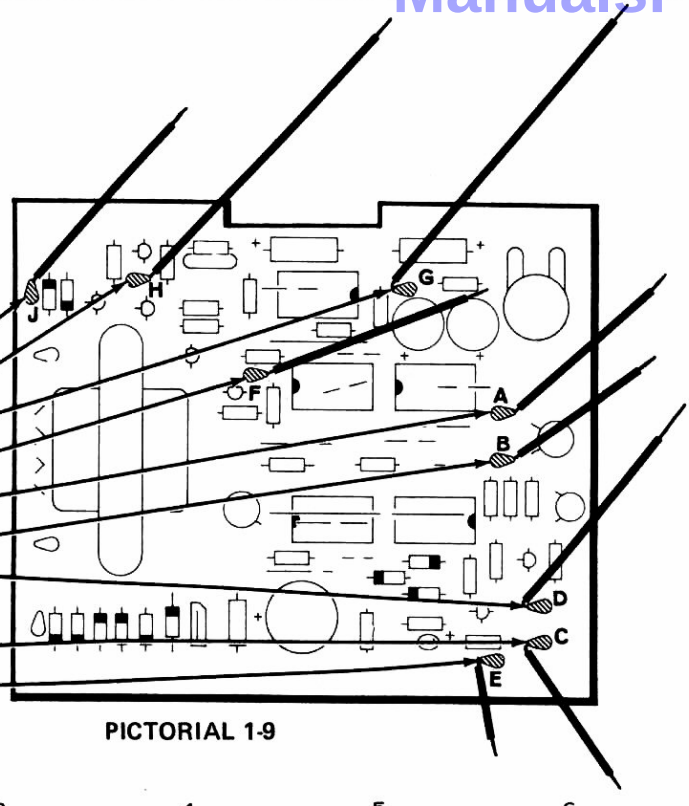

PICTORIAL 1-9

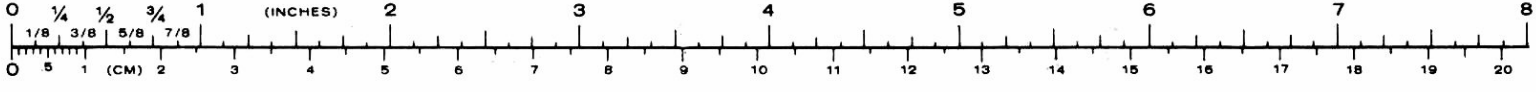

ManualsPlus.com

START

(✓) 5-3/4" large brown wire at hole L.

(✓) 1-3/4" large brown wire at hole M.

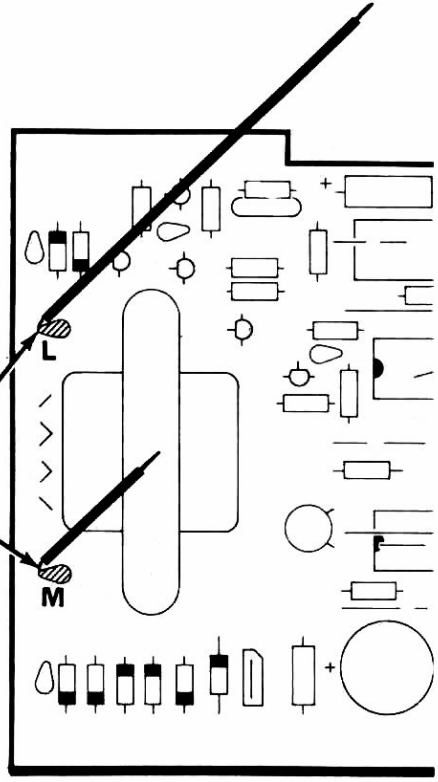

PICTORIAL 1-10

CONTINUE

CIRCUIT BOARD CHECKOUT

Carefully inspect the circuit board for the following conditions.

( ) Unsoldered connections.

( ) "Cold" solder connections.

( ) Solder bridges between foil patterns.

( ) Protruding leads which could touch together.

( ) Integrated circuits for the proper type and installation.

( ) Transistors for proper type and installation.

( ) Electrolytic capacitors for the correct position of the positive (+) end.

( ) Diodes for the correct position of the banded end.

Set the circuit board aside until called for.

FINISH

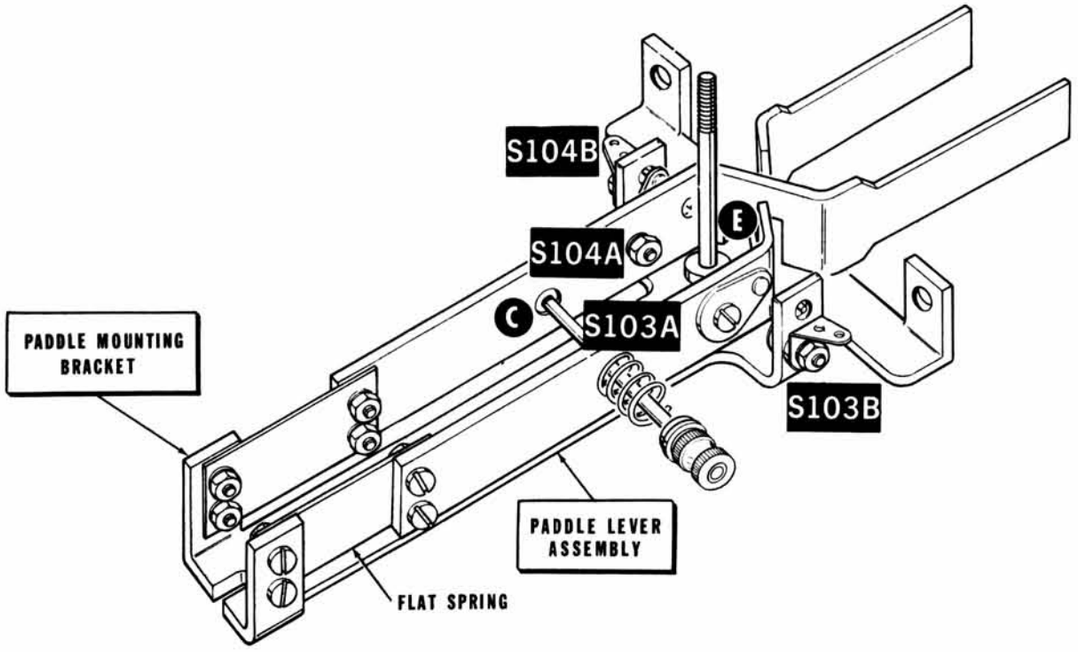

PICTORIAL 2-1

ManualsPlus.com

PADDLE ASSEMBLY

Refer to Pictorial 2-1 (fold-out from this Page) for the following steps).

( ) Locate the four rivets and the four contact plates. Use the eraser on a pencil to clean the contact plates around the small hole. This will make them easier to solder.

( ) Refer to Detail 2-1A and solder a rivet to each of the four contact plates. Use a minimum amount of solder. Lay a pair of pliers on the contact plate to help hold it while you solder.

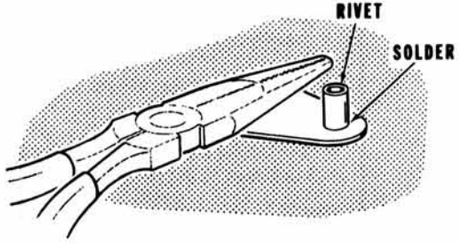

Detail 2-1A

NOTE: The Heath Company has provided a plastic nut starter with this kit. Use the nut starter to hold and start 6-32 and 4-40 nuts.

( ) Refer to Detail 2-1B and mount a contact plate assembly to the paddle mounting bracket at S104B with a 4-40 x 5/16" screw, two shoulder washers, a #4 solder lug, and a 4-40 nut. Be sure the rivet is centered in the hole and does not touch the bracket.

( ) Similarly, mount a contact plate assembly at S103B.

NOTE: When hardware is called for in a step, only the screw size will be given. For instance, if 4-40 x 1/4" hardware is called for, it means that you will use a 4-40 x 1/4" screw, one or more #4 lockwashers, and a 4-40 nut. The Detail referred to in the step will show the proper number of lockwashers to use and where to position them.

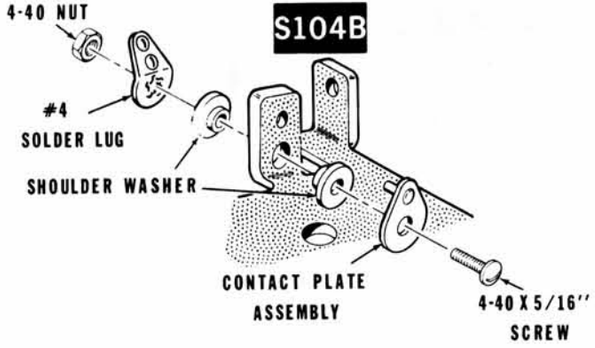

Detail 2-1B

ManualsPlus.com

Refer to Detail 2-1C for the next two steps.

( ) Position a paddle lever with the cutout upward and mount a contact plate assembly to the paddle lever at S103A with 4-40 x 1/4" hardware.

( ) Mount a flat spring to the paddle lever with 4-40 x 1/4" hardware.

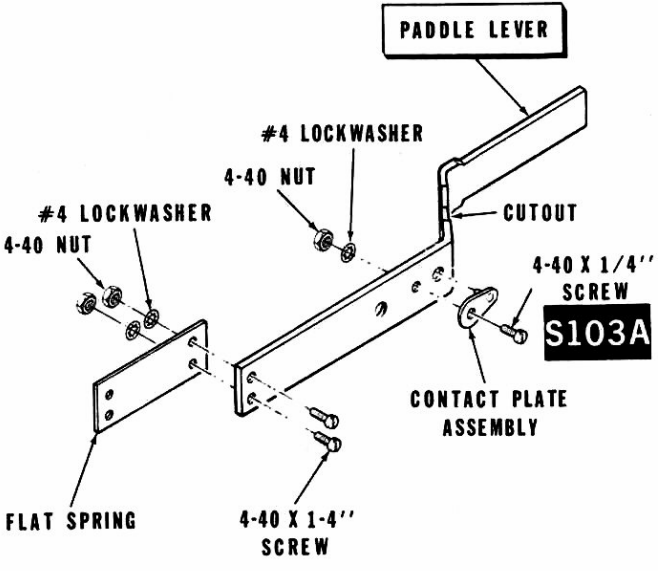

Detail 2-1C

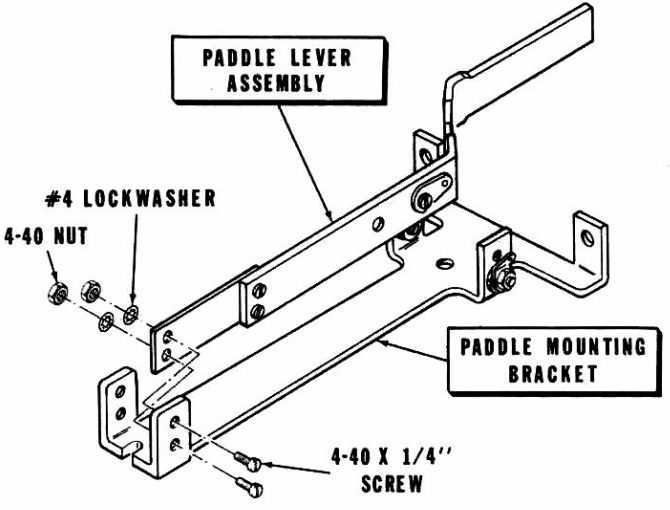

Detail 2-1D

( ) Refer to Detail 2-1D and mount the paddle lever assembly to the paddle mounting bracket with 4-40 x 1/4" hardware. Be sure the rivets at S103A and S103B line up, and the paddle lever is parallel to the paddle mounting bracket before you tighten the hardware.

ManualsPlus.com

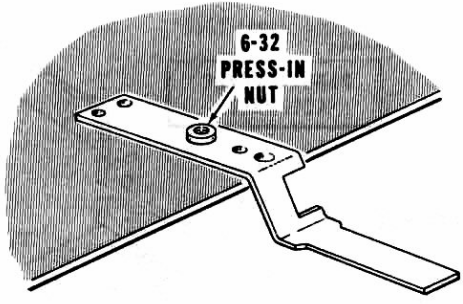

Detail 2-1E

( ) Refer to Detail 2-1E and insert the press-in nut into the remaining paddle lever in the following manner:

1. Place the paddle lever on a vise or other hard surface as shown.

2. Place the press-in nut, ridged side down, above and in line with the indicated hole in the paddle lever.

3. Tap the press-in nut firmly with a hammer until the press-in nut is completely seated.

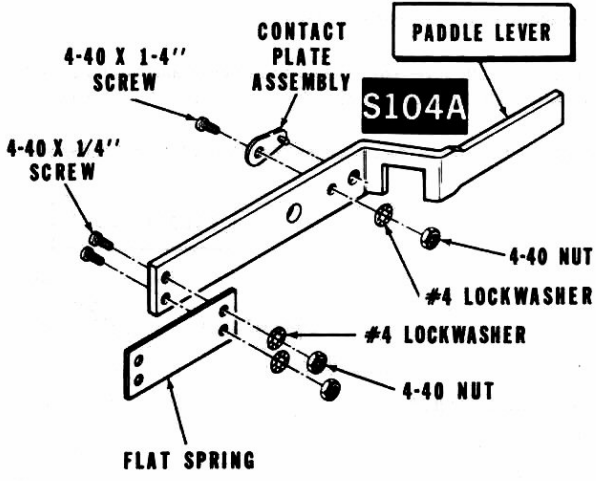

Detail 2-1F

Refer to Detail 2-1F for the next two steps.

( ) Mount the remaining contact plate assembly to the paddle lever at S104A with 4-40 x 1/4" hardware.

( ) Mount a flat spring to the paddle lever with 4-40 x 1/4" hardware.

ManualsPlus.com

( ) Refer to Detail 2-1G and mount the paddle lever assembly to the paddle mounting bracket with 4-40 x 1/4" hardware. Be sure the rivets at S104A and S104B line up and the paddle lever is parallel to the paddle mounting bracket and is even with the other paddle lever before you tighten the hardware.

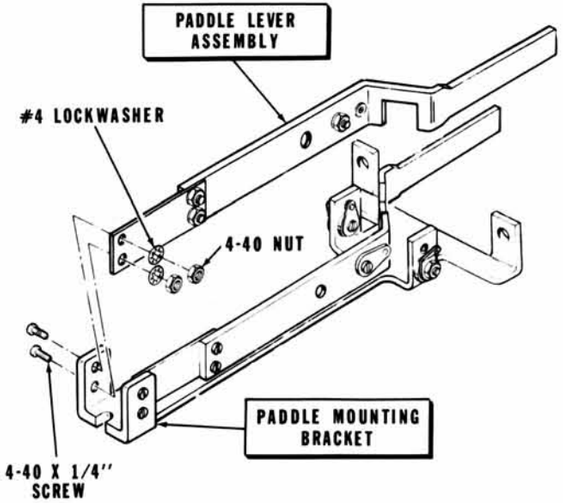

Detail 2-1G

Refer to Detail 2-1H (fold-out from this page) for the following steps.

( ) Mount a 6-32 x 1-9/16" stud at E with a #6 lockwasher, a #6 metal flat washer, and a 6-32 nut. Tighten the nut only finger tight at this time.

( ) Fasten a #6 metal flat washer onto the short end of the other 6-32 x 1-9/16" stud with a #6 lockwasher and a 6-32 thumbnut as shown in the inset drawing.

( ) Place the wire spring onto the long end of the stud; then start the threaded end of the stud into the press-in nut at C on the paddle lever for a few turns.

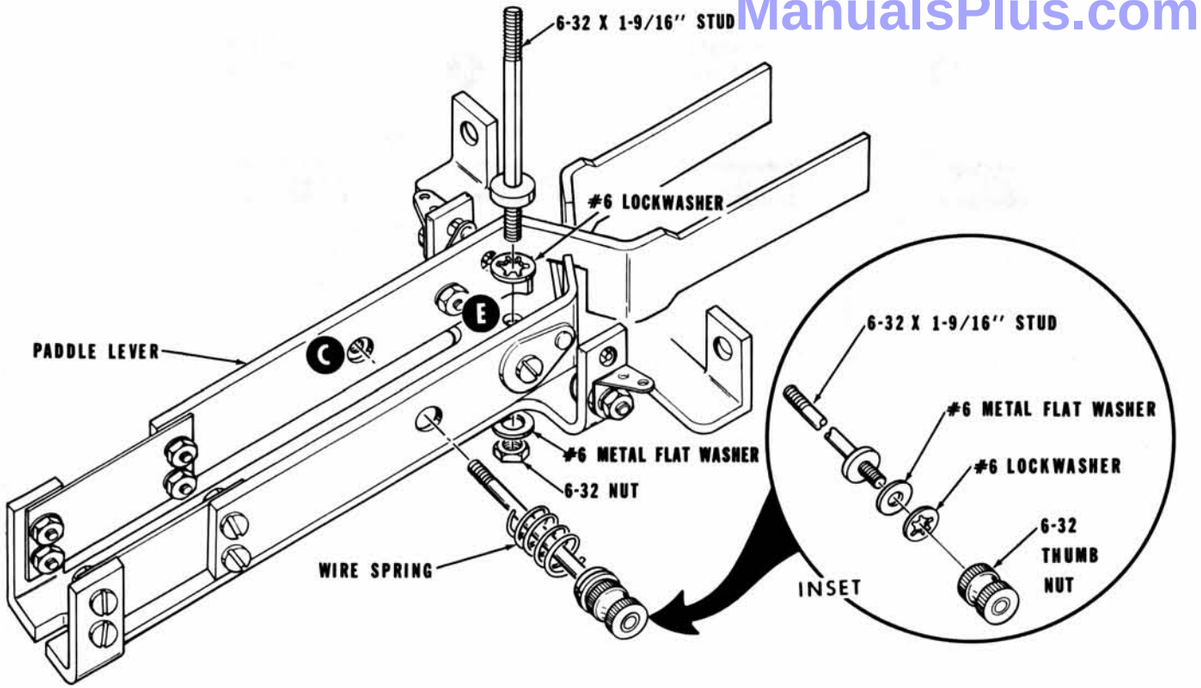

Detail 2-1H

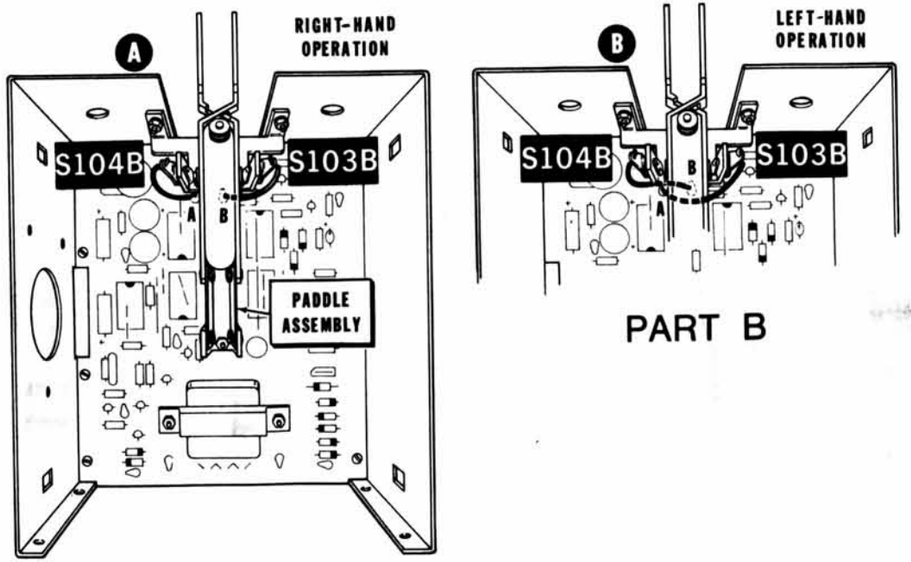

PART A

PART B

PICTORIAL 3-1

ManualsPlus.com

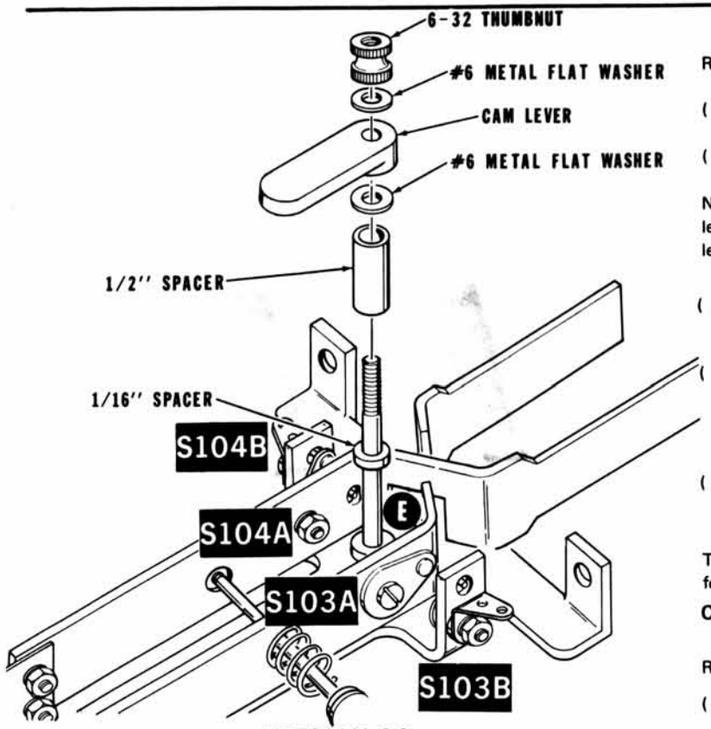

PICTORIAL 2-2

Refer to Pictorial 2-2 for the following steps.

( ) Place a 1/16" spacer and a 1/2" spacer on the stud at E.

( ) Place a #6 metal flat washer on the stud.

NOTE: When you perform the next step, squeeze the free ends of the paddle levers together slightly so you can position the cam-shaped portion of the cam lever between the paddle levers.

( ) Mount the cam lever on the stud with a #6 metal flat washer and a 6-32 thumbnut. Position the cam lever as shown.

( ) Turn the cam lever counterclockwise until the rivets on either or both sides of the paddle levers touch. If the rivets on both sides do not touch at exactly the same time, move the 6-32 x 1-9/16" stud until they do. Then tighten the nut that holds the stud to the paddle mounting bracket.

( ) As a fine adjustment, use a screwdriver blade to bend the contact plate at either S103B or S104B away from the paddle mounting bracket as necessary.

This completes the assembly of the paddle assembly. Set aside until it is called for.

CHASSIS ASSEMBLY

Refer to Pictorial 3-1 (fold-out from Page 30) for the following steps.

( ) Locate the circuit board you set aside earlier and position the wires toward the outline of the power transformer.

ManualsPlus.com

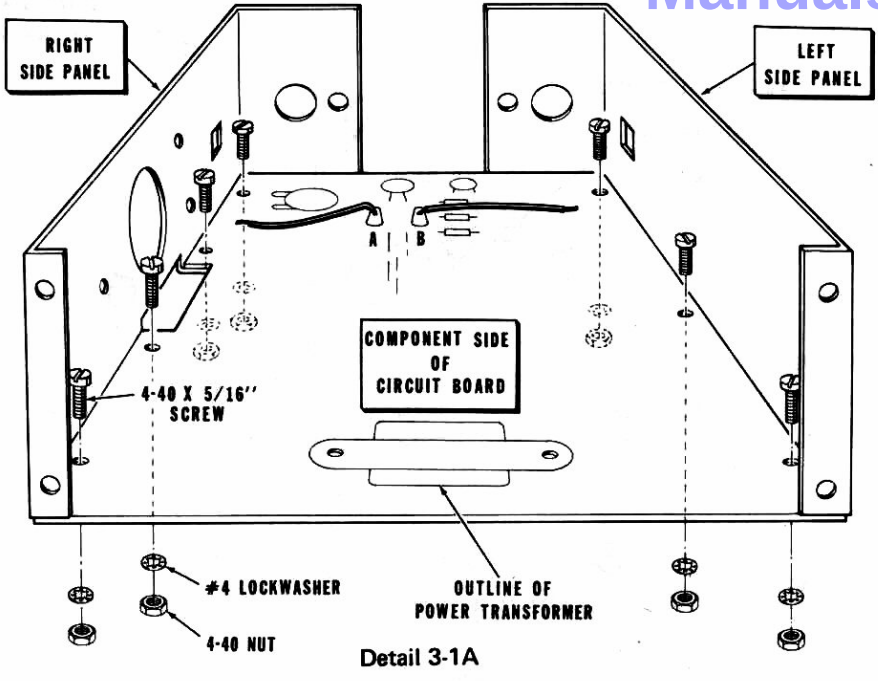

Detail 3-1A

Refer to Detail 3-1A for the following steps.

( ) Mount the right side panel to the circuit board at the four locations shown with 4-40 x 5/16" hardware.

( ) Mount the left side panel to the circuit board at the three locations shown with 4-40 x 5/16" hardware.

( ) If you wish to wire the Keyer for right-hand operation, position the wires coming from holes A and B so they can be connected as shown in Part A of Pictorial 3-1. If you wish to wire the Keyer for left-hand operation, position the wires so they can be connected as shown in Part B of the Pictorial.

ManualsPlus.com

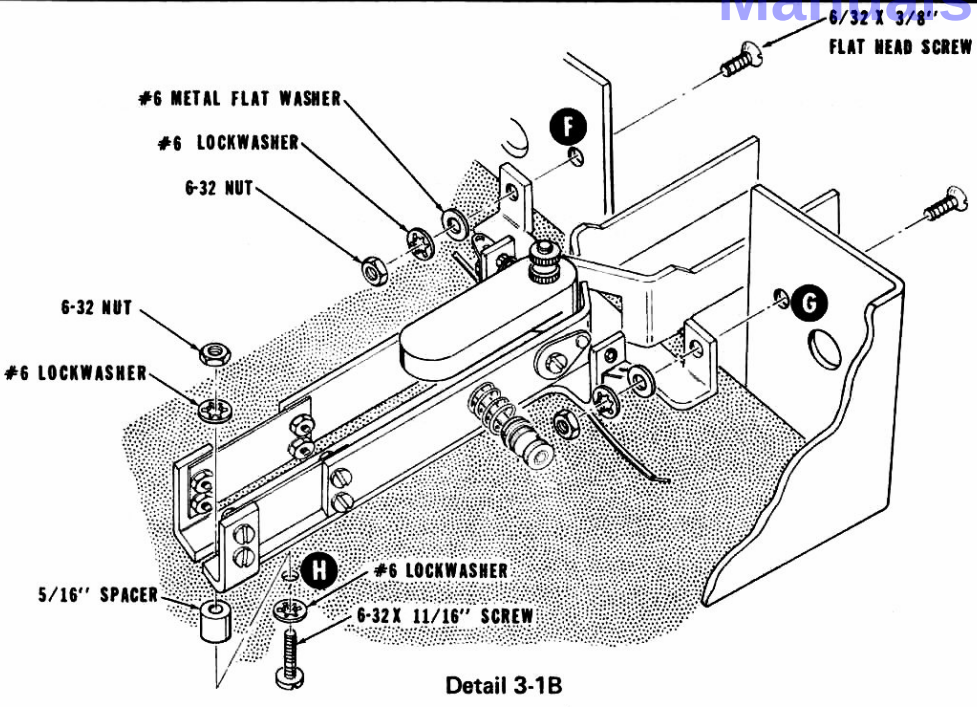

Detail 3-1B

( ) Refer to Detail 3-1B and loosely mount the paddle assembly to the side panels at F and G with a 6-32 x 3/8" flat head screw, a #6 metal flat washer, a #6 lockwasher, and a 6-32 nut at each location.

( ) Again refer to Detail 3-1B and loosely mount the paddle assembly to the circuit board at H with a 6-32 x 11/16" screw, a 5/16" spacer, two #6 lockwashers, and a 6-32 nut.

( ) Turn the Keyer upside down on a flat surface. Then tighten the hardware at G and F. Now tighten the hardware at H.

ManualsPlus.com

( ) T1: Refer to Detail 3-1C and mount the power transformer to the circuit board with a 6-32 x 3/8" screw, a fiber flat washer, a #6 metal flat washer, a #6 lockwasher, and a 6-32 nut at each mounting foot.

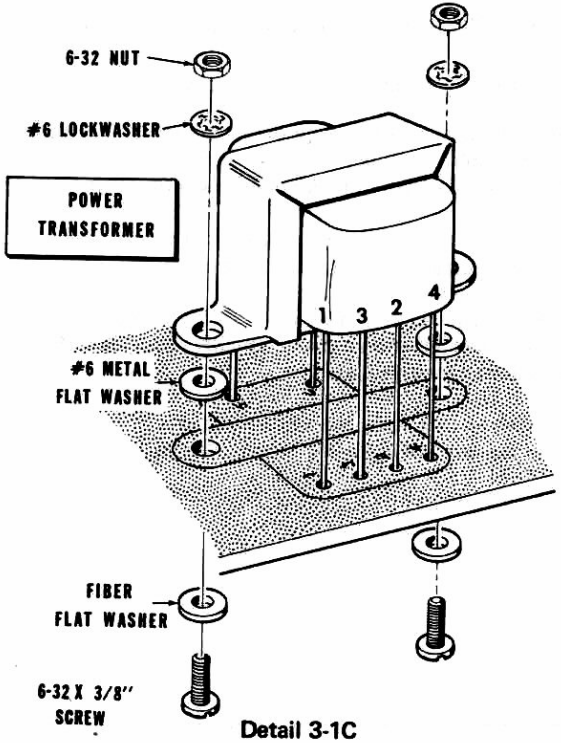

Detail 3-1C

( ) Solder the transformer leads to the foil and cut off the excess lead lengths.

PADDLE WIRING

NOTES:

1. In the following steps, (NS) means not to solder because other wires will be added later. "S-" with a number, such as (S-3), means to solder the connection. The number after the "S" tells how many wires are at the connection. Position each wire or component as shown in the Pictorial.

2. The following steps are in two specific groups. One group is for right-hand operation, and the other group is for left-hand operation. Use the group of steps for the desired type of operation you want.

Right-Hand Operation

Refer to Pictorial 3-1, Part A (fold-out from Page 30) for the following steps.

( ) Connect the wire that extends from circuit board hole A to the solder lug at S104B on the paddle assembly (S-1).

( ) Connect the wire that extends from circuit board hole B to the solder lug at S103B on the paddle assembly (S-1).

ManualsPlus.com

Left-Hand Operation

Refer to Pictorial 3-1, Part B for the following steps.

( ) Connect the wire that extends from circuit board hole A to the solder lug at S103B on the paddle assembly (S-1).

( ) Connect the wire that extends from circuit board hole B to the solder lug at S104B on the paddle assembly (S-1).

FRONT PANEL ASSEMBLY

NOTE: When you connect wires from one point to another, in the following steps, position each wire as shown in the associated Pictorial. You may also wish to refer to the "Chassis Photograph" on Page 67.

Refer to Pictorial 4-1 (fold-out from Page 39) for the following steps.

( ) Refer to Detail 4-1A and mount the red lens in hole A in the front panel with a push-on nut.

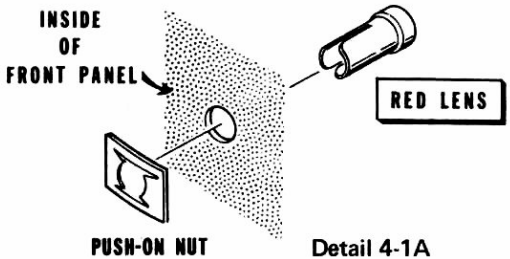

Detail 4-1A

Refer to Detail 4-1B for the following six steps. The Detail is divided into five parts, and each step refers to the pertinent part of the Detail.

( ) Refer to Part 1 and cut the leads of the neon lamp to 3/4".

( ) PL1: Refer to Part 2 and insert the lamp as far as it will go into the lens.

( ) Position the terminal collar as shown in the Part 3. Pull the indicated lug out of the collar. Then push the collar onto the lens until the ends of the collar and lens are flush with each other as shown in Part 4.

( ) Refer to Part 4 and connect one lamp lead to the terminal collar lug 1 (NS) and the other lamp lead to lug 2 (NS).

( ) R103: Cut both leads of a 33 kΩ, 1/2-watt (orange-orange-orange) to 3/4". Connect either lead to the terminal collar lug 1 (S-2). The other lead will be connected later.

( ) Again refer to Part 5 and connect one end of a 7" length of large brown wire to the terminal collar lug 2 (S-2). The free end will be connected later.

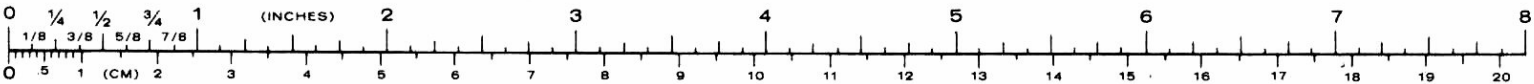

ManualsPlus.com

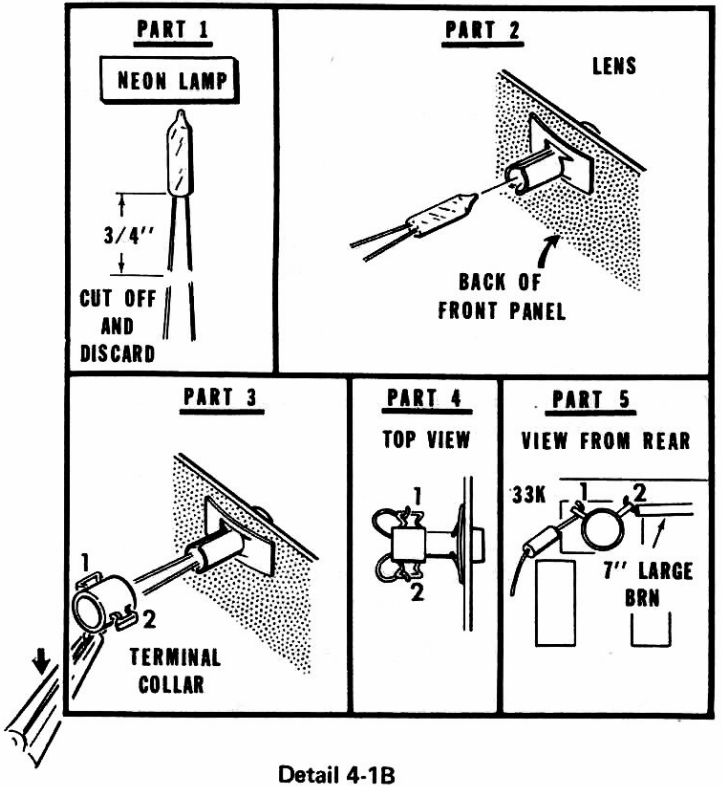

Detail 4-1B

( ) Refer to Detail 4-1C and cut a notch in a 1" length of clear sleeving.

( ) Position the 33 kΩ resistor and the 7" brown wire through the notch in the sleeving and out the opposite ends as shown in Detail 4-1D. Then slide it over the terminal collar as shown in the Pictorial.

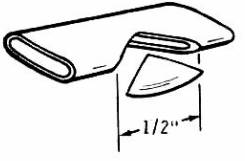

Detail 4-1C

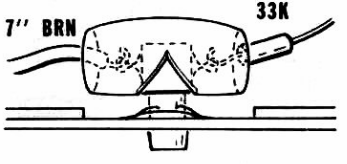

Detail 4-1D

ManualsPlus.com

( ) R102/S102A/S102B: Refer to Detail 4-1E and mount the front panel to the right side panel with the 100 Ω control (#19-703). Use a control lockwasher, a control flat washer, and a control nut. Position the control lugs as shown in the Pictorial and tighten the nut finger tight.

( ) R101/S101: Similarly mount the 50 kΩ control (#19-704) to the left side panel and the front panel. Now tighten both control nuts securely.

( ) Connect the free end of the wire coming from hole C in the circuit board to control R101 lug 3 (S-1).

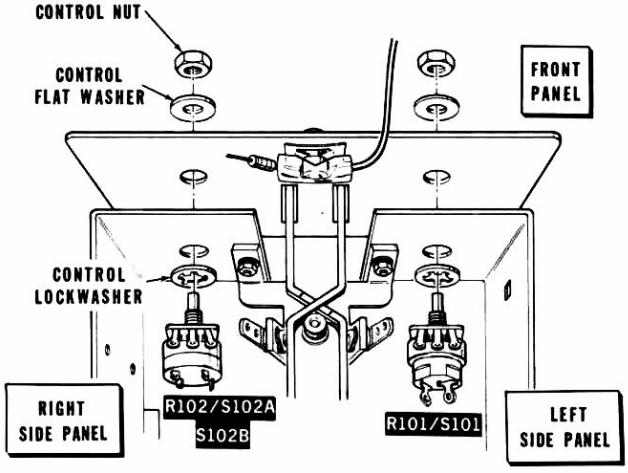

Detail 4-1E

NOTE: When a wire passes through a terminal it will count as two wires, one entering the connection and one leaving the connection.

( ) Connect the free end of the wire coming from circuit board hole D through control R101 lug 1 (S-2) to lug 2 (S-1).

( ) Connect the free end of the wire coming from hole E in the circuit board to switch S101 lug 2 (S-1).

( ) Connect one end of a 7-1/4" length of small brown wire to switch S101 lug 1 (S-1). The free end will be connected later.

( ) Connect the free end of the wire coming from circuit board hole H to control R102 lug 3 (S-1).

( ) Connect the free end of the wire coming from circuit board hole G to control R102 lug 1 (NS).

( ) Connect one end of a 2-3/8" length small brown wire to control R102 lug 1 (S-2). The free end will be connected later.

( ) Prepare two 9-1/4" lengths of small brown wire. Connect either wire to switch S102B lug 1 (S-1). Connect the other wire to switch S102B lug 2 (S-1). Be sure you use the two lugs closest to the circuit board.

( ) Twist together the two 9-1/4" wires. Leave 3" at the free end untwisted.

( ) At the other end of the twisted pair, connect either wire to hole K (S-1) in the circuit board. The other wire will be connected later.

ManualsPlus.com

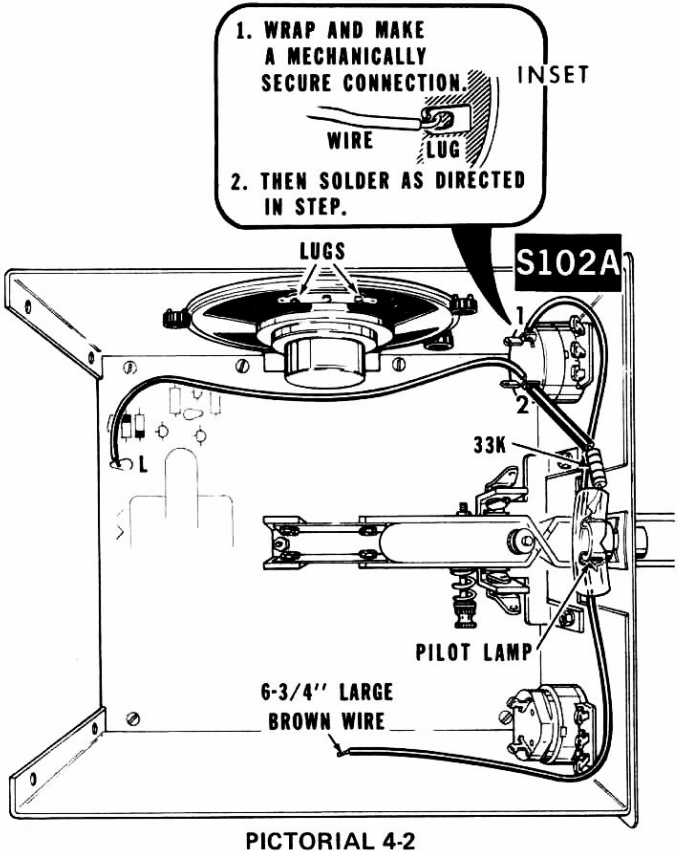

PICTORIAL 4-2

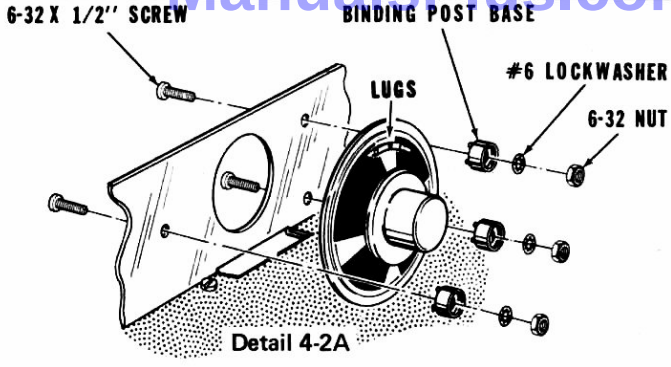

Detail 4-2A

Refer to Pictorial 4-2 for the following steps.

( ) Refer to Detail 4-2A and mount the speaker to the right side panel with a binding post base and 6-32 x 1/2" hardware at each of the three locations. Position the lugs as shown. Be sure no wires are pinched between the speaker and the side panel. Center the speaker over the hole in the side panel before you tighten the hardware.

NOTE: When you are instructed to "make a mechanically secure connection," as in the next two steps, refer to the inset drawing on Pictorial 4-2.

( ) Connect one end of a 6-3/4" large brown wire to switch S102A lug 1 (S-1). Route the wire under the pilot lamp as shown. The free end will be connected later. Make a mechanically secure connection.

( ) Connect the free end of the wire that extends from hole L in the circuit board to switch S102A lug 2 (NS). Make a mechanically secure connection.

( ) Place a 1/2" length of small sleeving onto the free lead of the 33 kΩ resistor and connect this lead to switch S102A lug 2 (S-2).

ManualsPlus.com

REAR PANEL ASSEMBLY

Refer to Pictorial 5-1 for the following steps.

NOTE: Before you mount each of the following phono sockets, scrape or sand any excess paint from around the mounting holes as shown in Detail 5-1A. Position each socket as shown in the Pictorial.

( ) Refer to Detail 5-1A and mount a phono socket at J with 6-32 x 3/8" hardware.

( ) Similarly mount another phono socket at K.

( ) Similarly mount the remaining phono socket at L.

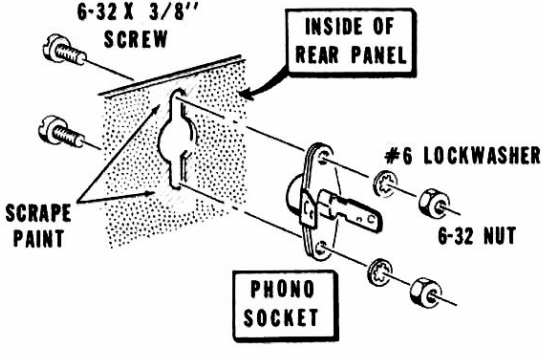

Detail 5-1A

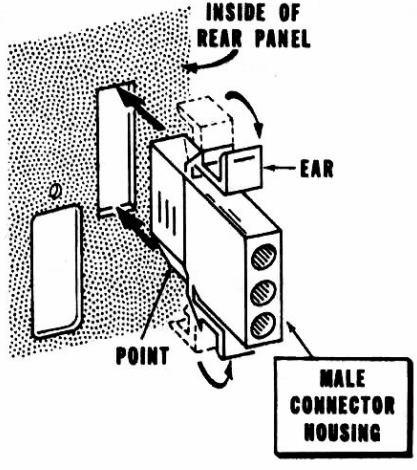

Detail 5-1B

( ) Refer to Detail 5-1B and bend the ears of the male connector housing back against the side of the housing body as shown. Position the pointed side of the housing downward as shown. Then firmly push the housing from the inside of the rear panel toward the outside. The ears of the housing will lock in place on the edges of hole N.

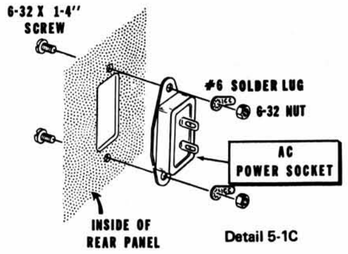

Detail 5-1C

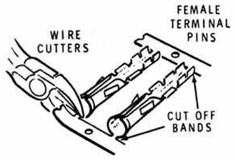

Detail 5-1D

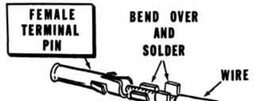

Detail 5-1E

( ) Refer to Detail 5-1C and mount the AC power socket at P as shown. Use two 6-32 × 1/4" screws, two #6 solder lugs, and two 6-32 nuts. Be sure to position the solder lugs as shown in the Pictorial.

NOTE: Be sure you use the large .005 μF capacitors (#21-72) in the next two steps.

( ) C102: Connect a .005 μF 1400V (1.4kV) disc capacitor from AC socket P lug 1 (NS) to solder lug S (S-1).

( ) C104: Connect a .005 μF 1400V (1.4kV) disc capacitor from AC socket P lug 2 (NS) to solder lug T (S-1).

( ) Refer to Detail 5-1D and cut the two supporting bands from the strip of two female terminal pins.

( ) Prepare a 1-1/2" length of small brown wire.

( ) Refer to Detail 5-1E and solder a female terminal pin on the end of the 1-1/2" small brown wire.

( ) Connect the free end of the wire to phono socket L lug 2 (S-1). Then push the terminal pin into hole 1 of the housing until it locks.

( ) C103: Connect a .005 μF disc capacitor between phono socket K lugs 1 (NS) and 2 (S-1).

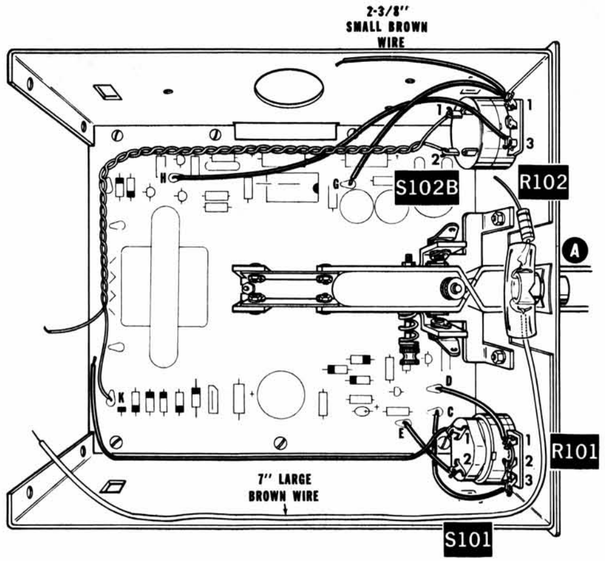

PICTORIAL 4-1

ManualsPlus.com

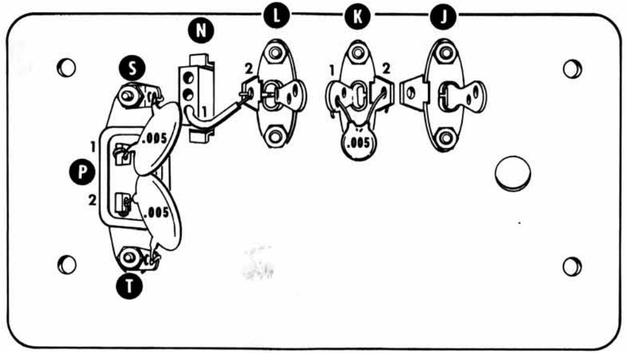

PICTORIAL 5-1

ManualsPlus.com

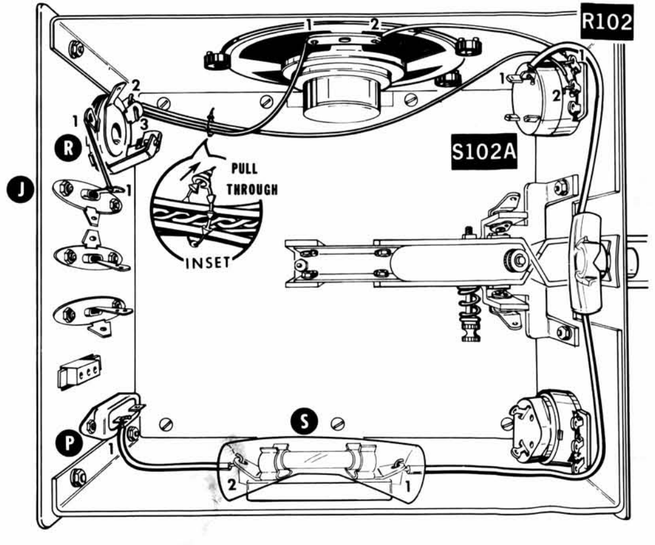

PICTORIAL 6-1

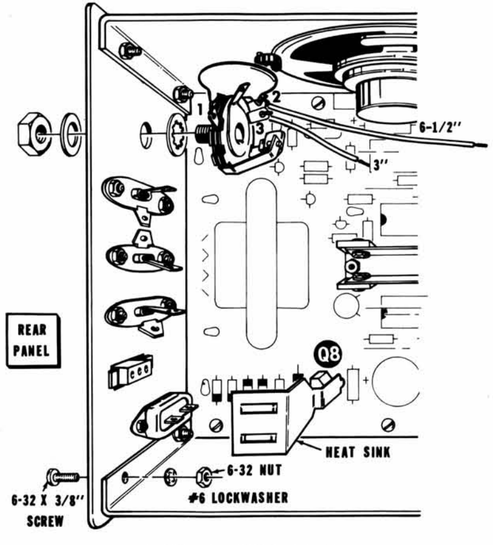

PICTORIAL 5-3

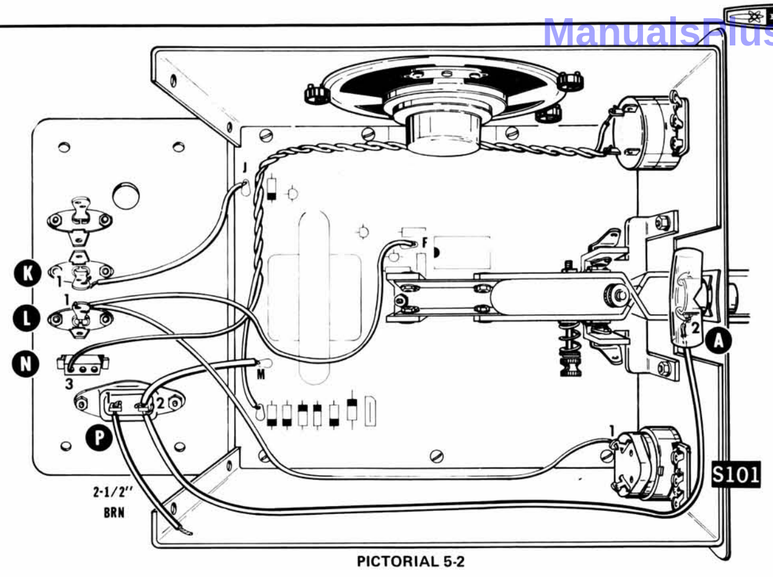

PICTORIAL 5-2

ManualsPlus.com

Refer to Pictorial 5-2 for the following steps.

( ) Position the rear panel assembly near the chassis as shown and connect the wire coming from switch S101 lug 1 to phono socket L lug 1 (NS).

( ) Solder the remaining female terminal pin to the free end of the wire that extends from the twisted pair. Then push this pin into hole 3 of the housing until it locks.

( ) Connect the free end of the wire coming from circuit board hole M to AC socket P lug 2 (NS). Make a mechanically secure connection.

( ) Connect the free end of the wire coming from the pilot lamp terminal collar lug 2 to AC socket P lug 2 (S-3). Make a mechanically secure connection.

( ) Connect a 2-1/2" length of large brown wire to AC socket P lug 1 (S-2). The free end will be connect later.

( ) Connect the free end of the wire coming from circuit board hole F to phono socket L lug 1 (S-2). Route this wire around the transformer as shown in the Pictorial.

( ) Connect the free end of the wire coming from circuit board hole J to phono socket K lug 1 (S-2).

Refer to Pictorial 5-3 (fold-out from Page 40) for the following steps.

( ) Mount the rear panel to the side panels with 6-32 x 3/8" hardware at each hole.

( ) C101: Cut each lead of the remaining .2 μF disc capacitor to 1/2". Then connect this capacitor between the phone jack lugs 1 (NS) and 2 (NS). Position the capacitor as shown.

( ) Connect one end of a 6-1/2" length of small brown wire to the phone jack lug 2 (S-2). The free end will be connected later.

( ) Connect one end of a 3" length of small brown wire to the phone jack lug 3 (S-1). The free end will be connected later.

( ) Mount the phone jack to the rear panel at R with a control lockwasher, a control flat washer, and a control nut. Position the lugs as shown.

( ) Refer to Detail 5-3A and bend the heat sink 3/4" from the end as shown.

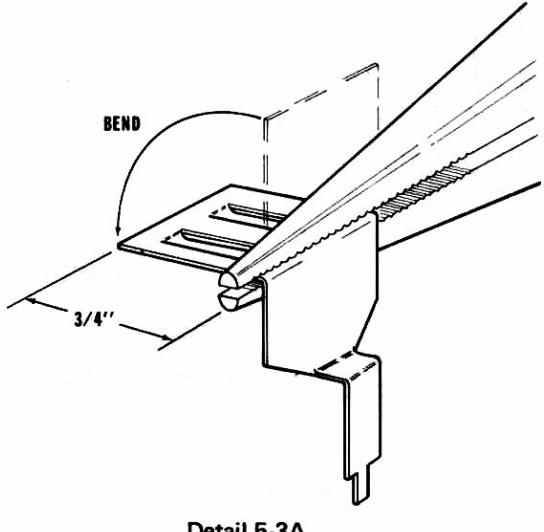

Detail 5-3A

ManualsPlus.com

( ) Refer to Detail 5-3B and install the heat sink onto a D40C1 transistor (#417-272). Be sure to position the bevel on the transistor as shown. Push the heat sink down onto the transistor as far as possible.

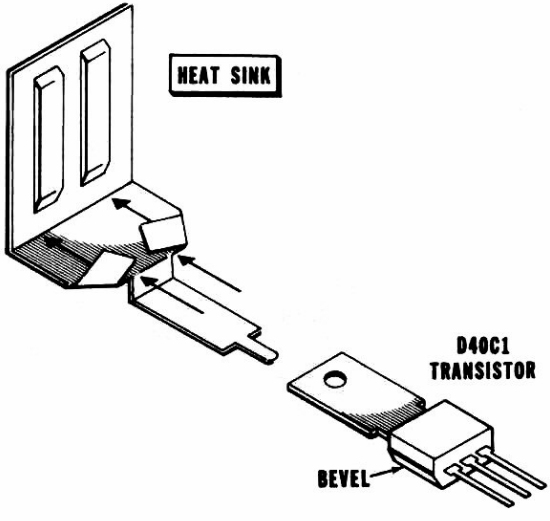

Detail 5-3B

( ) Q8: Refer to Detail 5-3C and install the transistor-heat sink assembly as shown. Match the bevel on the transistor with the bevel outline on the circuit board. Solder the leads and the heat sink tab to the foil and cut off the excess lead lengths.

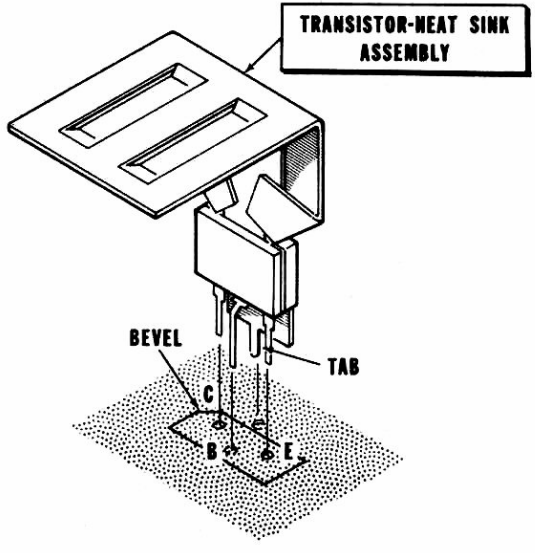

Detail 5-3C

ManualsPlus.com

FINAL WIRING

Refer to Pictorial 6-1 (fold-out from Page 40) for the following steps.

( ) Connect the free end of the wire coming from lug 2 on the phone jack to control R102 lug 2 (S-1).

( ) Connect the free end of the wire coming from the phone jack lug 3 to the speaker lug 1 (S-1).

( ) Remove all the insulation from a 1-1/4" length of small brown wire and connect this wire from phono socket J lug 1 (S-1) to the phone jack lug 1 (S-2).

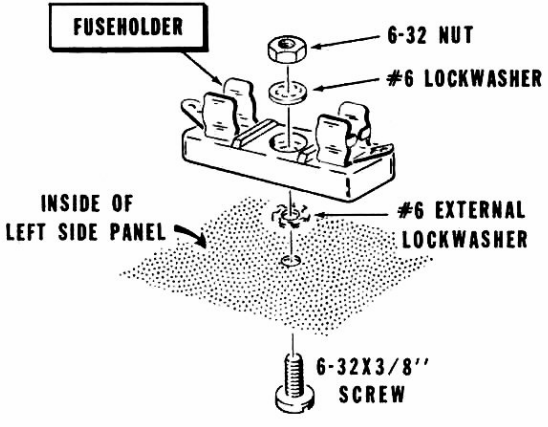

Detail 6-1A

( ) Refer to Detail 6-1A and mount the fuseholder at S with a 6-32 x 3/8" screw, a #6 external lockwasher, a #6 lockwasher, and a 6-32 nut as shown.

( ) Connect the free end of the wire coming from AC socket P lug 1 to the fuseholder lug 2 (S-1). Make a mechanically secure connection.

( ) Connect the free end of the wire coming from switch S102A lug 1 to the fuseholder lug 1 (S-1). Make a mechanically secure connection.

( ) Refer to inset drawing and install a cable tie on all the wires near the phone jack as shown in the Pictorial. Cut off the excess cable tie.

( ) Connect the free end of the wire coming from control R102 lug 1 to speaker lug 2 (S-1).

ManualsPlus.com

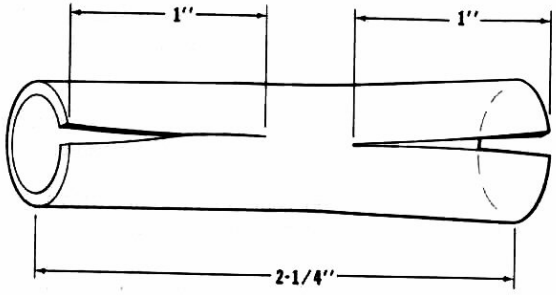

Detail 6-1B

( ) Refer to Detail 6-1B and cut a 1" slot in each end of a 2-1/4" length of clear sleeving. This prepared length of sleeving will be used in the next step.

NOTE: In the next step, if you wired your unit for 120 VAC, use the 1/16-ampere, slow-blow fuse supplied. If you wired your unit for 240 VAC, use a 1/32-ampere, slow-blow fuse (not supplied).

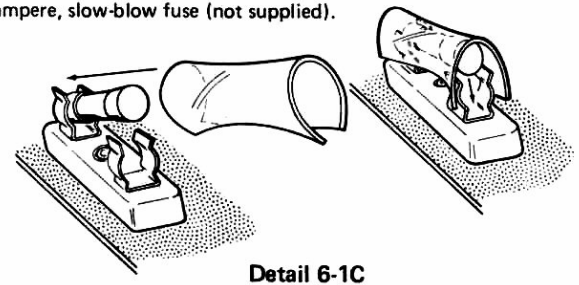

Detail 6-1C

( ) Push one end of the fuse into either fuseholder clamp. Slide the prepared 2-1/4" length of sleeving over the free end of the fuse; then push this end of the fuse into the other fuseholder clamp. See Detail 6-1C.

( ) Refer to Detail 6-1D and prepare the small insulator paper as shown.

( ) Remove the backing paper; then press the insulator paper first against the rear panel, and then against the foil side of the circuit board as shown in Detail 6-1E.

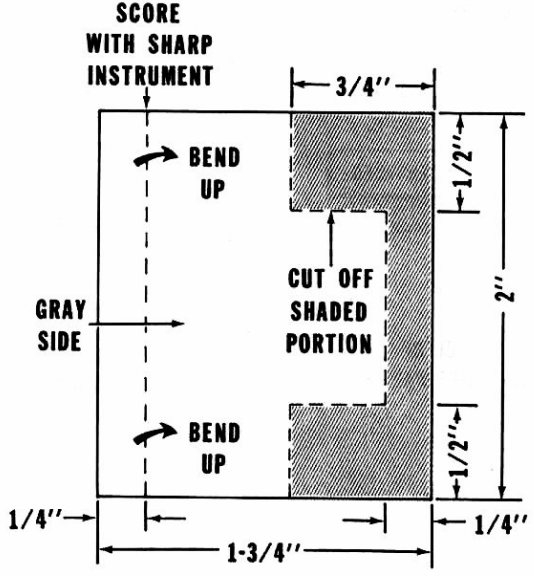

Detail 6-1D

ManualsPlus.com

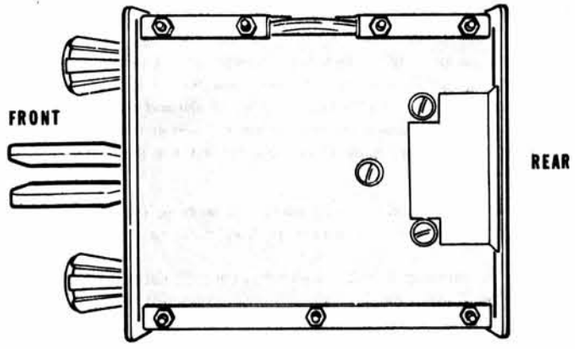

Detail 6-1E

KNOB INSTALLATION

Refer to Pictorial 7-1 for the following steps.

NOTE: If either paddle knob fits too loosely, in the following steps, apply a narrow strip of cellophane tape to either side of the paddle lever to provide a snug fit.

( ) Install a flat paddle knob on either paddle with the textured side out.

( ) Similarly, install the other paddle knob on the other paddle.

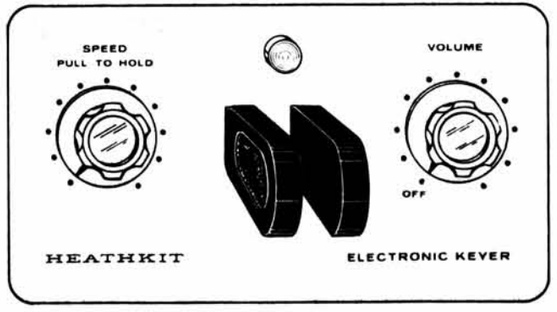

PICTORIAL 7-1

( ) Refer to Detail 7-1A (fold-out from this page) and push the knob inserts onto the two control shafts.

( ) Turn the SPEED control shaft fully counterclockwise and turn the VOLUME control fully counterclockwise until it clicks.

( ) Refer to Detail 7-1B and install a knob on the knob insert on the SPEED control. Position the pointer at 7 o'clock.

( ) Similarly, install the other knob on the VOLUME control. Be sure the knob pointer is toward OFF.

NOTE: You should have either a 10 kΩ or a 5600 Ω resistor left over, depending on which speed range you selected. Save this resistor in case you wish to change the speed range later.

This completes the initial assembly of your Keyer. Proceed to the "Tests and Adjustments."

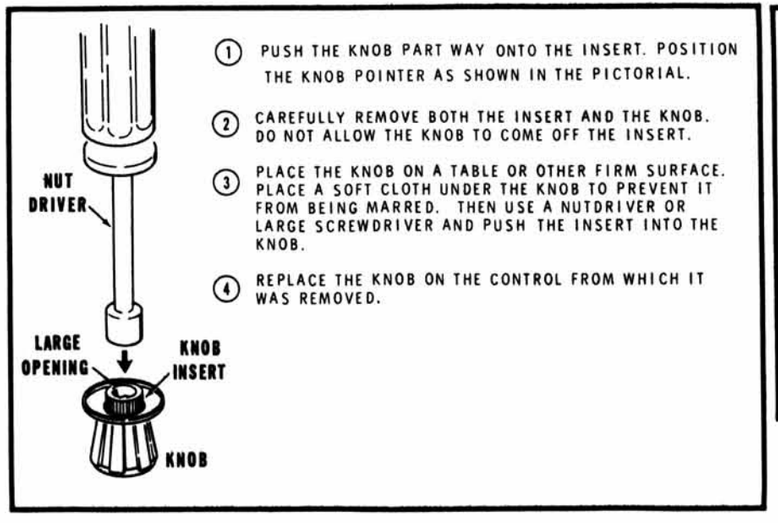

Detail 7-1B

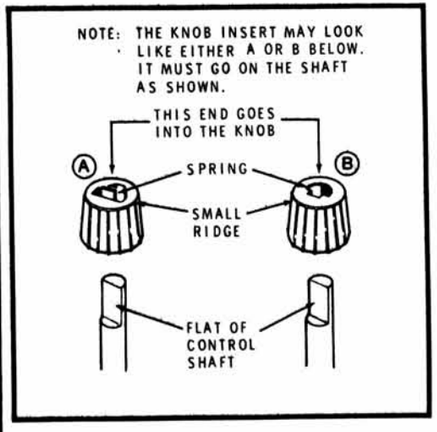

Detail 7-1A

ManualsPlus.com

TESTS AND ADJUSTMENTS

The purpose of this section of the Manual is to make sure your Electronic Keyer operates properly and will not be damaged as the result of a wiring error. A transistor or integrated circuit, for example, could be destroyed instantly by a short circuit that causes excessive current.

( ) Inspect the Electronic Keyer for improperly soldered connections, or connections that may have been missed and not soldered. Also check for solder bridges across two or more circuit board foils, which would cause a short circuit.

( ) Examine the chassis-mounted parts to make sure they are properly mounted and connected.

( ) Be sure no bare wires are touching any components or the chassis.

NOTE: If a VTVM is available, make the following "Resistance and Voltage Checks." If a meter is not available, proceed to "Operational Check."

RESISTANCE AND VOLTAGE CHECKS

These resistance and voltage checks are made to make sure there is no short circuit in the power supply. DO NOT plug in the line cord until you are instructed to do so.

NOTE: Some of the readings, in the following steps, may take a few seconds to reach the indicated resistance due to the charging of capacitor C11.

( ) Set your ohmmeter on the RX100 scale.

( ) Connect the common lead of your ohmmeter to either side panel.

NOTE: The resistances in the following steps are the minimum desired. If the resistance readings are significantly less, you must determine the reason (such as a short circuit caused by a solder bridge between foils) and correct it before you proceed. As some ohmmeters use the "common" lead as the positive lead, try reversing your ohmmeter leads if you do not get the designated resistance readings.

( ) Refer to Figure 2 and touch the ohmmeter probe to a solder connection at point 1. The meter reading should be 10 kΩ or higher.

( ) Touch the ohmmeter probe to a solder connection at point 2. The reading should be 10 kΩ or higher.

( ) Touch the ohmmeter probe to a solder connection at point 3. The reading should be 1500 ohms or higher.

( ) Set your meter to the lowest range capable of measuring +5 volts DC.

CAUTION: High voltage is exposed at several locations in the Electronic Keyer when the line cord is plugged into an AC outlet. Be extremely careful when you make the following voltage test.

NOTE: If the unit does not perform properly in any of the following checks, unplug the line cord and refer to the "In Case of Difficulty" section of the Manual on Page 55.

( ) Make sure the VOLUME control knob is turned to OFF and the SPEED control is pushed in.

( ) Plug the line cord into the AC socket on the rear panel of the Electronic Keyer and into an AC outlet.

ManualsPlus.com

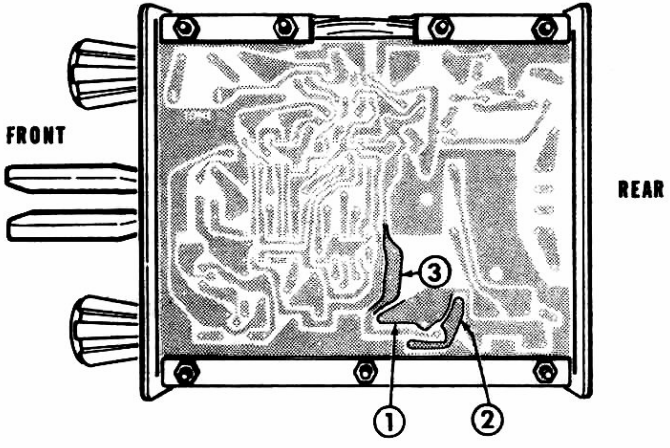

Figure 2

( ) Turn the VOLUME control knob to 12 o'clock. The pilot lamp should light.

( ) With your negative meter lead still connected to one of the side panels, measure the voltage at point 3. The meter reading should be +5 volts DC.

( ) Insert a small screwdriver into the circuit board hole labeled Tone. Then set the TONE control to the center of its rotation.

OPERATIONAL CHECK

NOTE: Upon initial turn-on, the Keyer may send a character. This is normal. If the Keyer emits a steady tone, touch one of the paddles to reset the circuitry.

( ) Turn the VOLUME control fully clockwise and the SPEED control to 12 o'clock.

( ) Push the right paddle lever to the left. You should hear dashes (dots if wired for left-hand operation).

( ) Push the left paddle lever to the right. You should hear dots (dashes if wired for left-hand operation).

( ) Squeeze the paddle levers together. You should hear alternate dots and dashes.

( ) Turn the SPEED control clockwise. The speed of the dots and dashes should increase.

( ) Pull the SPEED control out (HOLD). You should hear a steady tone from the speaker.

ManualsPlus.com

ADJUSTMENTS

There are three adjustments to be made. All are dependent on operator preference.

CAUTION: To avoid a shock hazard, unplug the line cord when you make the paddle adjustments.

Sidetone Frequency (tone)

( ) Use a small screwdriver and adjust the TONE control through the hole marked "Tone" on the foil side of the circuit board for the desired tone.

Paddle Travel

( ) Loosen the thumbnut on top of the cam lever. Adjust the cam lever for the desired paddle movement, and then lock it in place with the thumbnut. See Figure 3.

Paddle Tension

( ) Turn the thumbnut on the left side of the paddle assembly for the desired tension.

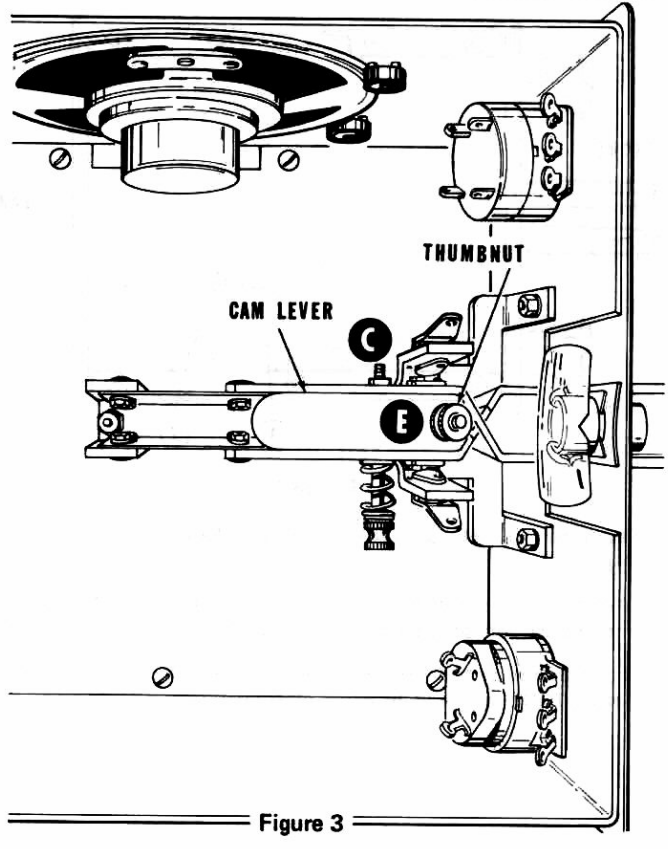

Figure 3

ManualsPlus.com

FINAL ASSEMBLY

Refer to Pictorial 8-1 for the following steps.

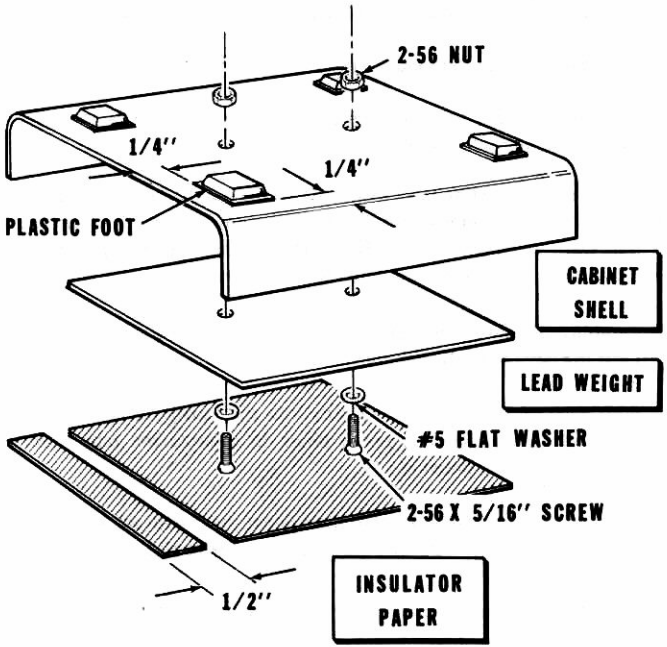

PICTORIAL 8-1

( ) Disconnect the line cord from the AC outlet or the Electronic Keyer.

( ) Position the lead weight in the center of one of the cabinet shell halves.

( ) Mount the lead weight on the inside of one of the cabinet shell halves with two 2-56 x 5/16" screws, two #5 flat washers, and two 2-56 nuts. Use the holes that most closely line up with the holes in the lead weight. Tighten each screw until its end is flush with the nut.

( ) Locate the piece of large insulator paper and cut 1/2" off its end.

( ) Peel the paper backing from the insulator paper; then press the insulator paper in place on the lead weight.

( ) Carefully peel the paper backing from each of the four plastic feet; then press them in place as shown.

ManualsPlus.com

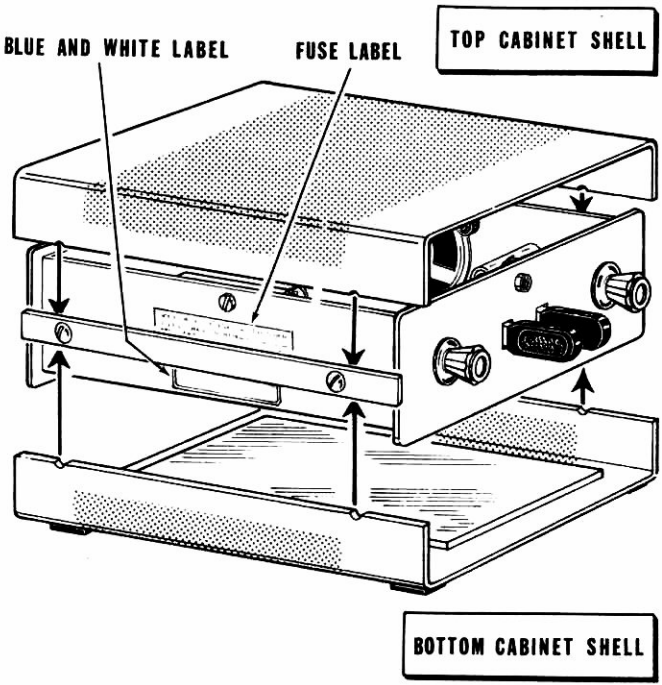

PICTORIAL 8-2

Refer to Pictorial 8-2 for the following steps.

( ) Write "1/16A, 3AG SLO-BLO" in the blanks on the fuse label ("1/32A, 3AG SLO-BLO" if your unit is wired for 240 VAC).

Refer to Detail 8-2A for the following steps.

( ) Remove the paper backing from the fuse label. Then press the label onto the left side panel as shown.

NOTE: The blue and white label shows the model number and production series number of your kit. Refer to these numbers in any communications you have with the Heath Company about this kit. This assures you that you will receive the most complete and up-to-date information in return.

( ) Carefully peel away the paper backing from the blue and white label. Then press the label onto the left side panel as shown.

( ) Push each of the four cabinet nuts into the square holes in the left and right side panels. Use long-nose pliers to squeeze the tabs together as shown in the inset drawing.

( ) Refer to the Pictorial and secure the cabinet shells with the trim plates and 6-32 x 5/16" screws. Be sure you mount the trim plates with the brushed side out.

Proceed to the "Installation" and "Operation" sections of the Manual.

ManualsPlus.com

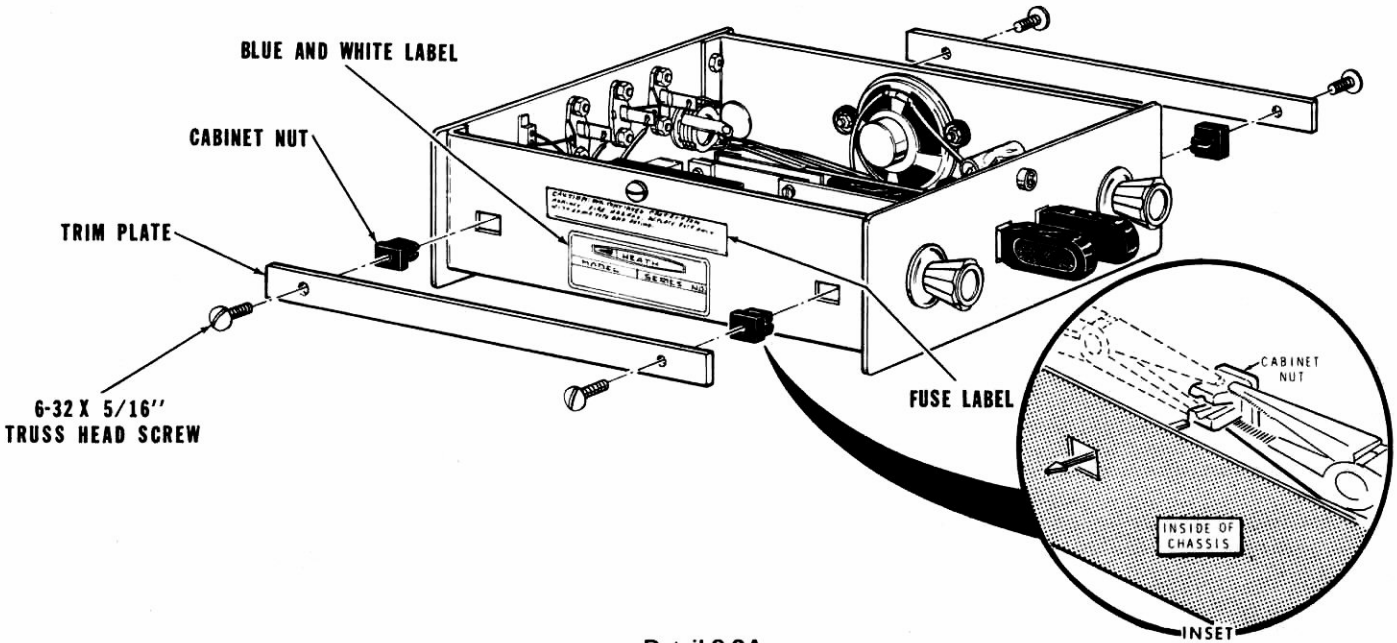

Detail 8-2A

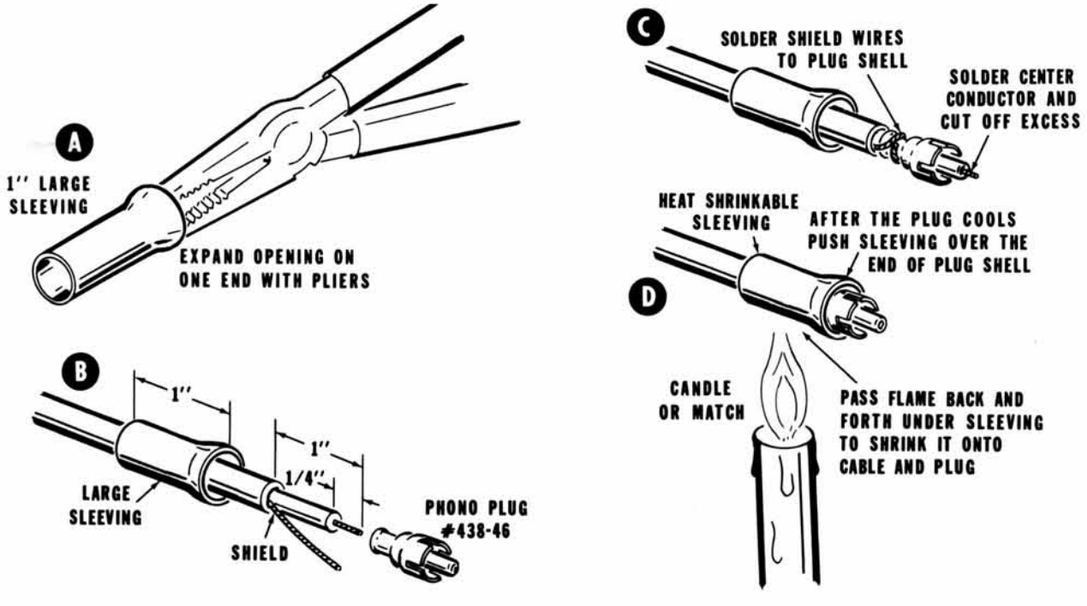

Figure 5

ManualsPlus.com

INSTALLATION

This section of the Manual shows how to connect the Electronic Keyer to your existing equipment.

BATTERY CONNECTION

The Electronic Keyer may be powered by a 10-14.5 volt battery for portable operation.

NOTE: When you are instructed to prepare the ends of stranded wire, remove 1/4" of insulation from each end. Twist together the small strands of wire at each end; then melt a small amount of solder on each of the exposed ends.

( ) Prepare the ends of the red stranded and black stranded wires.

( ) Refer to Figure 4 and solder a male terminal pin to one end of the red stranded wire.

( ) Similarly, solder a male terminal pin to one end of the black stranded wire.

( ) Position the female connector housing with the point up and push the male pin on the black wire into the upper hole, as shown, until the pin locks in place.

( ) Similarly, push the pin on the red wire into the lower hole, leaving the center hole open.

( ) Push the female terminal housing onto the male terminal housing on the rear panel of your Electronic Keyer.

( ) Connect the free end of the red wire to the plus "+" terminal of your battery.

( ) Connect the free end of the black wire to the negative "–" terminal of your battery.

NOTE: When you use the Electronic Keyer on AC, disconnect the battery to prevent the battery from being run down.

BASIC CONNECTION

NOTE: Three phono plugs and one phone plug are supplied with this kit for your use as needed. Refer to Figures 5 and 6 for information on how to connect these plugs to your cables. Use shielded cable between your transmitter and this Keyer. Be sure your transmitter is properly grounded.

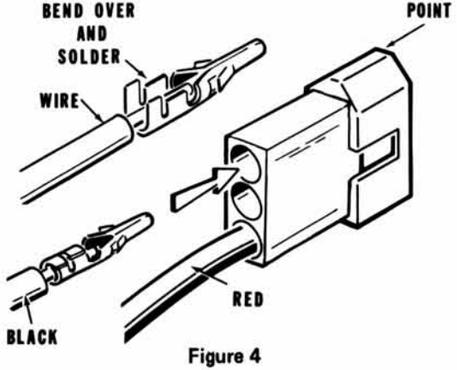

Figure 4

ManualsPlus.com

PREPARE THE END OF THE CABLE AS SHOWN.

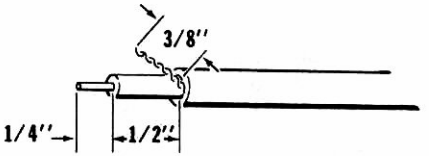

SOLDER THE SHIELD LEAD AND THE CENTER LEAD TO THE PHONE PLUG. THEN PINCH THE CLAMPS AROUND THE CABLE.

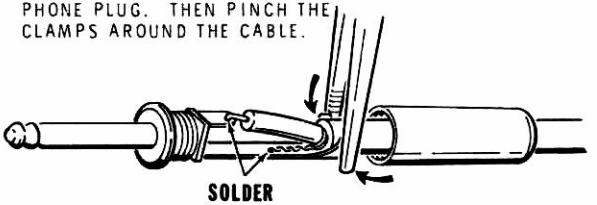

Figure 6

Figure 7 shows the basic connection for using the Keyer with a transmitter.

BASIC CONNECTION WITH EXTERNAL HAND KEY OR KEYING MECHANISM

Figure 8 shows how to connect the Keyer for use with an external hand key. The hand key will key the transmitter and the Electronic Keyer's sidetone oscillator with this hookup. Use shielded cable between the hand key and the Keyer.

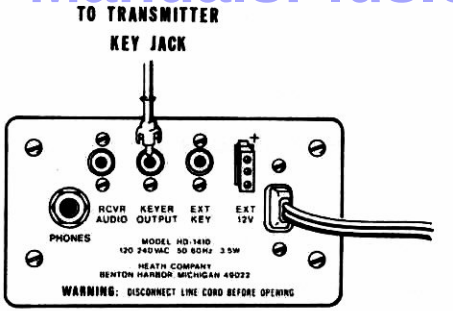

BASIC CONNECTION

Figure 7

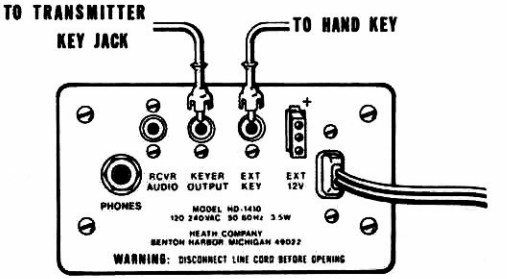

BASIC CONNECTION WITH HAND KEY

Figure 8

ManualsPlus.com

HEADPHONE CONNECTION

Figure 9 shows the connections for headphone operation. When a phone plug is connected to the PHONES jack, the speaker inside the Keyer will be automatically shut off. If a cable is connected between the RCVR AUDIO jack on the Keyer and the headphone jack on your receiver, the receiver audio will also be heard in the headphones.

NOTE: If you plan to use this Keyer with an HW-7 Transceiver, make the following modifications to the Transceiver:

1. Interchange the two wires that are connected to the key jack.
2. Change resistor R39 from 470 Ω to 4700 Ω.
3. Change resistor R14 from 47 KΩ to 10 KΩ.

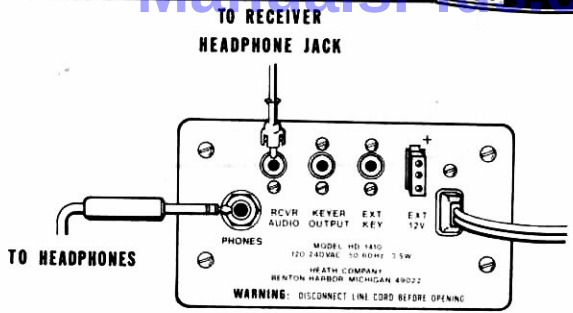

Figure 9

OPERATION

The HD-1410 Electronic Keyer is an iambic or "squeeze" keyer. As such, this Keyer has two independent paddles, one for dots and one for dashes. While you can treat the paddles as a single paddle without learning iambic operation, less effort is required to form many characters once you learn the iambic method.

When you depress both paddles simultaneously, a string of alternate dots and dashes will result. The first bit is determined by which paddle you depress first. The dual memories allow you to insert a dot into a series of dashes. Simply close the dash paddle and then tap the dot paddle during the dash bit it is to follow. The same is true when you want to insert a dash into a series of dots. Some examples will illustrate this.

When you want to send the letter C (—•—•), depress both paddles but be sure you close the dash contact first; then release the paddles during the second dash (the dot is remembered).

When you want to send the letter Q (——•—), depress the dash paddle; then tap the dot paddle during the second dash.

When you want to send the letter A (•—), tap both paddles quickly but be sure you close the dot contact slightly before you close the dash contact.

You will have to form some letters, such as P, X, E, and T, just as you would with a single paddle keyer.

You should practice operating the Electronic Keyer for some time before you use it "on the air." You will find this Electronic Keyer to have a different "feel" than other types of keyers. You should first learn to operate the paddles for each character at a slow speed. Then increase the speed as the process becomes second nature.

ManualsPlus.com

In use, you should place the Keyer so that your forearm rests on the table. This will keep your wrist from becoming tired and tense. It is important that you do not run letters and words together, as this would make it impossible to copy. You should remember that with the Electronic Keyer, you can easily send faster than many operators can copy. If a tape recorder is available, it is advisable that you record a few minutes of your sending. When you play back the tape, you can determine if more practice is required before you start "on-the-air" sending.

WARNING: TO PREVENT FIRE OR SHOCK HAZARD, DO NOT EXPOSE THE ELECTRONIC KEYER TO RAIN OR MOISTURE.

IN CASE OF DIFFICULTY

Begin your search for any trouble that occurs after assembly by carefully following the steps listed below in the "Visual Tests." After you complete the "Visual Tests", refer to the "Troubleshooting Chart."

NOTE: Refer to the "Circuit Board X-Ray Views" on Page 64 for the physical location of parts on the circuit boards.

VISUAL TESTS

1. Recheck the wiring. Trace each lead in colored pencil on the Pictorial as you check it. It is frequently helpful to have a friend check your work. Someone who is not familiar with the unit may notice something consistently overlooked by the kit builder.

2. About 90% of the kits that are returned to the Heath Company for repair do not function properly due to poor connections and soldering. Therefore, many troubles can be eliminated by reheating all connections to make sure they are soldered as described in the "Soldering" section of the "Kit Builders Guide." Be sure there are no solder bridges.

3. Check to be sure that all transistors and diodes are in their proper locations. Make sure each lead is connected to the proper point.

4. Check to be sure that each IC is properly installed in its socket, and the pins are not bent out or under the IC. Also be sure the IC's are installed in their correct positions.

5. Check the values of the parts. Be sure in each step that the proper part has been wired into the circuit, as shown in the Pictorial Diagrams. It would be easy, for example, to install a 100 Ω (brown-black-brown) resistor where a 1000 Ω (brown- black-red) resistor should have been installed.

6. Check for bits of solder, wire ends, or other foreign matter which may be lodged in the wiring.

7. Look between the circuit board and the chassis to be sure all leads have been cut off.

8. A review of the "Circuit Description" may also help you to determine where the trouble is.

ManualsPlus.com

If the trouble is still not located after the "Visual Tests" are completed, and a voltmeter is available, check voltage readings against those shown on the "Schematic Diagram" (fold-out from Page 71) or on the "Voltage Chart" on Page 66. Read the "Precautions for Troubleshooting" below before you take any measurements. NOTE: All voltage readings are taken with a high impedance voltmeter. Voltages may vary as much as ±20%.

NOTE: In an extreme case where you are unable to resolve a difficulty, refer to the "Customer Service" information inside the rear cover of this Manual. Your Warranty is located inside the front cover.

PRECAUTIONS FOR TROUBLESHOOTING

1. Be cautious when you test IC and transistor circuits. Although they have almost unlimited life when used properly, they are much more vulnerable to damage from excessive voltage or current than tubes.
2. Be sure you do not short any terminals to ground when making voltage measurements. If the probe should slip, for example, and short across components or voltage sources, it is very likely to cause damage to one or more IC's, transistors, or diodes.
3. High voltages are exposed in the Electronic Keyer when the line cord is plugged into an AC outlet. Refer to the "Chassis Photograph" on Page 67 for the location of these high voltage areas.

NOTES:

1. IC1 and IC2 can be checked by substituting one for the other. If the symptoms change, one of them is bad.
2. The clock can be checked without test equipment by removing IC1 and IC5, and connecting a jumper wire between lug 2 of the SPEED control (R101) and pin 4 of the socket at IC5. Be sure the VOLUME control is fully clockwise. If the clock circuit is operating, you will hear a series of clicks.

Troubleshooting Chart

CONDITION	POSSIBLE CAUSE
Locks in a continuous tone condition when a paddle is touched.	D1 or D2 shorted or backwards; IC3 or IC4; Q1, Q2, or Q4; D3 open or installed backwards; C3 installed backwards.
Keyer turns on in a continuous tone condition, paddles have no effect.*	IC3, IC4, Q4, Q5, Q6, or Q7; shorted "Ext Key" jack; SPEED knob pulled out (hold condition).

*Occasionally the Keyer may turn on in a continuous tone condition, but will reset when either paddle is touched. This is normal.

ManualsPlus.com

Will not operate.	Blown fuse, Q2 shorted, Q4 open, IC3, IC4, Q5, Q6, Q7, Q8, or D7, C3 installed backwards.
Erratic operation.	D1 open.
Erratic dots, dashes okay	C2 open.
Continuous string of dots.	C2 shorted, IC3 or IC5, paddle contacts shorting.
Erratic dashes, dots okay,	C1 open.
Continuous string of dashes.	C1 shorted, IC3 or IC5, paddle contacts shorting.
No sidetone but keys the transmitter properly.	C5, C6, Q3, IC5, or open speaker.
Will not key transmitter – sidetone okay.	Q5, Q6, or Q7 (see Note below).

NOTE: This Keyer is designed to be compatible with most rigs that use solid-state keying circuits as well as those that use grid-block or cathode keying. However, some solid-state keying circuits require the key line to be brought within a few tenths of a volt from ground to operate properly. If this Keyer will be used exclusively with one of these rigs, remove resistor R27 and diode D5 and replace them with jumper wires. This will reduce the voltage drop to the V_{CE} of Q6.

ManualsPlus.com

SPECIFICATIONS

KEYING

Speed	Variable from less than 10 to over 60 words per minute. (Alternate connection for less than 10 to over 35 words per minute.)
Keyer Output	Positive line to ground: Max. voltage, open circuit or spikes – 300V. Max. current – 200mA. Negative line to ground: Max. voltage, open circuit or spikes – 200V. Max. current – 10mA.

General

Audio	Internal speaker or high impedance (at least 500 Ω) headphone jack.
Sidetone	Frequency internally adjustable from approximately 500 to 1000 Hz.
Controls	
Front panel	Speed/Pull to hold. On-off/Volume.
Internal	Sidetone frequency. Paddle tension. Paddle travel.

ManualsPlus.com

Rear Panel Connections	Power cord. Keyer output. Headphones. External 12 volts. Receiver audio. External key.
Solid-State Complement	
Diodes	5 – 1N4002 silicon. 3 – GD-510 germanium. 2 – 1N2071 silicon. 1 – 1N709A zener.
Transistors	1 – X29A829 PNP. 3 – MPS-A20 NPN. 1 – MPS-D51 PNP. 2 – MPS-A42 NPN. 1 – D40C1 Darlington.
Integrated circuits	2 – 7400 Quad 2-input, positive NAND gate. 1 – 7402 Quad 2-input, positive NOR gate. 1 – 7410 Triple 3-input, positive NAND gate. 1 – 7473 Dual J-K, Master-Slave Flip-Flop.
Temperature Range	0°C to 40°C (Typical: –10°C to 40°C).

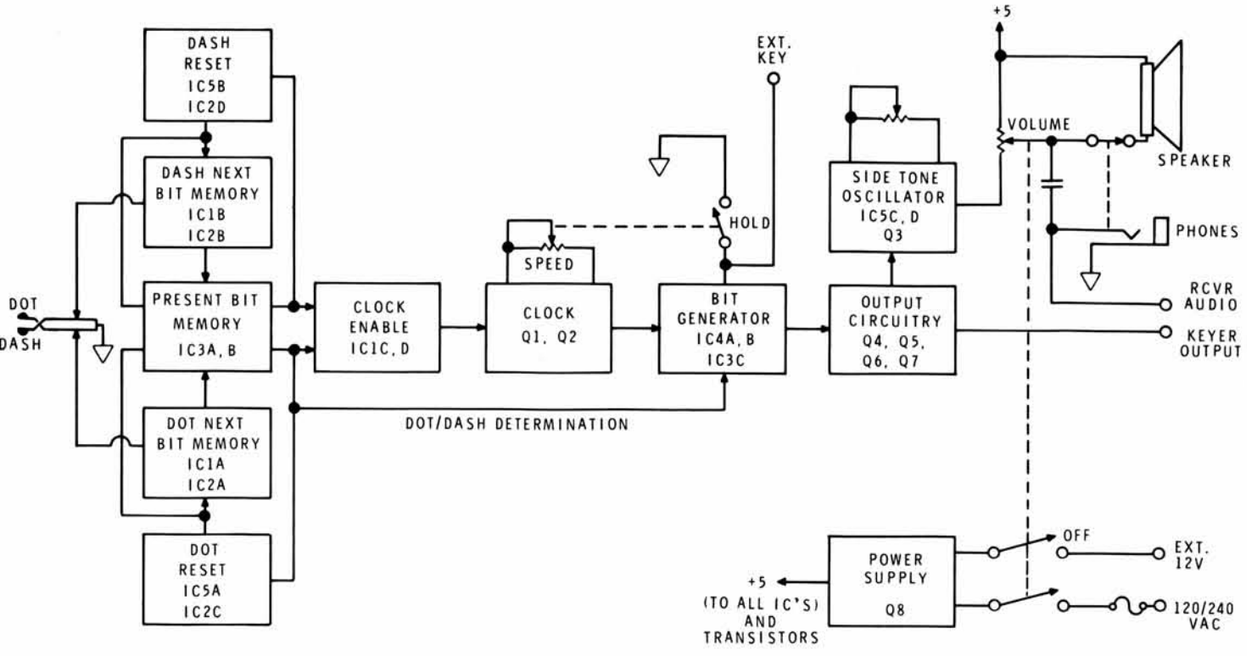

BLOCK DIAGRAM

ManualsPlus.com

Power Requirements	
AC operation	120 volts ±10% or 240 volts ±10%, AC, 50/60 Hz, 3.5 watts.
Battery operation	10 to 14.5 volts DC, negative ground 150 mA.
Dimensions (overall)	5" wide x 3" high x 7.4" deep (12.7 cm x 7.62 cm x 18.8 cm).
Net Weight	2.75 lbs (1.25 kg).

The Heath Company reserves the right to discontinue products and to change specifications at any time without incurring any obligation to incorporate new features in products previously sold.

CIRCUIT DESCRIPTION

Refer to the Schematic Diagram (fold-out from Page 71) and the Block Diagram (fold-out from Page 60) while you read the following description.

To help you locate parts in the Keyer or on the Schematic, the resistors, capacitors, and other components are numbered in the following groups.

1–99	Parts mounted on the circuit board.
101–199	Parts mounted on the chassis.

The following terms and their definitions will be used during this description.

Mark: Key-down condition; IC3 pin 12 is high.
Space: Key-up condition; IC3 pin 12 is low.
Dot bit: Dot-mark and space following ⎍.
Dash bit: Dash-mark and space following ⎍.

ManualsPlus.com

When you operate the paddles, the "present bit memory" commands the clock enable circuit to start a bit and insures that the present bit is completed before another starts. The "next bit memories" retain the information of which bit is next (a dot or dash), if a dot or dash was keyed before the present bit is completed. After the present bit is completed, the "resets" load the "present bit memory" with the information that is in the "next bit memories." Each dot, dash, and off time is uniform because of the clock which produces uniformly spaced pulses. The bit generator then responds to the clock pulses and the dot/dash determining line to produce a dot (or a dash that is three times longer than the dot) and an off time. The output circuitry drives the keyer output and sidetone circuitry.

Because of the sequence of digital logic involved, the clock will be explained first.

CLOCK

The clock consists of transistors Q1, Q2, and their associated circuitry. When IC1 pin 8 is high the clock is disabled. Capacitor C3 charges through diode D1 and biases Q1 off. With Q1 off, the base of Q2 is high. Therefore, Q2 is also off and the clock output is low. Note that the high on IC1 pin 8 is also applied through D2 to IC4 pin 5. When IC1 pin 8 goes low (bit being sent), IC4A changes state. D1 is then back-biased and C3 begins to discharge through resistor R9, Speed control R101, and resistor R11. When its voltage drops to the base potential of Q1, Q1 begins to turn on. The collector of Q1 and the base of Q2 begin to go less positive and turn on Q2. As Q2 turns on, its rising collector potential is coupled through capacitor C4 to the base of Q1 and turns it on harder. Thus the condition is regenerative and happens very quickly.

The output is now high. This high on the collector of Q2 is applied to IC4 pin 5 by diode D3. C3 charges quickly through resistor R7, the base-emitter junction of Q2 and Q1. C4 discharges and Q1 turns off, thus turning off Q2. This high-to-low transition on IC4 pin 5 again changes the state of IC4A. Note that D2, D3, and resistor R12 form an "OR" gate and that IC4A changes state when IC1 pin 8 goes low (when the paddle is first keyed), and on the trailing edge of each clock pulse.

BIT GENERATOR

The bit generator is composed of IC4A and B, and IC3C. In the resting condition, IC4A and B are reset (Q outputs low). The highs on IC3 pins 1, 2, and 13 cause IC3 pin 12 to be low (key-up). If IC4 pin 2 is low, IC4B cannot change state. The waveform in Figure 10 show how dots and dashes are formed. Note that if IC4 pin 2 is low, dots are generated; if it is high, dashes are generated.

NEXT-BIT MEMORIES (NBM)

There are two "next-bit memories;" one for dots, composed of gates IC1A and IC2A, and one for dashes, composed of gates IC1B and IC2B. Each pair of gates is cross-coupled to form an R-S (set-reset) flip-flop. Since their operation is similar, only the dash NBM will be discussed.

ManualsPlanet.com

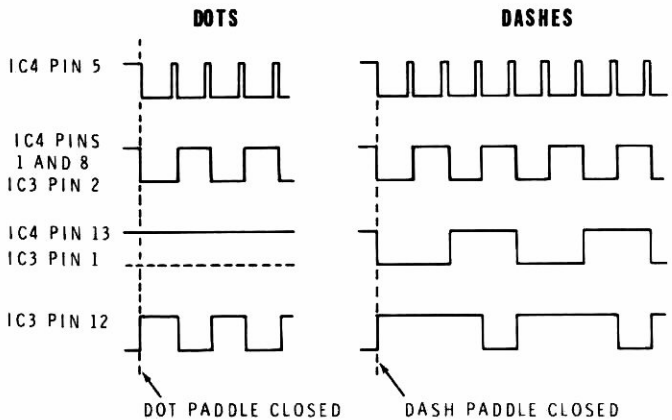

Figure 10

When no bit is being sent, IC2 pin 8 is high since the clock is low. The dash NBM is in the reset condition, with IC2 pin 6 high and IC1 pin 3 low. This low is applied to IC3 pin 4. Therefore, IC3 pin 6 is high. (Similarly, IC3 pin 8 is also high.) When the dash paddle is keyed, IC1 pin 1 is grounded momentarily through the paddle contacts. This causes IC1 pin 3 to go high. IC2 pins 4 and 5 are both high, so IC2 pin 6 goes low. This low is applied to IC1 pin 2 and holds IC1 pin 3 high after the paddle is released. IC3B now has a high on all three inputs, so pin 6 is low. This low is applied to IC1 pin 13, and IC1 pin 11 goes high. IC1 pin 8 goes low, and the bit generator begins to form a dash (since IC4 pin 2 is high).

PRESENT-BIT MEMORY (PBM)

Note that IC3A and B form an R-S flip-flop which, depending on its state, causes the bit generator to form dots or dashes as described in the section on the bit generator.

RESET CIRCUITRY

At the end of a bit, whether dot or dash, the PBM must assume the state of the next bit to be sent. This is accomplished by the reset circuitry. IC5B, IC2D, resistor R3 and capacitor C1 form the dash reset circuit. (The dot reset circuitry is composed of IC5A, IC2C, resistor R4, and capacitor C2 operates the same). Iambic operation requires that if both paddles are closed, or if the dot paddle is keyed during a dash bit, or the dash paddle is keyed during a dot bit, the next bit must be opposite to that being sent.

Assume a dot is being sent. This means that IC3 pin 8 is low and IC3 pin 6 is high. This high is applied to IC5 pin 9 and holds IC5 pin 10 low. The trailing edge of the clock pulse occurring at the end of the dot bit mark takes IC3 pin 12 low. At this time, IC5A has both inputs low, and IC5 pin 13 goes high. This enables IC2C for the next clock pulse, which occurs at the end of the dot bit. The leading edge of this clock pulse takes IC2 pin 11 low. This will reset the dot NBM unless the dot paddle is still closed. If the dash paddle has not been closed, then there is a low on IC3 pin 4 which holds IC3 pin 6 high, and the PBM cannot change state. Thus the next bit will be another dot. If, however, the dash paddle has been keyed sometime during the dot bit, then IC3 pin 4 will be high. When IC2 pin 11 goes low, IC3 pin 10 goes low, and IC3 pin 8 goes high. Then IC3B has all inputs high so IC3 pin 6 goes low and holds IC3 pin 8 high following the clock pulse. On the trailing edge of this clock pulse, the bit generator begins a dash, since IC4 pin 2 is high.

ManualsPlus.com

A necessary delay is provided by R3 and C1. Recall that when the PBM changed state, IC3 pin 6 went low on the leading edge of the clock pulse. IC3 pin 12 does not go high until the trailing edge of the clock pulse. Were it not for the delay, IC2 pins 9 and 10 would be high, and the low on IC2 pin 8 would remove the dash from this memory if one were stored there.

OUTPUT CIRCUITRY

When IC3 pin 12 goes high (mark condition), it turns on the Darlington pair, transistors Q6 and Q7, which will key positive lines to ground. Transistor Q4 also turns on, thus turning on transistor Q5 and keying negative lines to ground through the power supply and resistor R25. Note that no more than approximately 10 mA may be keyed by this circuit since it is a constant current sink which limits at 10 mA. Diodes D4 and D5 isolate the two sections.

SIDETONE OSCILLATOR

The Sidetone Oscillator is made up of IC5 C and D, which are cross-coupled to form an astable multivibrator. It is enabled when IC5 pin 6 goes low. Its output is coupled to Q3, which drives the speaker.

POWER SUPPLY

The Power Supply is a conventional series regulated bridge circuit that supplies +5 volts. Diode D6 protects the power supply against reversed battery polarity.

ManualsPlus.com

CIRCUIT BOARD X-RAY VIEWS

NOTE:

To find the PART NUMBER of a component for the purpose of ordering a replacement:

A. Find the circuit component number (R15, C3, etc.) on the X-Ray View or "Chassis Photograph."

B. Locate this same number in the "Circuit Component Number" column of the "Parts List."

C. Adjacent to the circuit component number, you will find the PART NUMBER and DESCRIPTION which must be supplied when you order a replacement part.

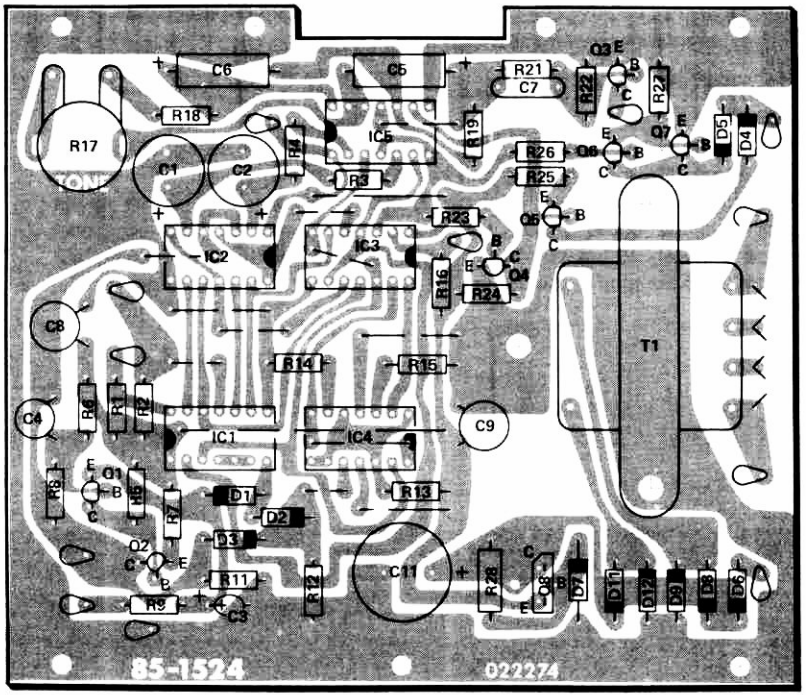

(Viewed from foil side)

ManualsPlus.com

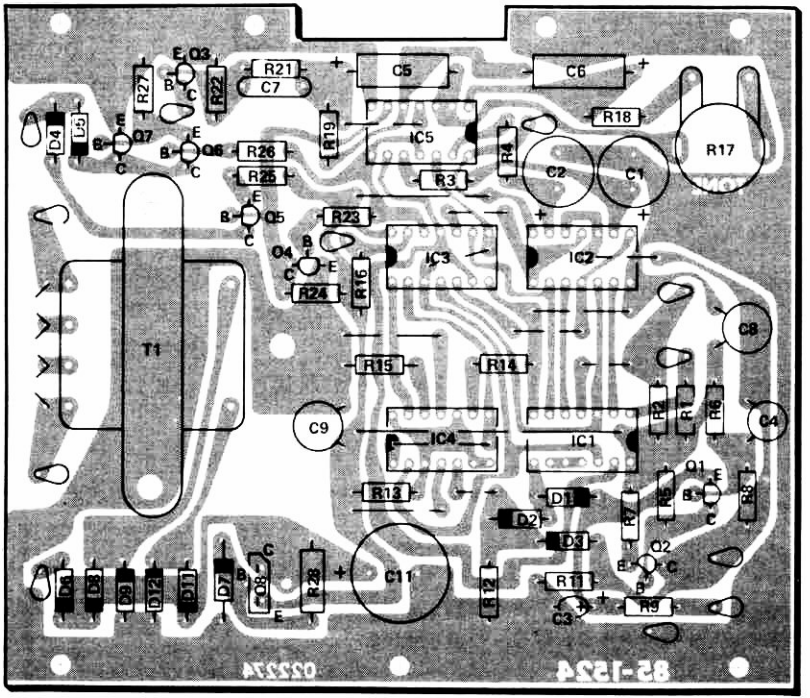

(Viewed from component side)

ManualsPlus.com

CIRCUIT BOARD VOLTAGE CHART

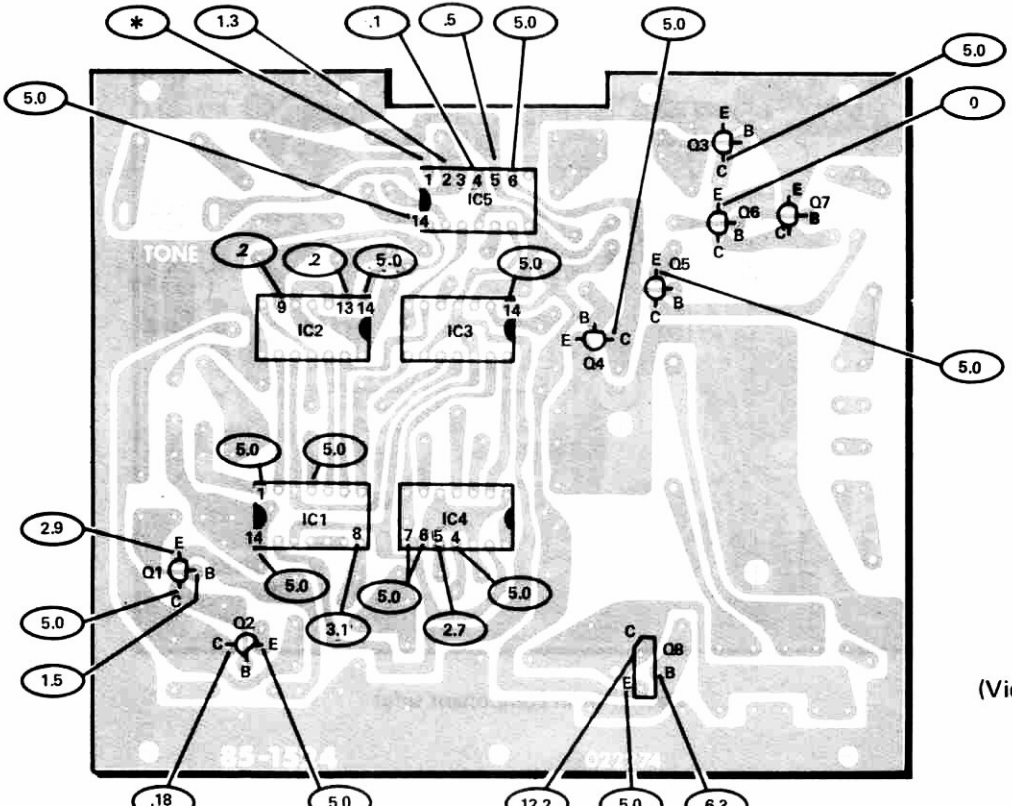

(Viewed from foil side)

ManualsPlus.com

WARNING: Boxed-in areas indicate hazardous voltage locations.

CHASSIS PHOTOGRAPH

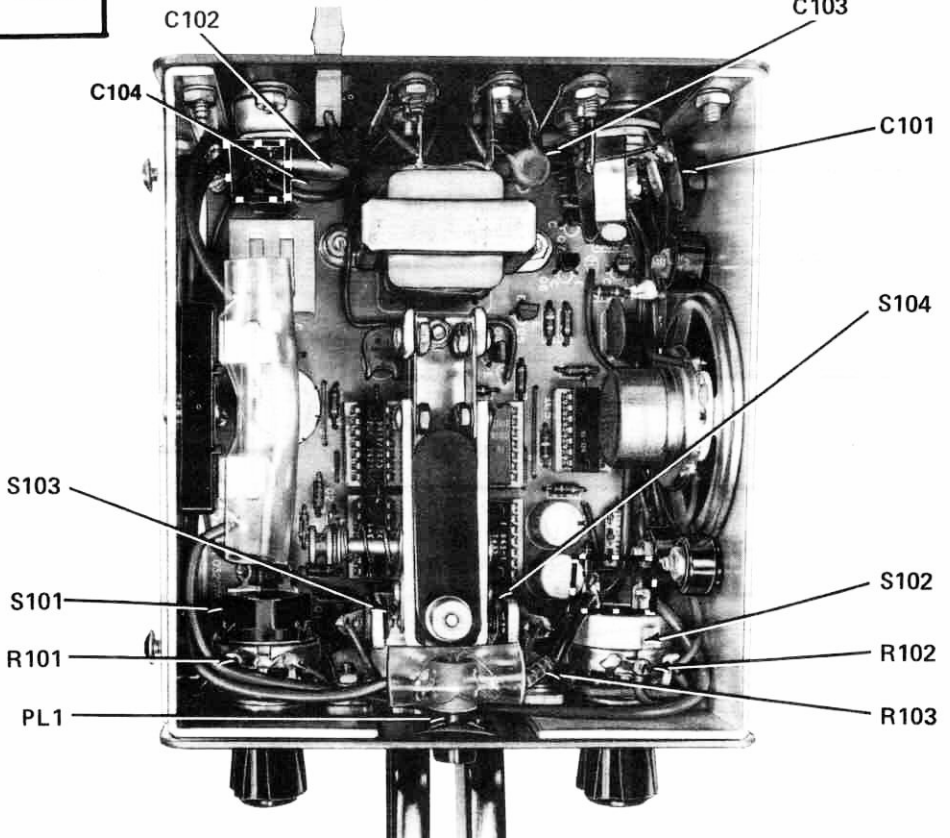

ManualsPlus.com

IDENTIFICATION CHART

DIODES

COMPONENT	HEATH PART NO.	TYPE	IDENTIFICATION
D7	56-58	1N709A ZENER DIODE 6.2V, 25mA.	IMPORTANT: THE BANDED END OF DIODES CAN BE MARKED IN A NUMBER OF WAYS. 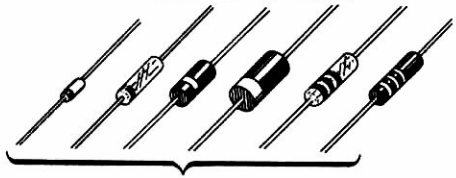
D1, D2, D3	56-89	GD-510 GERMANIUM DIODE 25V, 100mA.	
D4, D5	57-27	1N2071 SILICON DIODE 600V, 1A.	
D6, D8, D9, D11, D12	57-65	1N4002 SILICON DIODE 100V, 1A.	

ManualsPlus.com

TRANSISTORS

COMPONENT	HEATH PART NO.	TYPE	IDENTIFICATION
Q2	417-201	X29A829	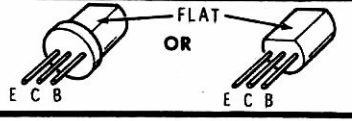
Q8	417-272	D40C1	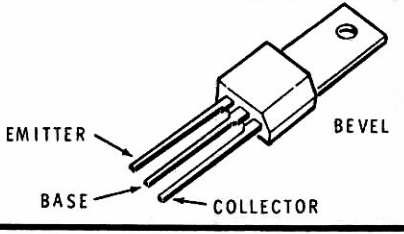
Q6, Q7	417-294	MPSA42	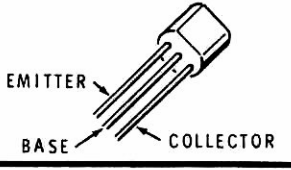
Q1, Q3, Q4	417-801	MPSA20	
Q5	417-836	MPS-D51	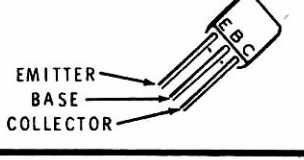

ManualsPlus.com

INTEGRATED CIRCUITS

COMPONENT	HEATH PART NO.	TYPE	IDENTIFICATION
IC1, IC2	443-1	7400	TOP VIEW 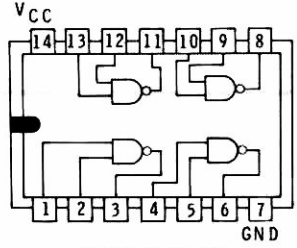 QUAD 2-INPUT POSITIVE NAND GATE
IC4	443-5	7473	TOP VIEW 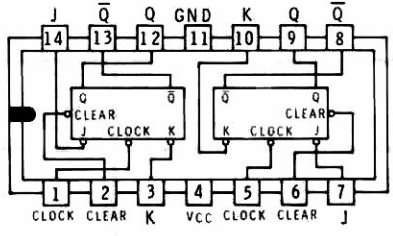 DUAL J-K MASTER-SLAVE FLIP-FLOP

TRUTH TABLE (Each Flip-Flop)

t_n		t_n+1
J	K	Q
0	0	Q_n
0	1	0
1	0	1
1	1	$\bar{Q}_n$

COMPONENT	HEATH PART NO.	TYPE	IDENTIFICATION
IC3	443-12	7410	TOP VIEW 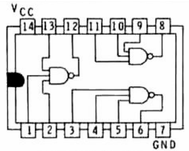 TRIPLE 3-INPUT POSITIVE NAND GATE
IC5	443-46	7402	TOP VIEW 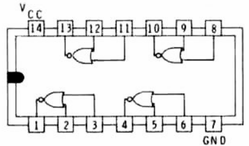 QUAD 2-INPUT POSITIVE NOR GATE

ManualsPlus.com

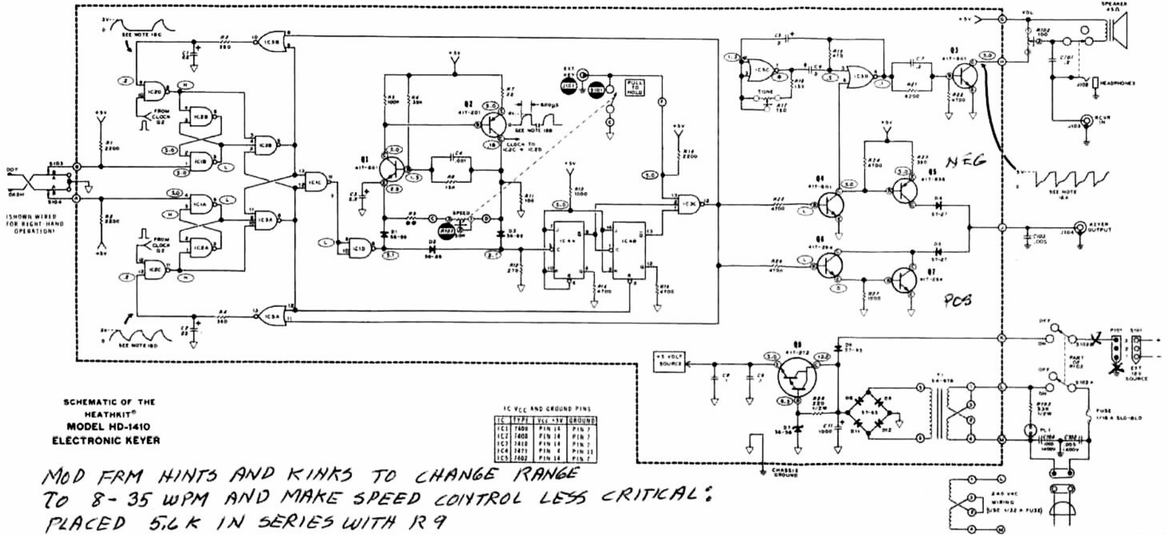

SCHEMATIC OF THE HEATHKIT® MODEL HD-1410 ELECTRONIC KEYER

IC VCC AND GROUND PINS

IC	TYPE	VCC +5V	GROUND
IC1	7400	PIN 14	PIN 7
IC2	7400	PIN 14	PIN 7
IC3	7410	PIN 14	PIN 7
IC4	7411	PIN 14	PIN 7
IC5	7402	PIN 14	PIN 7

NOTES:

1. COMPONENT NUMBERS ARE IN THE FOLLOWING GROUPS:
   1-99 PARTS MOUNTED ON THE CIRCUIT BOARD.
   101-199 PARTS MOUNTED ON THE CHASSIS.
2. ALL RESISTORS ARE 1/4 WATT UNLESS MARKED OTHERWISE. RESISTOR VALUES ARE IN OHMS (K=1000).
3. VOLTAGES MAY VARY ±20%.
4. ALL CAPACITOR VALUES ARE IN MICROFARADS (µF).
5. REFER TO THE CHASSIS PHOTOGRAPHS AND CIRCUIT BOARD X-RAY VIEWS FOR THE PHYSICAL LOCATION OF PARTS.
6. ▽ THIS SYMBOL INDICATES CIRCUIT BOARD GROUND.
7. ⏚ THIS SYMBOL INDICATES CHASSIS GROUND.
8. Ⓐ THIS SYMBOL INDICATES A LETTERED CIRCUIT BOARD CONNECTION THAT IS SOLDERED.
9. ● THIS SYMBOL INDICATES A PART NOT MOUNTED ON THE CIRCUIT BOARD.
10. → INDICATES CLOCKWISE ROTATION OF CONTROL SHAFT.
11. →→ THIS SYMBOL INDICATES THAT LIKE POINTS ARE CONNECTED TOGETHER.
12. ⬭ THIS SYMBOL INDICATES A DC VOLTAGE TAKEN UNDER THE FOLLOWING CONDITIONS FROM THE POINT INDICATED TO CHASSIS GROUND WITH A HIGH IMPEDANCE VOLTMETER.
    A. KEYER DISCONNECTED FROM TRANSMITTER.
    B. KEYER CONNECTED TO AC POWER.
    C. ALL CONTROLS SET TO MIDRANGE.
    D. SPEED KNOB PUSHED IN.
13. L - LOW LEVEL LOGIC: APPROX. .09V
14. H - HIGH LEVEL LOGIC: APPROX. 4V
15. ● THIS SYMBOL INDICATES THE VOLTAGE DEPENDS ON THE SETTING OF CONTROL R17.
16. THE WAVEFORMS WERE TAKEN UNDER THE FOLLOWING CONDITIONS:
    A. SPEED KNOB PULLED OUT (HOLD). TONE CONTROL IN MID POSITION.
    B. BOTH PADDLES DEPRESSED.
    C. SPEED CONTROL AT 12 O'CLOCK POSITION. DASH PADDLE DEPRESSED.
    D. SPEED CONTROL AT 12 O'CLOCK POSITION. DOT PADDLE DEPRESSED.
17. ●● 560ΩΩ FOR 10 TO 60 WORDS PER MINUTE SPEED.
    10KΩ FOR 10 TO 35 WORDS PER MINUTE SPEED.

MOD FRM HINTS AND KINKS TO CHANGE RANGE TO 8-35 WPM AND MAKE SPEED CONTROL LESS CRITICAL:
PLACED 5.6K IN SERIES WITH R9
SHUNT SPEED CONTROL WITH 33K

12VDC LINES FROM P101 BROKEN AT "X" AND DOT-DASH CONNECTED TO DOT-DASH CONTACTS OF INTERNAL PADDLE

EXTERNAL PADDLE CONNECTIONS

CUSTOMER SERVICE

ManualsPlus.com

REPLACEMENT PARTS

Please provide complete information when you request replacements from either the factory or Heath Electronic Centers. Be certain to include the **HEATH** part number exactly as it appears in the parts list.

Replacement parts are maintained specifically to repair Heath products. Parts sales for other reasons will be declined.

ORDERING FROM THE FACTORY

Print all of the information requested on the parts order form furnished with this product and mail it to Heath. For telephone orders (parts only) dial 616 982-3571. If you are unable to locate an order form, write us a letter or card including:

- Heath part number.
- Model number.
- Date of purchase.
- Location purchased or invoice number.
- Nature of the defect.
- Your payment or authorization for COD shipment of parts not covered by warranty.

Mail letters to: Heath Company
Benton Harbor
MI 49022
Attn: Parts Replacement

Retain original parts until you receive replacements. Parts that should be returned to the factory will be listed on your packing slip.

OBTAINING REPLACEMENTS FROM HEATH ELECTRONIC CENTERS

For your convenience, "over the counter" replacement parts are available from the Heath Electronic Centers listed in your catalog. Be sure to bring in the original part and purchase invoice when you request a warranty replacement from a Heath Electronic Center.

TECHNICAL CONSULTATION

Need help with your kit? — Self-Service? — Construction? — Operation? — Call or write for assistance. you'll find our Technical Consultants eager to help with just about any technical problem except "customizing" for unique applications.

The effectiveness of our consultation service depends on the information you furnish. Be sure to tell us:

- The Model number and Series number from the blue and white label.
- The date of purchase.
- An exact description of the difficulty.
- Everything you have done in attempting to correct the problem.

Also include switch positions, connections to other units, operating procedures, voltage readings, and any other information you think might be helpful.

Please do not send parts for testing, unless this is specifically requested by our Consultants.

Hints: Telephone traffic is lightest at midweek — please be sure your Manual and notes are on hand when you call.

Heathkit Electronic Center facilities are also available for telephone or "walk-in" personal assistance.

REPAIR SERVICE

Service facilities are available, if they are needed, to repair your completed kit. (Kits that have been modified, soldered with paste flux or acid core solder, cannot be accepted for repair.)

If it is convenient, personally deliver your kit to a Heathkit Electronic Center. For warranty parts replacement, supply a copy of the invoice or sales slip.

If you prefer to ship your kit to the factory, attach a letter containing the following information directly to the unit:

- Your name and address.
- Date of purchase and invoice number.
- Copies of all correspondence relevant to the service of the kit.
- A brief description of the difficulty.
- Authorization to return your kit COD for the service and shipping charges. (This will reduce the possibility of delay.)

Check the equipment to see that all screws and parts are secured. (Do not include any wooden cabinets or color television picture tubes, as these are easily damaged in shipment. Do not include the kit Manual.) Place the equipment in a strong carton with at least THREE INCHES of *resilient* packing material (shredded paper, excelsior, etc.) on all sides. Use additional packing material where there are protrusions (control sticks, large knobs, etc.). If the unit weighs over 15 lbs., place this carton in another one with 3/4" of packing material between the two.

Seal the carton with reinforced gummed tape, tie it with a strong cord, and mark it "Fragile" on at least two sides. Remember, the carrier will not accept liability for shipping damage if the unit is insufficiently packed. Ship by prepaid express, United Parcel Service, or insured Parcel Post to:

Heath Company
Service Department
Benton Harbor, Michigan 49022

ManualsPlus.com

HEATH ZENITH

HEATH COMPANY • BENTON HARBOR, MICHIGAN

THE WORLD'S FINEST ELECTRONIC EQUIPMENT IN KIT FORM

LITHO IN U.S.A.