ManualsPlus.com

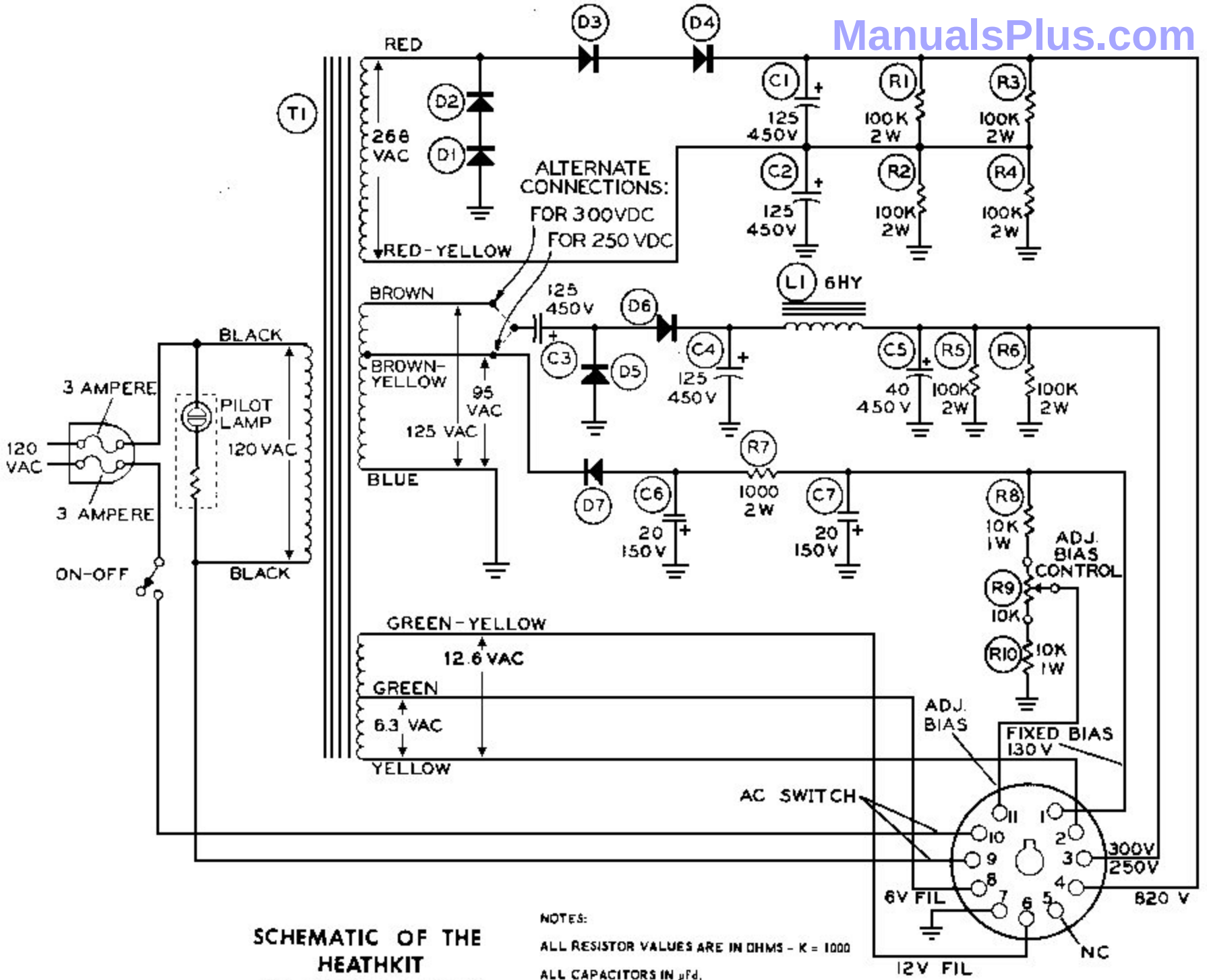

SCHEMATIC OF THE
HEATHKIT
AC POWER SUPPLY

MODEL HP - 23

NOTES:

ALL RESISTOR VALUES ARE IN OHMS - K = 1000

ALL CAPACITORS IN μFd.

ALL DC VOLTAGES MEASURED FROM POINT INDICATED TO GROUND.

VOLTAGES MADE WITH 11 MEGOHM INPUT VTVM.