ManualsPlus.com

Assembly and Operation of the

HEATHKIT®

LOW-POWER CW TRANSCEIVER

MODEL HW-8

HEATH COMPANY
BENTON HARBOR, MICHIGAN 49022

Copyright © 1975
Heath Company
All rights reserved

ManualsPlus.com

TABLE OF CONTENTS

INTRODUCTION 3

ASSEMBLY NOTES 5
Soldering Instructions 6

CIRCUIT BOARD
Parts List 9
Step-by-Step Assembly 17
Circuit Board Wiring 37

CHASSIS
Parts List 43
Step-by-Step Assembly 48
Rear Panel Parts Mounting 48
Mounting and Wiring Rear Panel 48
Mounting Panel/Circuit Board Assembly 49
Chassis Parts Mounting and Wiring 50
Front Panel Mounting 54
Installing Knobs 55
Final Parts Mounting and Wiring 56
Preparing Power Cable 57
Preparing Dummy Load 57

INITIAL TESTS 59

ALIGNMENT 61

FINAL ASSEMBLY 65

OPERATION 67

IN CASE OF DIFFICULTY 69
Visual Checks 70
Precautions for Bench Testing 70
Troubleshooting Charts 71

SPECIFICATIONS 73

CIRCUIT DESCRIPTION 75

CIRCUIT BOARD X-RAY VIEWS 78

CIRCUIT BOARD VOLTAGE CHART 80

IDENTIFICATION CHART 81

SCHEMATIC . . . . . (Fold-in)

WARRANTY . . . . . Inside Front Cover

CUSTOMER SERVICE . . . . . Inside Rear Cover

ManualsPlus.com

INTRODUCTION

The Heathkit Model HW-8 Transceiver is a solid-state, four-band QRP (low power) unit covering the CW portion of the eighty, forty, twenty, and fifteen meter amateur bands. The direct-conversion receiver features an RF stage, a balanced product detector, and an active audio filter with wide or narrow selectivity.

Other features include diode band switching which is controlled by pushbuttons and a method of premixing the variable and heterodyne oscillator signals to provide the same dial read-out on all bands. This also provides excellent stability and a fixed frequency offset on all bands while you are transmitting.

In addition to indicating Relative Power, the panel meter is used during alignment to assure proper adjustment of the transmitter tuned circuits.

The HW-8 Transceiver may be operated from the Heathkit Accessory Power Supply Model HWA-7-1, an equivalent low impedance power supply, or from batteries.

Refer to the "Kit Builders Guide" for complete information on unpacking, parts identification, tools, wiring, soldering, and step-by-step assembly procedures.

ManualsPlus.com

INITIAL TESTS

The following tests are performed on your Transceiver to make sure it is operating properly before you begin alignment. If you do not obtain the indicated results at any time, turn the Transceiver off and refer to the "In Case of Difficulty" section on Page 69.

You will need a pair of high impedance (about 2000 Ω) headphones, a key, and a 13.4-volt DC power supply to complete the Initial Tests and Alignment.

Refer to Figure 1-2 in the Illustration Booklet for the following steps.

( ) Set all of the front panel controls fully counterclockwise.

( ) Set the SIDETONE LEVEL control to the center of its rotation.

( ) Push the 7.0 MHz band switch in.

( ) Connect the 50 Ω dummy load to the ANTENNA socket on the rear panel.

( ) Connect a pair of headphones to the HEADPHONE jack on the rear panel.

( ) Connect the key to the KEY jack on the rear panel.

( ) Plug the power cable onto the POWER socket on the rear panel.

( ) Connect the power cable red lead to the + (positive) terminal and the black lead to the – (negative) terminal of a 13.4 VDC power source. CAUTION: Be sure you observe the correct polarity; otherwise the transistors in the Transceiver will be damaged.

( ) Turn the Transceiver power on by rotating the AF GAIN control clockwise until it "clicks" on.

( ) Turn the AF GAIN control to the center of its rotation. Noise should be heard in the headphones.

( ) Key the Transceiver. The relay should click and a sidetone should be heard in the headphones. Adjust the SIDETONE VOLUME control on the circuit board for a comfortable listening level. Release the key.

( ) Turn the AF GAIN control counterclockwise until it "clicks" off.

This completes the Initial Tests. Proceed to the "Alignment" section. Do not disconnect the power supply, key, or headphones from the Transceiver.

ManualsPlus.com

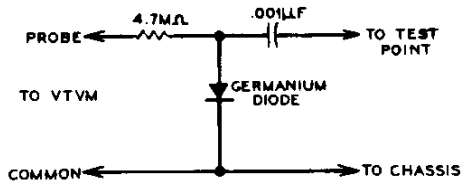

Figure 1-3

ManualsPlus.com

ALIGNMENT

The following alignment procedure requires the use of a calibrated Receiver capable of receiving 7.0 to 7.25 MHz, an RF Signal Generator, and a VTVM with an RF Probe. If a Signal Generator is not available, use an on-the-air signal. Figure 1-3 is a schematic of a simple RF Probe which you can make if one is not available. CAUTION: A cabinet shell must be installed on the bottom of the Transceiver before you start the following procedure.

Refer to Figure 1-2 in the Illustration Booklet for the following procedures.

HFO (Heterodyne Frequency Oscillator)

( ) Connect the RF probe of the VTVM to test point TP1. This is the lead at the indicated end of resistor R94, a 68 kΩ (blue-gray-orange) resistor.

( ) Turn the Transceiver on and press the 3.5 MHz pushbutton.

NOTE: You can reach the bottom slug in coils L17/L18 and L19/L21 by inserting the longer end of the alignment tool through the top slug; then on down to the bottom slug. Be careful when you do this so that you do not damage or turn the top slug.

( ) Use the smaller alignment tool and adjust the bottom slug in coil L17/L18 to obtain a peak reading on the VTVM. Then turn the slug an additional 1/4 turn clockwise. The VTVM should read approximately 0.6 volts.

( ) Press the 7.0 MHz pushbutton.

( ) Adjust the top slug in coil L17/L18 to obtain a peak reading on the VTVM. Then turn the slug an additional 1/4 turn counterclockwise. The meter should read approximately 0.6 volts.

( ) Press the 14.0 MHz pushbutton.

( ) Adjust the bottom slug in coil L19/L21 to obtain a peak reading on the VTVM. Then turn the slug an additional 1/4 turn clockwise. The VTVM should read approximately 0.6 volts.

( ) Press the 21.0 MHz pushbutton.

( ) Adjust the top slug in coil L19/L21 to obtain a peak reading on the VTVM. The VTVM should read approximately 0.6 volts. Then turn the slug 1/4 turn counterclockwise.

( ) Disconnect the VTVM from the Transceiver.

ManualsPlus.com

VFO (Variable Frequency Oscillator)

( ) Turn the calibrated receiver on and allow it to warm up. Tune the receiver to approximately 7.0 MHz.

( ) Press the 7.0 MHz pushbutton on the Transceiver.

( ) Connect one end of a suitable length of wire to the antenna terminal on the calibrated receiver. Loop the other end of this wire around coil L19/L21 as shown in inset drawing #2 on Figure 1-2.

( ) Turn the Transceiver on and allow it to warm up for at least 30 minutes before you proceed with the following adjustments.

NOTE: In the following steps, you will zero beat the calibrated receiver; first against its own crystal calibrator, and then against the Transceiver. A zero beat is a point where the two frequencies being combined (or beat against each other) are exactly the same. As you approach zero beat, the tone caused by the two combined frequencies will gradually decrease in pitch and volume until it stops. This point is very sharp so you must tune very carefully.

( ) Set the calibrated receiver's Function switch to the SSB or CW position.

( ) Tune the calibrated receiver to 7.0 MHz. Then turn on its crystal calibrator and zero beat the receiver frequency against the crystal calibrator frequency.

( ) Turn off the crystal calibrator. NOTE: Be careful that you do not change the setting of the receiver frequency.

( ) Refer to inset drawing #1 of Figure 1-2 and insert the metal blade (#205-778) into the small end of the plastic nut starter.

NOTE: Use the alignment tool that you made from the nut starter and blade for all trimmer adjustments. DO NOT use a screwdriver.

( ) Turn the Transceiver tuning dial to 0.

( ) Adjust trimmer capacitor C302B until you hear a zero beat from the calibrated receiver.

( ) Turn the Transceiver dial to 250.

( ) Turn the calibrated receiver dial to 7.250 MHz.

( ) Use the larger alignment tool to turn the slug in coil L9 until you hear a zero beat from the calibrated receiver. It may be necessary to turn down the calibrated receiver's AF gain control.

( ) Repeat the VFO alignment steps several times until the calibrated receiver's dial coincides with the 0 and 250 marks on the Transceiver's dial.

( ) Turn off the calibrated receiver and remove the wire from around coil L19/L21 in the Transceiver. The calibrated receiver will no longer be used.

MIXER AMPLIFIER

( ) Turn the Transceiver tuning dial to 100.

( ) Connect the RF Probe of the VTVM to test point TP2. This is the lead at the indicated end of R49, a 270 Ω (red-violet-brown) resistor.

( ) Press the 3.5 MHz pushbutton and adjust coil L13 for a peak reading on the VTVM.

( ) Press the 7.0 MHz pushbutton and adjust coil L14 for a peak reading on the VTVM.

( ) Press the 14.0 MHz pushbutton and adjust coil L15 for a peak reading on the VTVM.

( ) Turn the Transceiver tuning dial to 150.

NOTE: When you perform the next step, you may have to turn the coil slug several turns counterclockwise before you obtain a peak reading on the VTVM.

( ) Press the 21.0 MHz pushbutton and adjust coil L16 for a peak reading on the VTVM.

( ) Disconnect the RF Probe from Test point TP2.

ManualsPlus.com

TRANSMITTER

( ) Plug the previously prepared 50 Ω dummy load into the ANTENNA socket on the back of the Transceiver. (This may already be connected to the Transceiver.)

( ) Connect the key to the KEY jack on the back of the Transceiver. (This also may already be connected to the Transceiver.)

NOTE: Use the alignment tool that you made from the nut starter and blade for all trimmer adjustments. DO NOT use a screwdriver.

( ) Turn the screws in trimmers C95, C99, C103, and C106 clockwise until they stop turning. Do not force the screws.

( ) Turn the screw in trimmer C95 1/2 turn counterclockwise.

( ) Turn the screw in trimmer C99 1/8 turn counterclockwise.

( ) Turn the screw in trimmer C103 1 turn counterclockwise.

( ) Turn the screw in trimmer C106 1/4 turn counterclockwise.

( ) Make sure the TUNING dial is set to 100.

( ) Press the 3.5 MHz pushbutton.

( ) Set the LOADING control on the front panel to the 12 o'clock position.

NOTE: In the following steps, the adjustments will be quite broad.

( ) Key the Transceiver and adjust trimmer C95 for a maximum reading on the RELATIVE POWER meter.

( ) Key the Transceiver and adjust the LOADING control on the front panel to obtain a maximum reading on the RELATIVE POWER meter.

( ) Repeat the previous two steps.

( ) Press the 7.0 MHz pushbutton.

( ) Set the LOADING control to the 12 o'clock position.

( ) Key the Transceiver and adjust trimmer C99 to obtain a maximum reading on the RELATIVE POWER meter.

( ) Key the Transceiver and adjust the LOADING control on the front panel to obtain a maximum reading on the RELATIVE POWER meter.

( ) Repeat the previous two steps.

( ) Press the 14.0 MHz pushbutton.

( ) Set the LOADING control to the 12 o'clock position.

( ) Key the Transceiver and adjust trimmer C103 to obtain a maximum reading on the RELATIVE POWER meter.

( ) Key the Transceiver and adjust the LOADING control to obtain a maximum reading on the RELATIVE POWER meter.

( ) Repeat the previous two steps.

( ) Press the 21.0 MHz pushbutton.

( ) Set the LOADING control to the 12:00 o'clock position.

( ) Key the Transceiver and adjust trimmer C106 to obtain a maximum reading on the RELATIVE POWER meter.

( ) Key the Transceiver and adjust the LOADING control to obtain a maximum reading on the RELATIVE POWER meter.

( ) Repeat the previous two steps.

( ) Turn the Transceiver off.

( ) Disconnect the key and dummy load from the Transceiver.

ManualsPlus.com

RECEIVER

( ) Connect a pair of headphones to the HEADPHONES jack on the back of the Transceiver.

NOTE: You may use a nearby accurately calibrated transmitter for the following adjustments. If you do use one, connect a small piece of wire to the Transceiver's antenna socket. The small wire will act as a simple antenna. (You may also use an appropriate antenna.)

( ) Connect a signal generator to the ANTENNA socket on the back of the Transceiver.

( ) Turn the signal generator on and allow it to warm up.

( ) Set the Transceiver tuning dial to 250.

( ) Set the RECEIVER PRESELECTOR to 14.

( ) Set the RF GAIN control to MAX.

( ) Turn the Transceiver on and adjust the AF GAIN control for a comfortable listening level.

NOTE: In the following steps, as you approach the point of resonance of a trimmer capacitor or coil, the sound from the headphones will increase. As this occurs, decrease the output of the signal generator to the lowest level that you can still hear. This will prevent overloading the receiver.

( ) Press the 3.5 MHz pushbutton.

( ) Adjust the signal generator frequency to approximately 3.750 MHz or until you hear the signal in the headphones. The output of the generator may have to be quite high.

( ) Alternately adjust trimmers C3 and C16 for maximum sound in the headphones.

( ) Press the 7.0 MHz pushbutton.

( ) Adjust the signal generator frequency to approximately 7.25 MHz or until you hear it in the headphones. The output of the generator may have to be quite high.

( ) Alternately adjust trimmers C6 and C19 for maximum sound in the headphones.

( ) Set the Transceiver tuning dial to 100.

( ) Adjust the signal generator frequency to approximately 7.100 MHz or until you hear it in the headphones.

( ) Adjust the RECEIVER PRESELECTOR for maximum sound in the headphones.

( ) Readjust trimmer C6 for maximum sound in the headphones. NOTE: Do not adjust trimmer C19.

( ) Press the 14.0 MHz pushbutton.

( ) Set the Transceiver tuning dial to 250.

( ) Set the RECEIVER PRESELECTOR to 14.

( ) Adjust the signal generator frequency to approximately 14.25 MHz or until you hear it in the headphones.

( ) Alternately adjust trimmers C7 and C22 for maximum sound in the headphones.

( ) Press the 21.0 MHz pushbutton.

( ) Adjust the signal generator frequency to approximately 21.25 MHz or until you hear it in the headphones.

( ) Alternately adjust trimmers C9 and C24 for maximum sound in the headphones.

( ) Turn the Transceiver off.

( ) Disconnect the signal generator from the Transceiver.

This completes the "Transceiver Alignment," Proceed to "Final Assembly."

ManualsPlus.com

OPERATION

Refer to Figure 1-2 for the following steps.

( ) Plug the power cable onto the POWER socket on the rear panel.

( ) Connect the power cable red lead to the + (positive) terminal and the black lead to the – (negative) terminal of a 13.4 VDC power source. CAUTION: Be sure you observe the correct polarity; otherwise the transistors in the Transceiver will be damaged.

( ) Connect a key to the KEY jack on the rear panel.

( ) Connect an antenna to the ANTENNA socket on the rear panel. (See the following information on antennas.)

( ) Connect a pair of headphones to the HEADPHONES jack on the rear panel.

ANTENNAS

The Transceiver should be used with 50 ohm to 75 ohm antennas having a low VSWR. Lightweight hookup wire dipoles and inverted vee's are sufficient for solid contacts. They can be quickly strung up for camping trips and emergency operation, as well as field day use. However, antennas of the beam and quad type will provide a significant improvement in performance, much more so than for medium to high-power rigs.

The "ARRL Antenna Book" is commonly available and includes comprehensive reference work on transmission lines and antennas. Other similar handbooks for the amateur are offered for sale and can often be found in a public library.

( ) Push in the Band switch for the band you intend to operate on.

( ) Turn the Transceiver on by rotating the AF GAIN control clockwise until it "clicks" on. Then continue to rotate the control clockwise to a comfortable listening level.

( ) Adjust the Main Tuning to the portion of the band where you intend to operate.

NOTE: When tuning across the band, always go to the high end of the band first and tune down to the low end. This is to assure that you will be on the high side of the zero beat when listening to a signal. Otherwise you may answer a CQ on the low side of zero beat and your transmitting frequency will be too low.

( ) Listen to the headphones and adjust the RECEIVER PRESELECTOR for maximum signal loudness (fully clockwise for 15 and 20 meter operation).

( ) Key the Transceiver and rotate the LOADING control to obtain a maximum meter indication. The Transceiver is now ready for on-the-air operation.

ManualsPlus.com

OPERATING HINTS

When operating a QRP (low power) rig, your transmitted signal may be below the signal level preferred by most operators. Generally, lower power signals lose out unless a few simple techniques are followed. In many cases, listening for a CQ is more acceptable since your signal has a greater chance of being copied this way. Or you can try to contact a station just after he completes a contact. Also, be sure that you are on the high side of zero beat when you transmit as described previously.

Emergency operation is sometimes a necessity and always unexpected. The Transceiver is well suited for these situations if an antenna is available. A power source is usually no problem since any automobile battery or lantern batteries of the appropriate voltage can provide hours of dependable operation. Refer to the "Specifications" section for voltage and current requirements.

You can vary the hold-in time of the antenna relay by adjusting BREAK-IN DELAY control R68 on the main circuit board. Adjust this control to obtain the desired delay after you have released the key.

ManualsPlus.com

Troubleshooting Chart

The following chart lists conditions and possible causes of several specific malfunctions. If a particular part is mentioned (Q7 for example) as a possible cause, check that part to see that it is installed and/or wired correctly. It is also possible, on rare occasions, for a part to be faulty and require replacement.

CONDITION	POSSIBLE CAUSE
No signals can be received on any band. However, headphone noise is heard when the AF Gain control is advanced.	1. Transistor Q1 or IC1 is incorrectly installed or shorted.
No signals are received on the 3.5 MHz band.	1. Diode D1 or D5 incorrectly installed or shorted.
No signals are received on the 7.0 MHz band.	1. Diode D2 or D6 incorrectly installed or shorted.
No signals are received on the 14.0 MHz band.	1. Diode D3 or D7 incorrectly installed or shorted.
No signals are received on the 21.0 MHz band.	1. Diode D4 or D8 incorrectly installed or shorted.
No sound of any kind from the headphones.	1. Transistor Q201 or IC2 incorrectly installed or shorted. 2. Phone jack J301 incorrectly wired.
Heterodyne frequency oscillator does not operate on any band.	1. Transistor Q6 incorrectly installed or shorted.
Heterodyne frequency oscillator does not operate on one band. (Other bands are OK.)	1. The associated diodes for the inoperative band (D22 thru D29) may be incorrectly installed or shorted. 2. The crystal for the inoperative band may be faulty.

ManualsPlus.com

TROUBLESHOOTING CHART (cont'd.)

CONDITION	POSSIBLE CAUSE
Sidetone does not operate.	1. Diode D21 or IC2 is incorrectly installed or shorted.
Relay does not operate.	1. Transistor Q12 or Q13 is incorrectly installed or shorted.
Relative power meter does not operate.	1. Trimmer capacitors, C95, C99, C103, C106, and C303 are not properly adjusted. 2. Transistor Q8, Q9, or diode D301 are incorrectly installed or shorted.
Relative power meter does not operate on one band only.	1. The trimmer capacitor for that band (C95, C99, C103, or C106) is not properly adjusted. 2. The diode associated with that band is incorrectly installed or shorted. (Diodes D16, D17, D18, D19, D31, D32, D33, D34, D35, D36, D37, or D38.) 3. The heterodyne frequency oscillator is not properly tuned for that band.

ManualsPlus.com

SPECIFICATIONS

TRANSMITTER

DC Power Input	
80 meters	3.5 watts.
40 meters	3.0 watts.
20 meters	3.0 watts.
15 meters	2.5 watts.
Frequency Control	Built-in VFO.
Output Impedance	50 Ω unbalanced.
Sidetone	Built-in, adjustable volume.
Spurious and Harmonic Levels	At least 35 db down.
Transmit Frequency Offset	Approximately 750 Hz lower, fixed on all bands.

RECEIVER

Receiver Type	Direct conversion with RF amplifier, balanced product detector, and active audio filter.
Sensitivity	1 microvolt or less for 10 dB $\frac{S+N}{N}$. 0.2 μV provides readable signal.
Selectivity	Wide – 750 Hz @ 6 dB down. Narrow – 375 Hz @ 6 dB down.
Passband Center Frequency	750 Hz.
Type of Reception	CW.
Audio Output Impedance	1000 Ω nominal.

ManualsPlus.com

GENERAL

Frequency Coverage	80 meters, 3.5 to 3.75 MHz. 40 meters, 7.0 to 7.25 MHz. 20 meters, 14.0 to 14.25 MHz. 15 meters, 21.0 to 21.25 MHz.
Frequency Stability	Less than 150 Hz/hour drift after 60 minute warm-up.
Frequency Generation	Premixed VFO and HFO.
Power Requirements	13.4 volts DC, nominal. 90 mA receive mode, and 430 mA transmit mode.
Dimensions	9-1/4" wide x 8-1/2" deep x 4-1/4" high, including knobs and feet. (23.5 cm wide x 21.6 cm deep x 10.8 cm high.)
Weight	4 lbs. (1.8 kg.)

The Heath Company reserves the right to discontinue products and to change specifications at any time without incurring any obligation to incorporate new features in products previously sold.

ManualsPlus.com

CIRCUIT DESCRIPTION

Refer to the Schematic Diagram and the Block Diagram in the Illustration Booklet while you read the following description.

The Transceiver operates in the CW portion of the 15, 20, 40, and 80 meter amateur bands. The frequencies are generated by the combined efforts of the VFO and the heterodyne oscillator for both transmit and receive operation. In the following paragraphs, each part of the Transceiver circuitry will be discussed in detail.

VFO

FET (field effect transistor) Q2 and its associated circuitry forms a Hartley oscillator. Part of coil L9, tuning capacitor C302, and temperature conpensating capacitors C44, C45, C46, C47, C48, C49, and C51 determine the frequency of the oscillator. The other part of L9 is a feedback circuit that couples part of the generated signal back to the gate of FET Q2 to help sustain oscillation. The VFO generates frequencies from 8.645 MHz to 8.895 MHz.

Diode D9 clamps the positive-going half of the signal to prevent FET Q2 from reaching high peak operating currents. This helps to keep the VFO from generating harmonic frequencies.

The signal from the VFO is coupled through capacitor C54 and C56 to emitter follower transistor Q3. This transistor provides isolation for the VFO. The output from the emitter of transistor Q3 is coupled to the balanced mixer.

When the Transmitter is keyed, diode D11 effectively adds capacitor C55 to the circuit which causes a shift in the VFO frequency. This produces a fixed offset during transmit. Zener diode ZD1 provides voltage regulation for the drain of FET Q2.

HFO

The HFO operates at any of four crystal-controlled frequencies, depending on which band switch is depressed. These frequencies, when mixed with the VFO frequency, establish the four bands of operation.

When the 3.5 MHz pushbutton switch on the front panel is depressed, crystal Y1 and its associated circuitry are electrically connected to transistor Q6 to form the HFO. At this time power is supplied to the circuit through resistor R78 and crystal Y1 oscillates at a frequency of 12.395 MHz, which is coupled through diode D22 to transistor Q6. A part of the signal from the collector of transistor Q6 is coupled back through diode D23 and through the tuned circuit composed of coil L17 and capacitor C116 to sustain oscillation. Diodes D22 and D23 prevent DC from activating this crystal circuit when a different crystal circuit is being used. The HFO operates similarly on the other bands.

The HFO signal is coupled through capacitor C127 to emitter follower transistor Q7. This transistor provides isolation for the oscillator circuit to prevent loading. From the emitter of transistor Q7, the signal is coupled to the balanced mixer.

ManualsPlus.com

BALANCED MIXER

Coils L11 and L12 and diodes D12, D13, D14, and D15 form a balanced mixer which combines the VFO and HFO signals. This produces four signals at the output of the balanced mixer. These are the VFO frequency plus the HFO frequency, the HFO frequency minus the VFO frequency, the VFO frequency, and the HFO frequency. The only frequency that we are concerned with is the HFO frequency minus the VFO frequency.

MIXER AMPLIFIER

The four signals are then coupled through capacitor C61 to FET Q4 where they are amplified and then coupled to the four diode-selected filter circuits. Only one filter circuit is electrically connected to the circuit on any one band. For example, if the 3.5 MHz pushbutton switch on the front panel is depressed, coil L13 and capacitor C64 are electrically connected to the circuit. This tuned circuit filters out the three unwanted signals and leaves only the "on-frequency" signal, which is coupled through capacitor C73 to transistor Q5.

Transistor Q5 is connected as an emitter follower which provides isolation and impedance matching. The output from the emitter of Q5 is coupled through C75 to transistor Q8 and also through capacitor C28 to balanced product detector IC1.

TRANSMITTER

The output of driver transistor Q8 is resonance-tuned by the appropriate diode-switched tuned circuit. Here again, there are four tuned circuits. Only one tuned circuit is electrically connected to the output of Q8 for each band of operation. For the 3.5 MHz band, coil L22 and capacitor C77 and C78 are connected through diodes D31 and D35.

The output from the driver is coupled to final amplifier transistor Q9. Here the signal is amplified and then coupled through the appropriate switch (part of the depressed front panel switch) to the output circuit, which acts as a bandpass filter and impedance matching network.

Zener diode ZD2 prevents excessive collector RF voltage from destroying transistor Q9 if the operator should mistakenly key the transmitter when there is no load present on the output of the Transmitter, or when the SWR is high.

Capacitor C303 is the Loading control and is adjusted for maximum power on the relative power meter. The RF power output is then coupled through antenna switching relay RL1 and to antenna jack J302. A small part of the RF power output is coupled through resistor R302, and capacitor C304 to the relative power meter. This output power is rectified by diode D301.

KEYING

Transistor Q11 provides a keying function when the key is depressed. This transistor provides the keying for the transmitter driving stage, the sidetone oscillator, the break-in delay switching; and the receiver muting. When the key is depressed, the keying transistor places a B+ voltage on the collector of driver transistor Q8 and switches it on. The transmitter is then keyed and provides an RF output signal.

Also, when the key is depressed, pin 11 of sidetone oscillator IC2D is connected to ground through resistor R72 and diode D21 and the key to cause the oscillator to turn on and generate an audible tone. This tone is coupled through capacitor C111, resistor R76, Sidetone Level Adjust control R77, and capacitor C113 to the headphone jack.

BREAK-IN DELAY

Transistors Q12 and Q13 provide an adjustable delay circuit for antenna switching and receiver muting. The emitter of break-in delay transistor Q12 is connected to ground when the key is depressed. This effectively puts the collector of Q12 at ground potential, which causes relay driver transistor Q13 to energize relay RY1 and switch the antenna from receive to transmit. Relay RY1 will remain energized until the base voltage of relay driver transistor Q13 increases to the B+ voltage. The key also turns transistor Q11 on and off which switches the Transceiver between transmit and receive.

ManualsPlus.com

The B+ voltage at the relay is used to switch VFO offset diode D11 to provide offset during transmit and also to switch the mute transistor Q14 on. This effectively connects the input of the audio preamplifier stage to ground, thus muting the receiver during transmit.

When the key is released, the emitter and collector voltages of Q12 try to increase toward B+. However, at this time, capacitor C92 is discharging through delay control R68, which keeps the relay energized. After capacitor C92 has discharged and the voltage on the collector of Q13 returns to normal, the relay opens. The amount of time required for capacitor C92 to discharge is adjustable through delay control R68.

RECEIVER CIRCUITS

The signals received by the antenna are coupled through RF Gain control R302 and through the appropriate front panel pushbutton switch (for example we will say the 3.5 MHz band switch). From here, the signal is coupled through coil L1 and diode D1 to RF amplifier Q1. Coil L1 and capacitors C1, C3, and C301A form a resonant circuit. Diode D1 provides the electrical switching to connect the signal to FET Q1 when the 3.5 MHz switch is depressed.

The signal is amplified by FET Q1 and is filtered by one of the coil-capacitor networks. (Each network serves as a filter for one of the four bands.) This filtered signal is then coupled through capacitor C25 to pin 1 of IC1, the balanced product detector. IC1 mixes the premixed VFO signal with the received signal to produce an audio signal. This signal is present at pin 9 of IC1 and is coupled through capacitors C33, C35, and resistor R19 to pin 3 of IC2A.

IC2A and IC2B are active audio filters. The audio signal passes through these two stages of audio filtering, which removes any RF signal and produces an audio signal that has good audio bandwidth and excellent skirt selectivity. There are two stages of audio selectivity which are selected by Selectivity switch SW302 on the front panel.

From the Selectivity switch, the signal is coupled through capacitor C38 to IC2C. IC2C is an audio preamplifier which amplifies the signal and then couples it through resistor R202 and capacitor C201 to transistor Q201. Transistor Q201 further amplifies the signal and then it is coupled through capacitor C204 to headphone jack J301.

ManualsPlus.com

CIRCUIT BOARD X-RAY VIEWS

NOTE: To find the PART NUMBER of a component for the purpose of ordering a replacement part:

A. Find the circuit component number (R5, C3, etc.) on the "Circuit Board X-Ray Views."

B. Locate this same number in the "Circuit Component Number" column of the "Parts List" in the front of this Manual.

C. Adjacent to the circuit component number, you will find the PART NUMBER and DESCRIPTION which must be supplied when you order a replacement part.

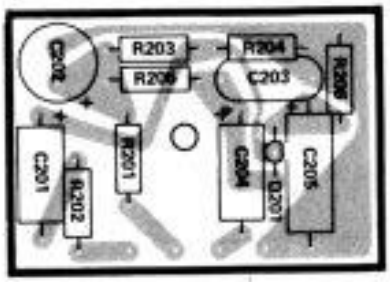

AF AMPLIFIER CIRCUIT BOARD
(Viewed from foil side)

ManualsPlus.com

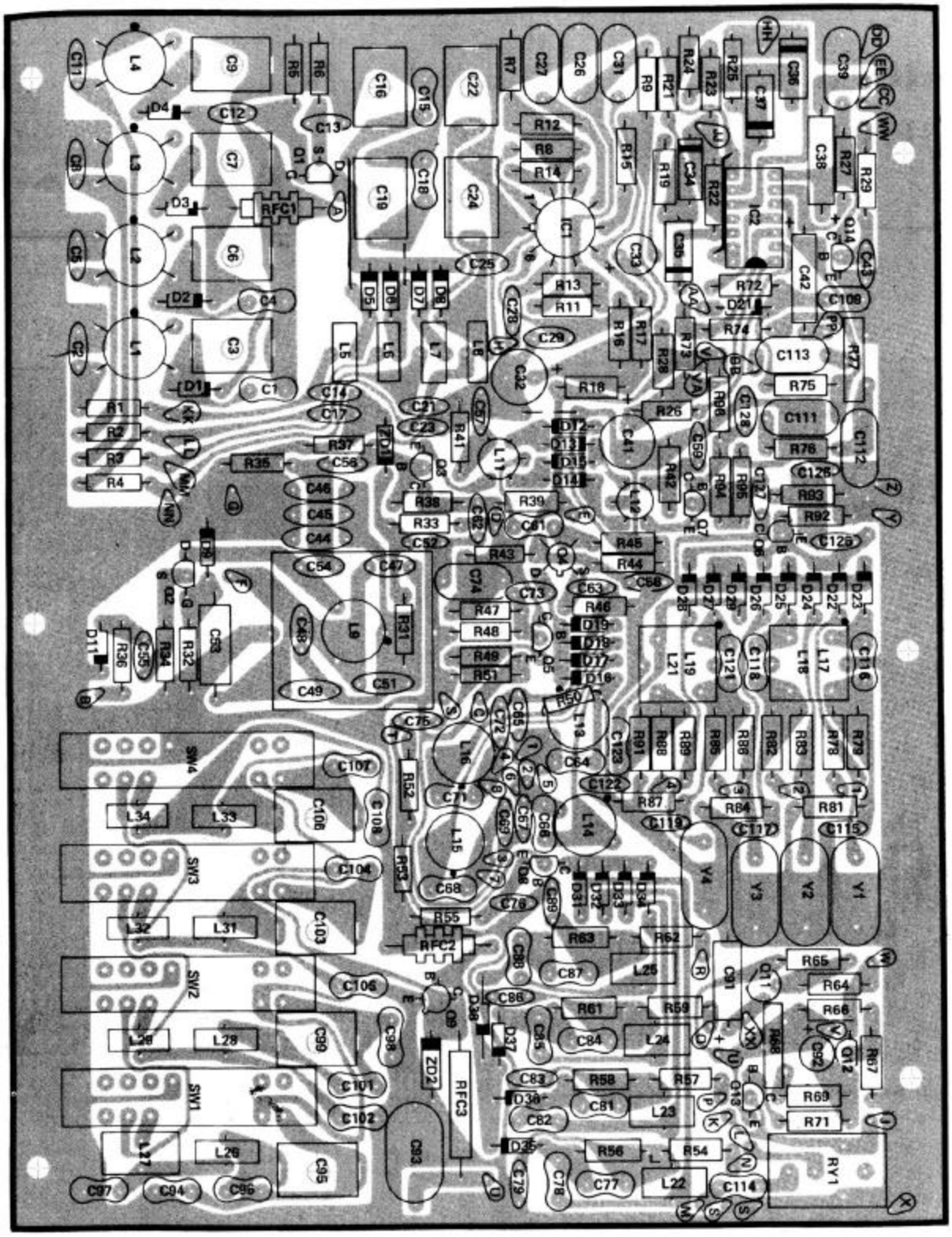

MAIN CIRCUIT BOARD
(Viewed from foil side)

ManualsPlus.com

CIRCUIT BOARD VOLTAGE CHART

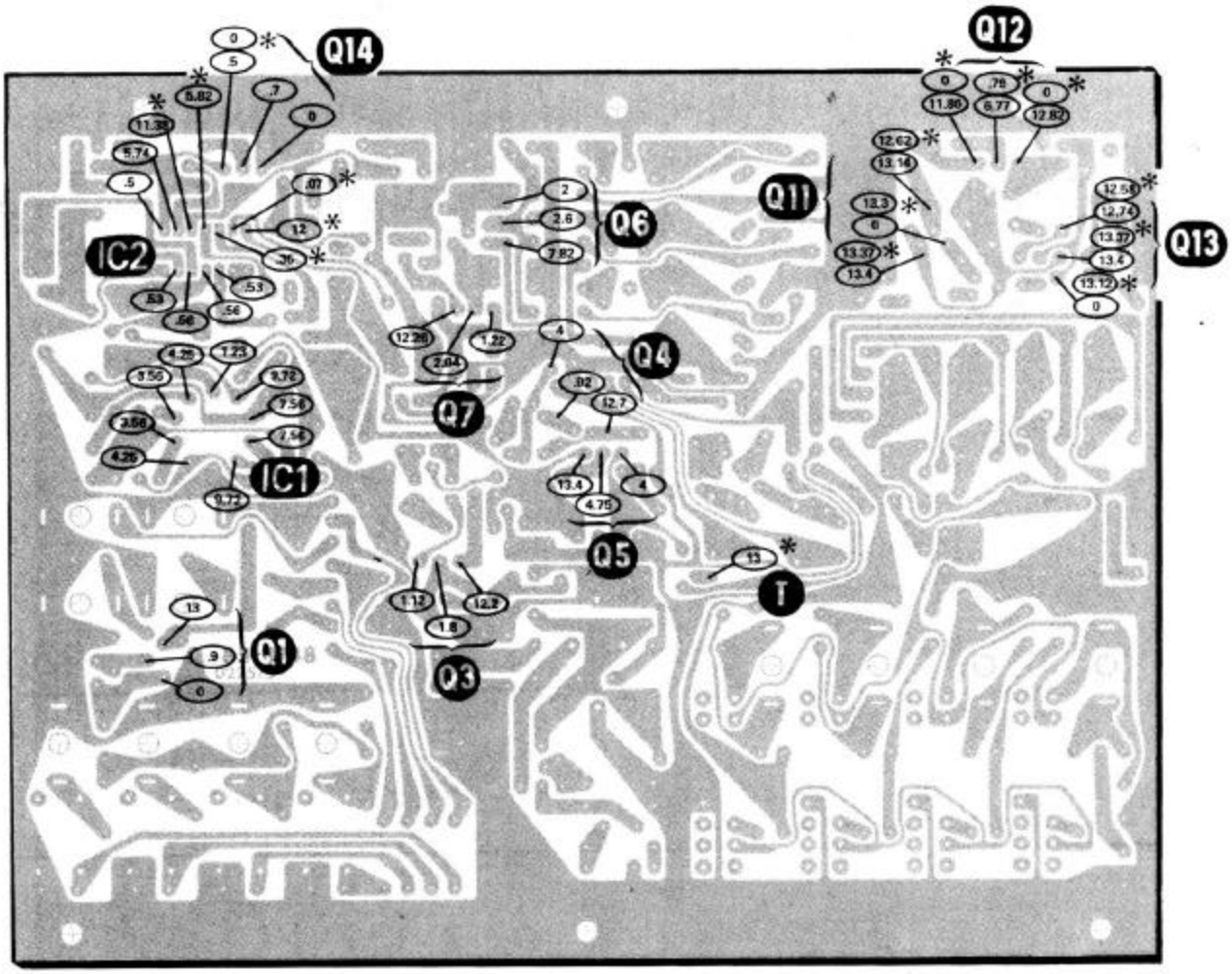

THIS SYMBOL INDICATES A RECEIVE-MODE DC VOLTAGE MEASURED FROM THE POINT INDICATED TO CHASSIS.

* THIS SYMBOL INDICATES A TRANSMIT-MODE DC VOLTAGE MEASURED FROM THE POINT INDICATED TO CHASSIS.

ManualsPlus.com

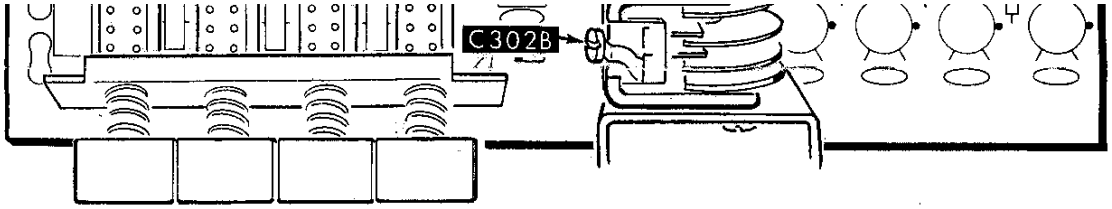

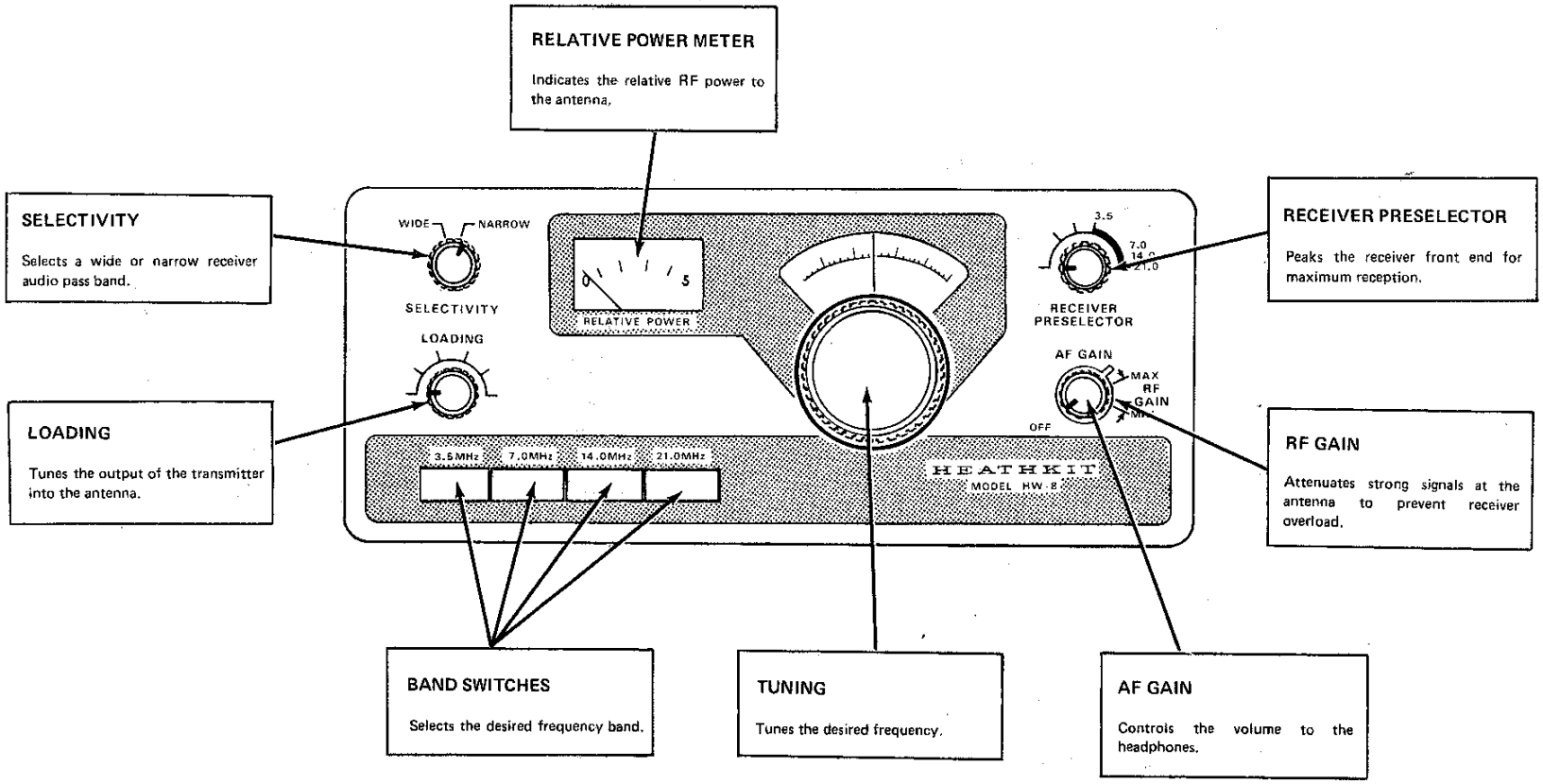

Figure 1-2

ManualsPlus.com

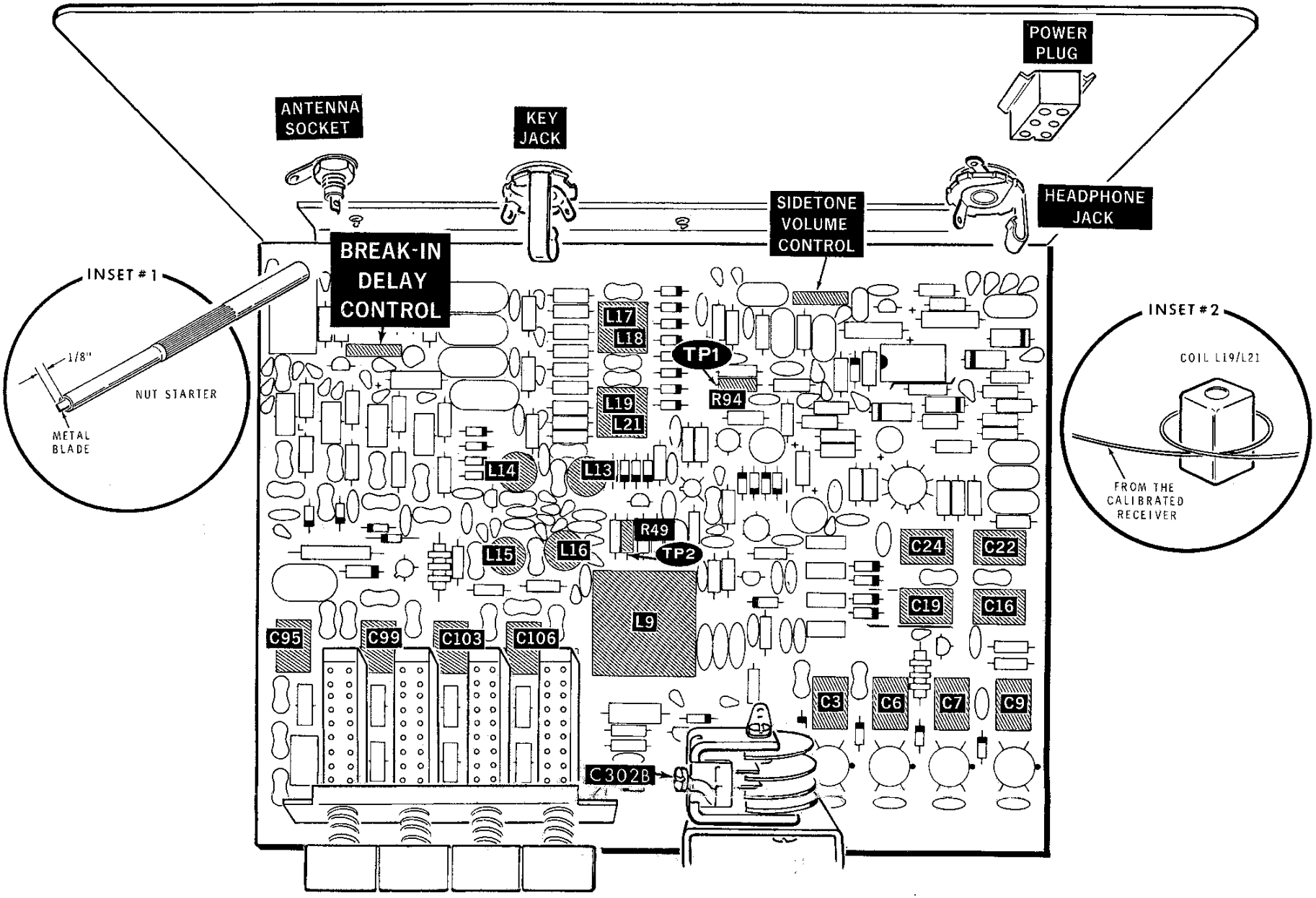

RELATIVE POWER METER

Indicates the relative RF power to the antenna.

ManualsPlus.com

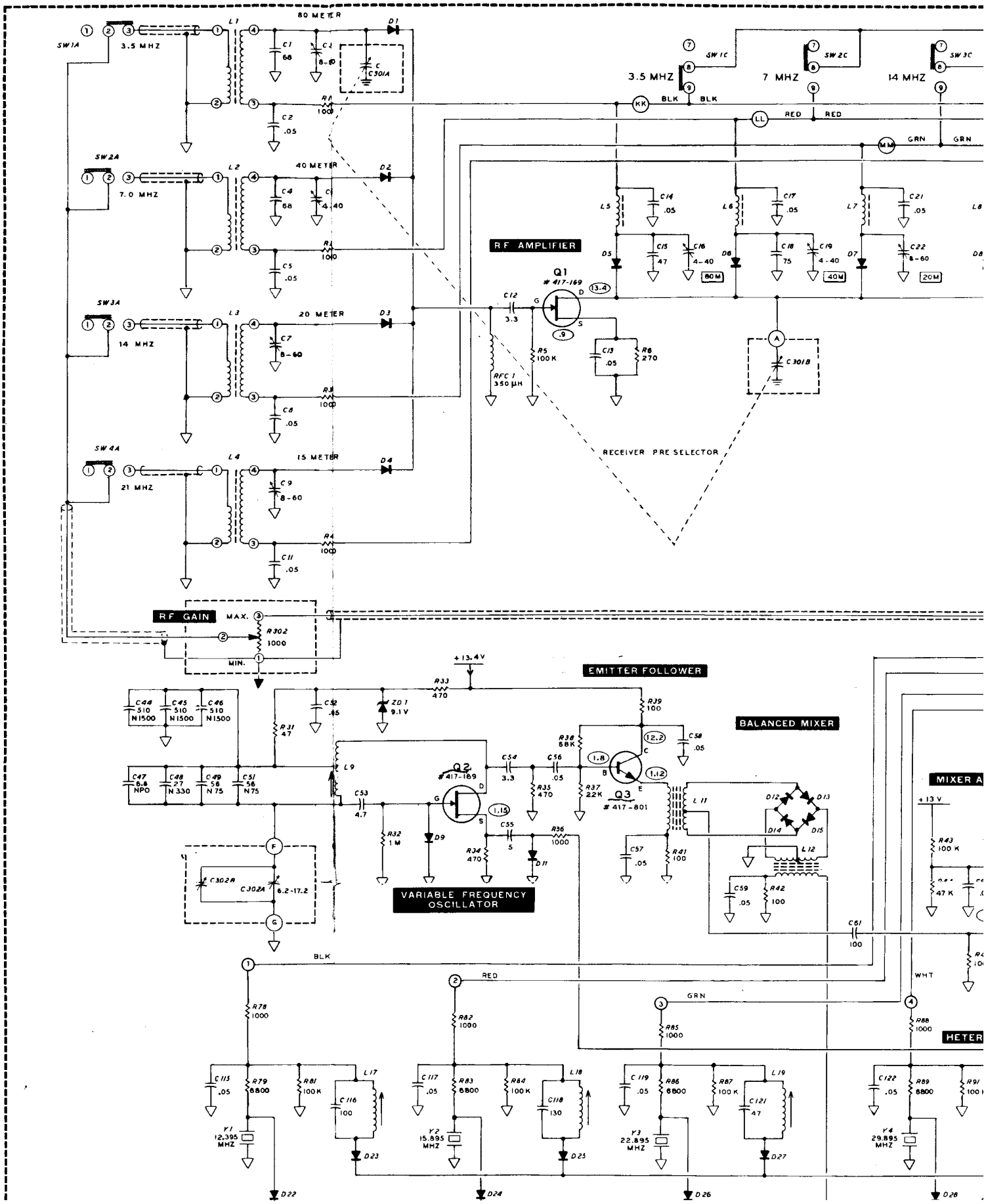

ManualsPlus.com

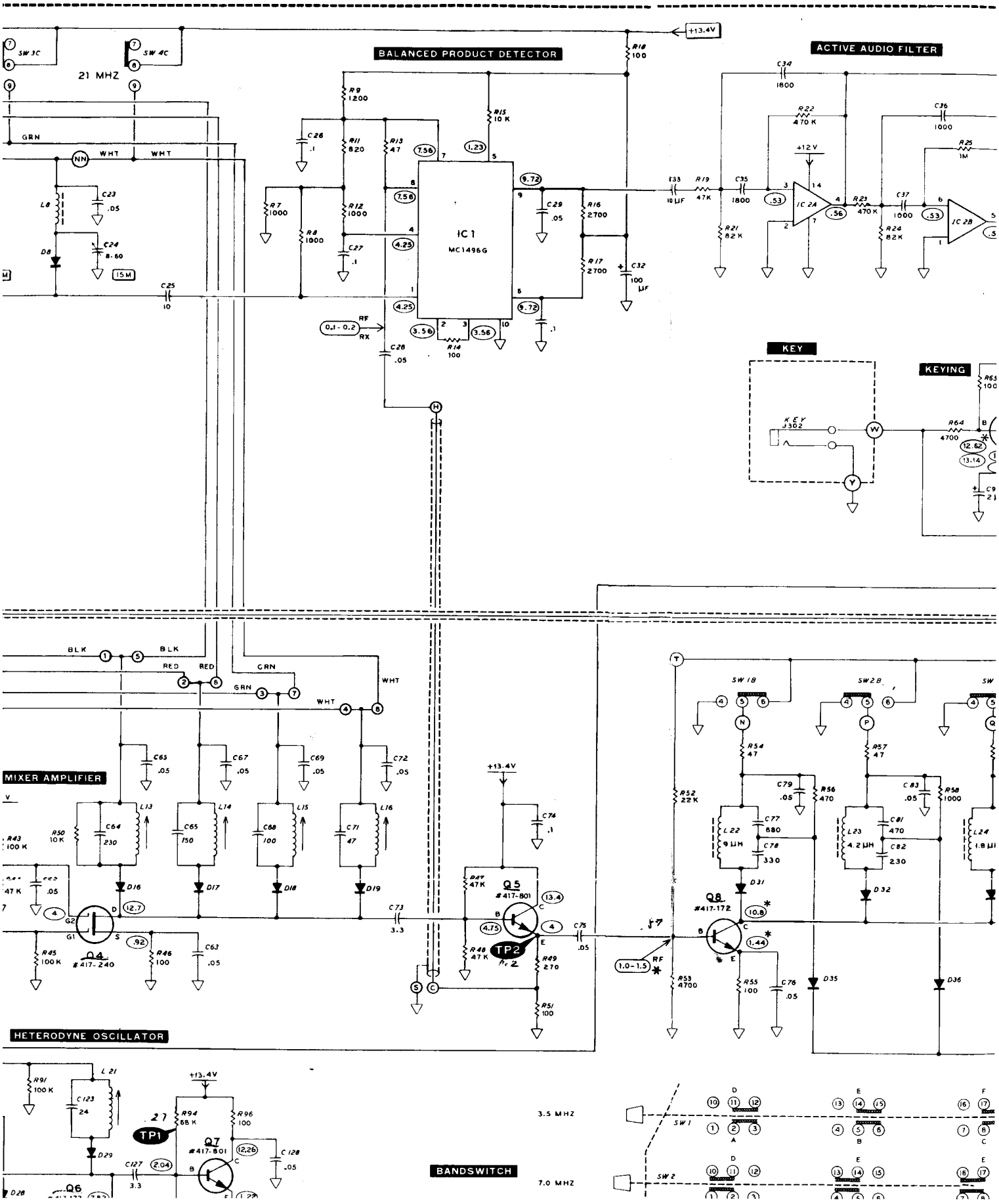

ManualsPlus.com

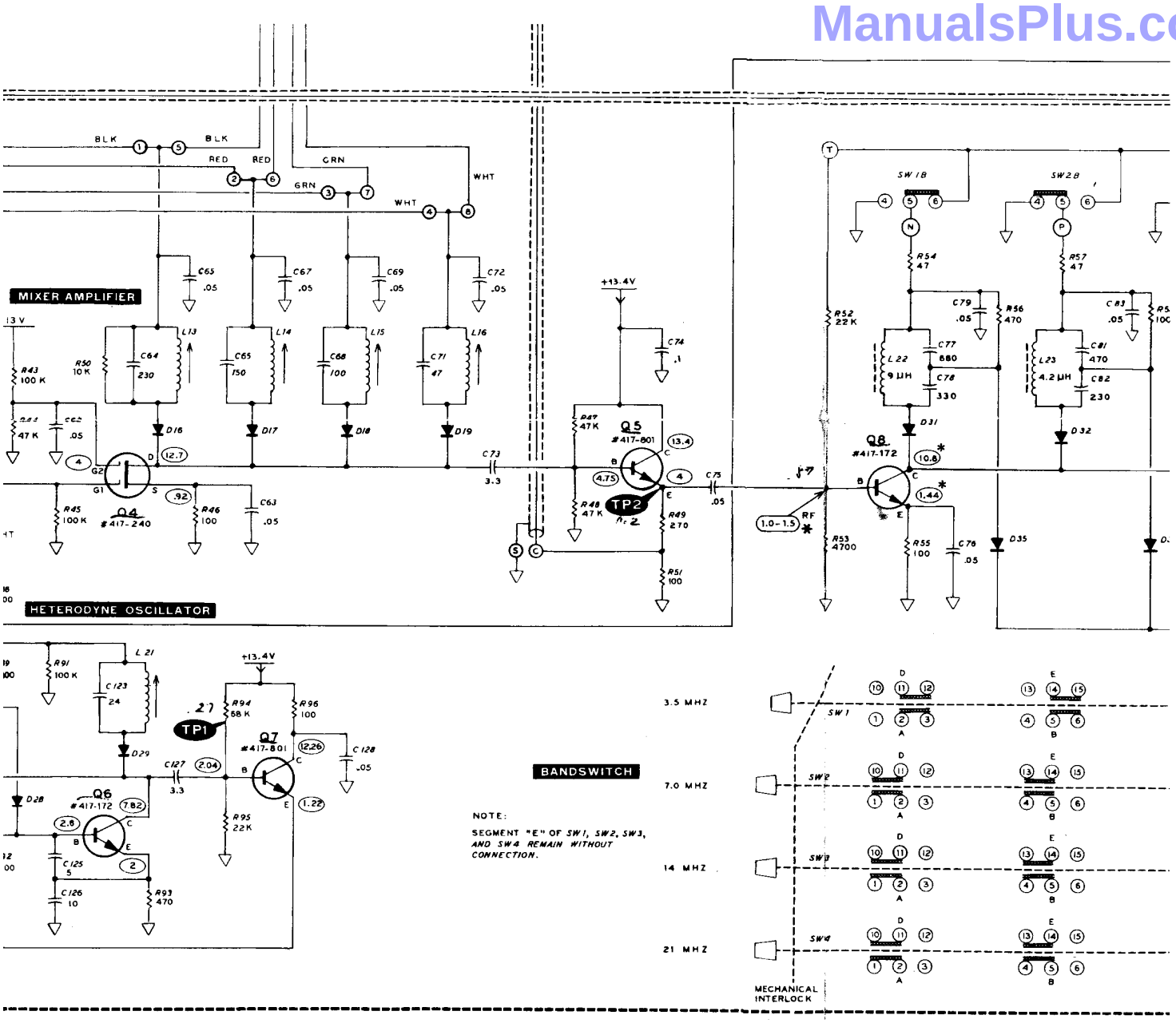

Q9
Q8

Q-7 Dia.

Q-5

Q-9 Dia. 3V RF

ManualsPlus.com

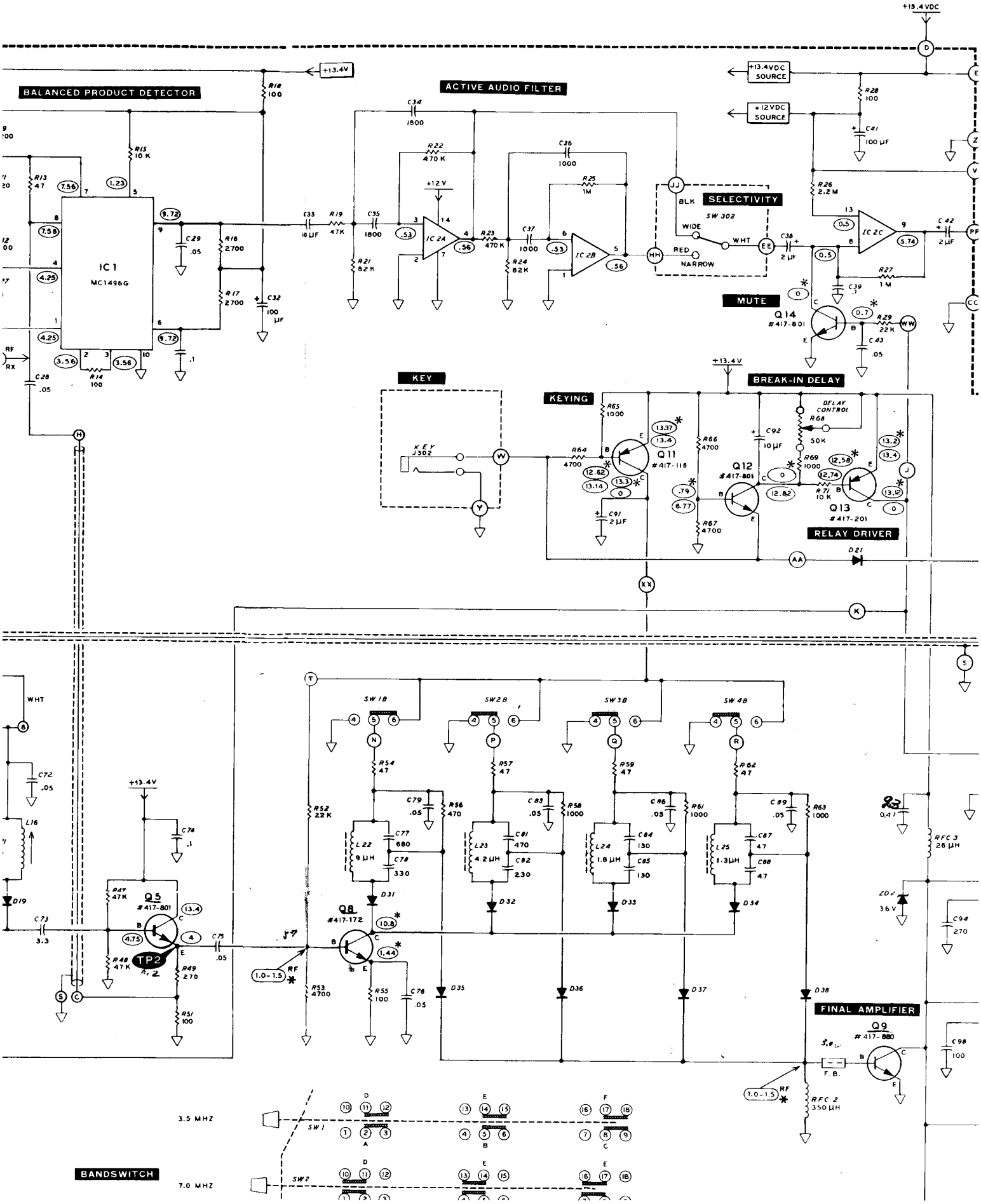

ManualsPlus.com

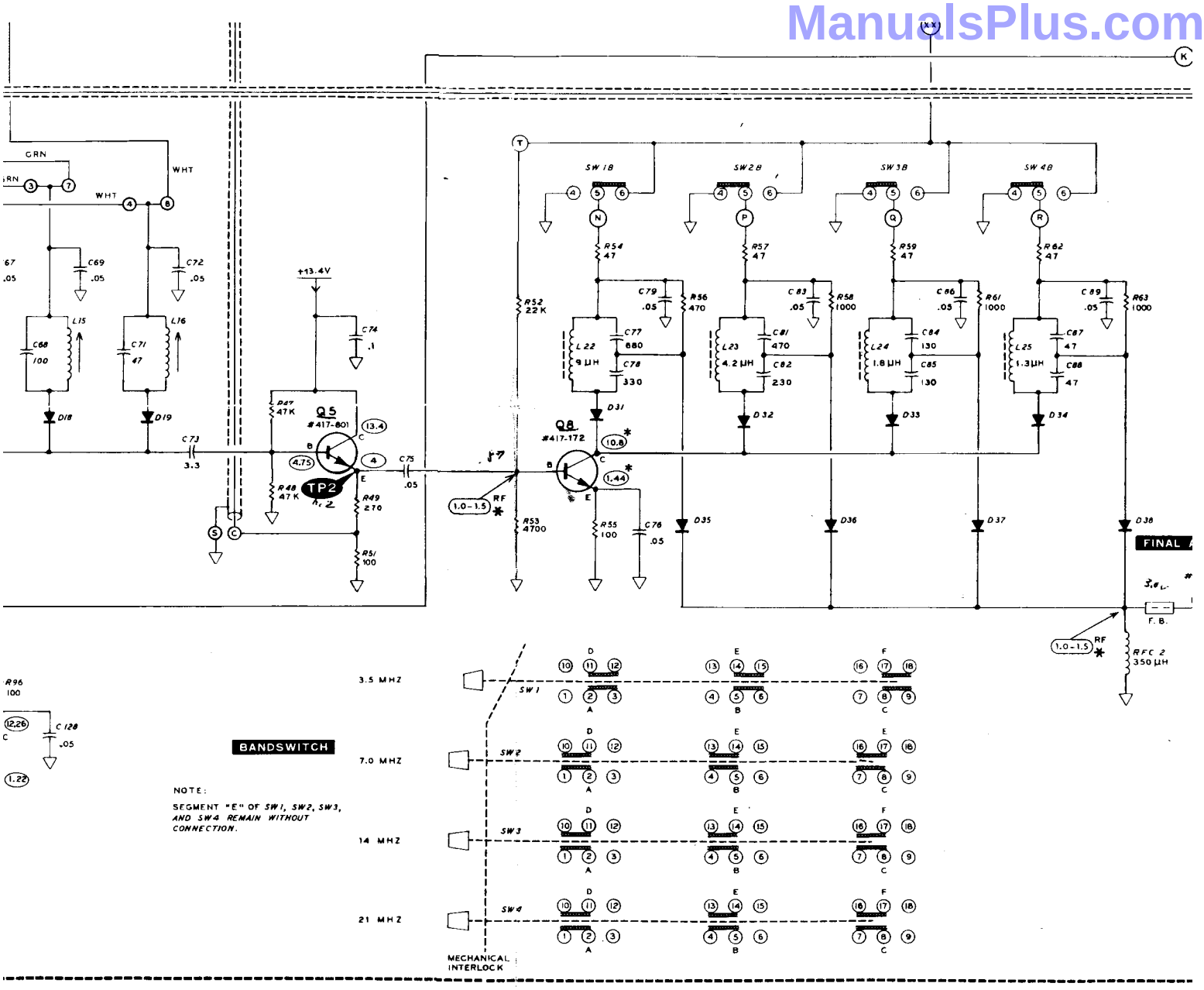

NOTE:

SEGMENT "E" OF SW1, SW2, SW3, AND SW4 REMAIN WITHOUT CONNECTION.

.87

Q-7 base .27

TP2

Q-5 1.2

Q-5 base 8V RF
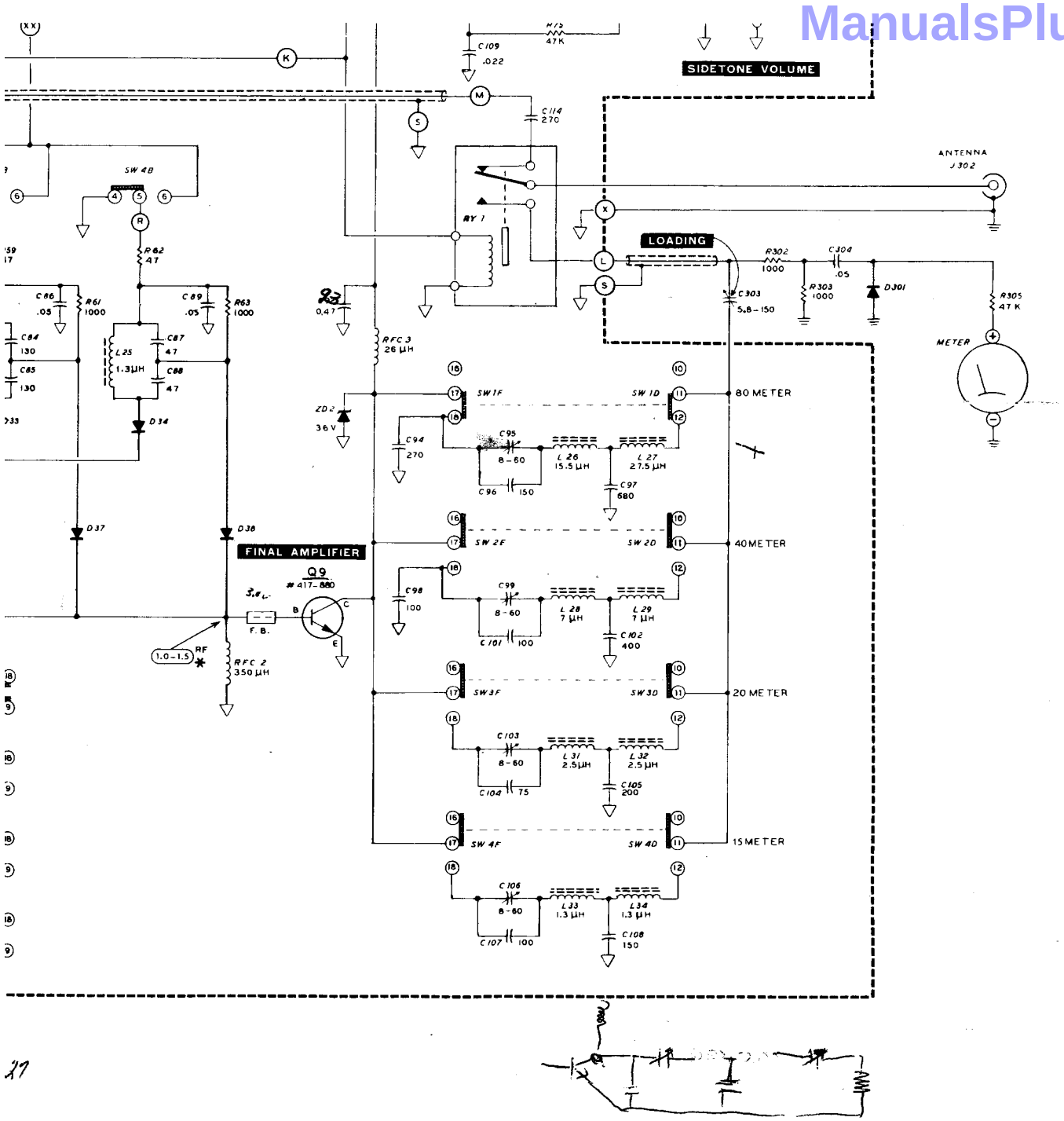
ManualsPlus.com