ManualsPlus.com

RESISTANCE CHART

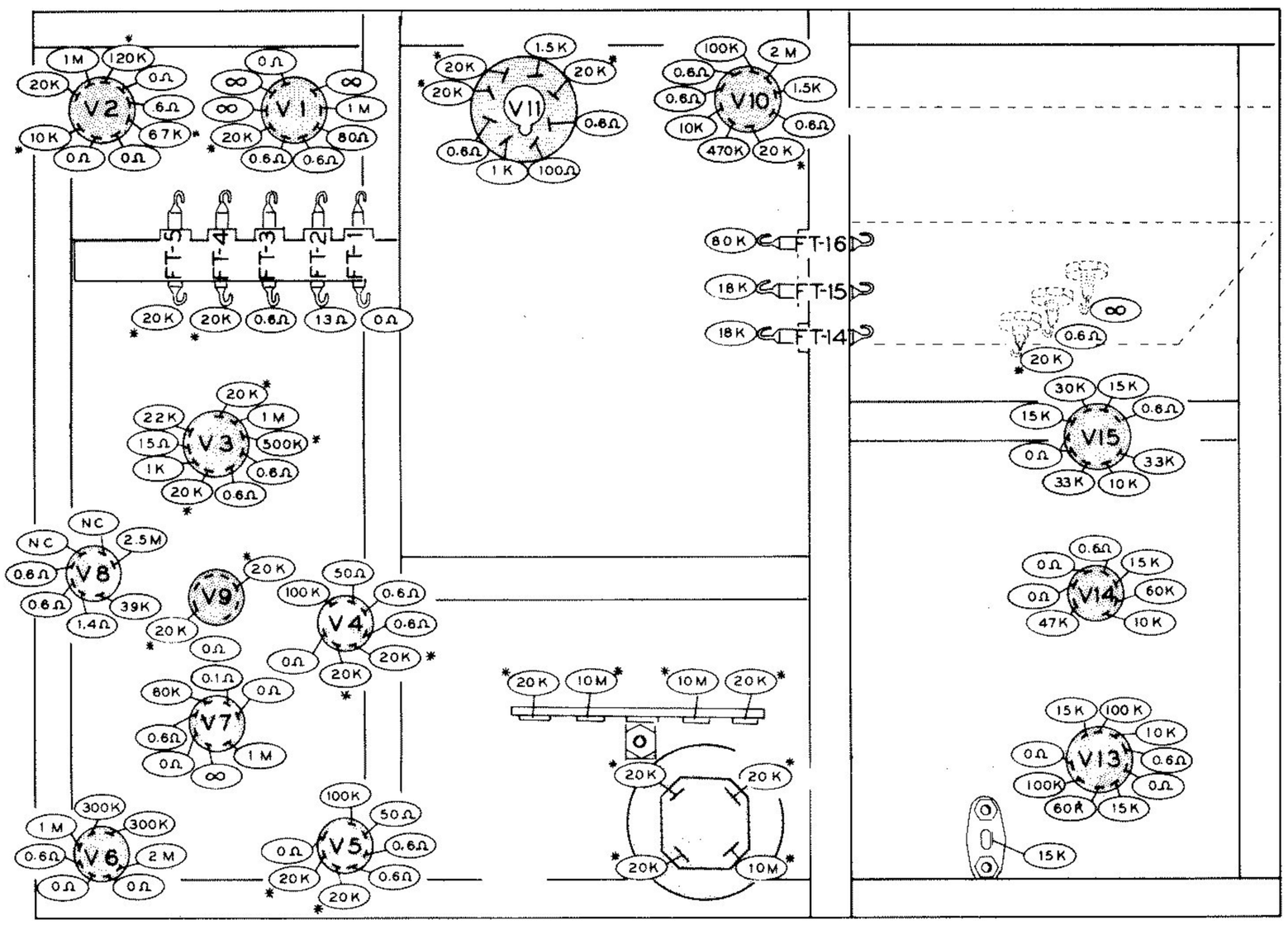

CONTROLS ARE SET AS FOLLOWS:

AVC : OFF
RF GAIN : FULL CW
BFO/PITCH : PUSHED IN AND FULL CCW
ANL/SQUELCH : PUSHED IN AND FULL CCW
FINAL TUNE : FULL CCW
SPOT : OFF
CW-AM : AM
AUDIO: POWER OFF
X2-X3-X4-VFO : X4
RCVR TUNE : DIAL POINTER SET AT 50 MC
TRANS. TUNE : DIAL POINTER SET AT 50 MC
COUPLING : FULL CCW

LOADING : CAPACITOR PLATES FULL MESHED
MOD. LEVEL : PUSHED IN AND FULL CCW
MOD. MONITOR : OFF
POWER CORD DISCONNECTED

**IF READING IS ABNORMALLY LOW - REVERSE METER PROBES.

M = Meg
K = 1,000
* MINIMUM READING AFTER 5 SECONDS, WITH ALL TUBES IN SOCKETS.

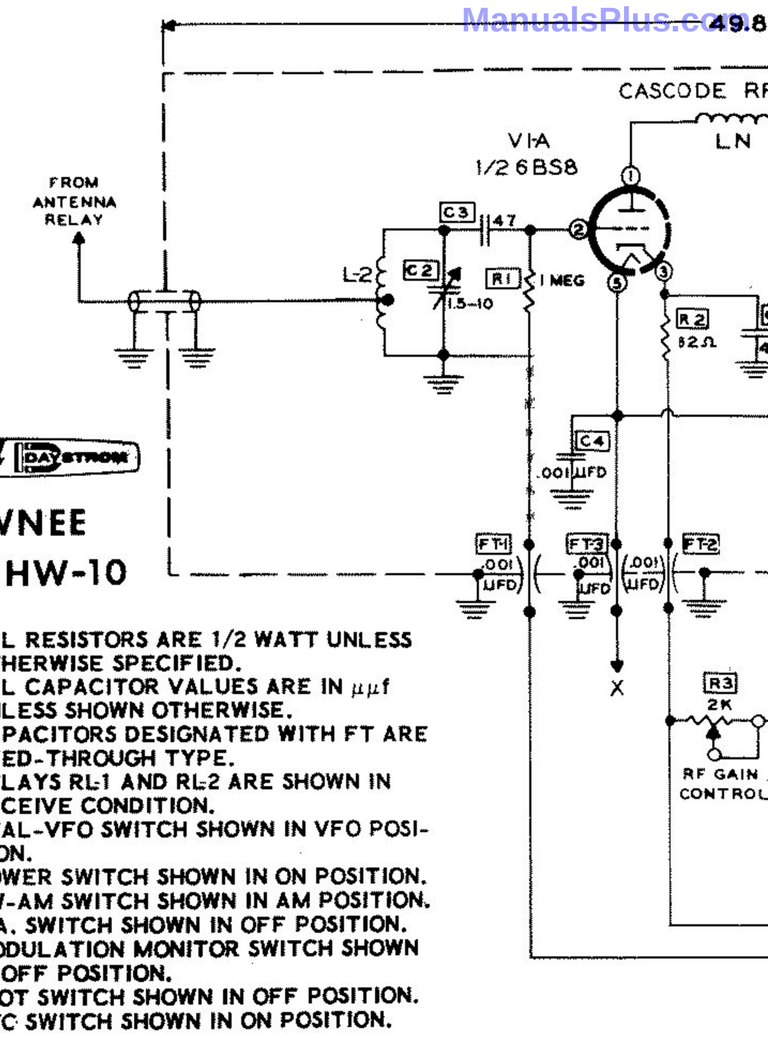

HEATHKIT DAYSTROM

SHAWNEE MODEL HW-10

ALL RESISTORS ARE 1/2 WATT UNLESS OTHERWISE SPECIFIED.
ALL CAPACITOR VALUES ARE IN µµf UNLESS SHOWN OTHERWISE.
CAPACITORS DESIGNATED WITH FT ARE FEED-THROUGH TYPE.
RELAYS RL-1 AND RL-2 ARE SHOWN IN RECEIVE CONDITION.
XTAL-VFO SWITCH SHOWN IN VFO POSITION.
POWER SWITCH SHOWN IN ON POSITION.
CW-AM SWITCH SHOWN IN AM POSITION.
P.A. SWITCH SHOWN IN OFF POSITION.
MODULATION MONITOR SWITCH SHOWN IN OFF POSITION.
SPOT SWITCH SHOWN IN OFF POSITION.
AVC SWITCH SHOWN IN ON POSITION.

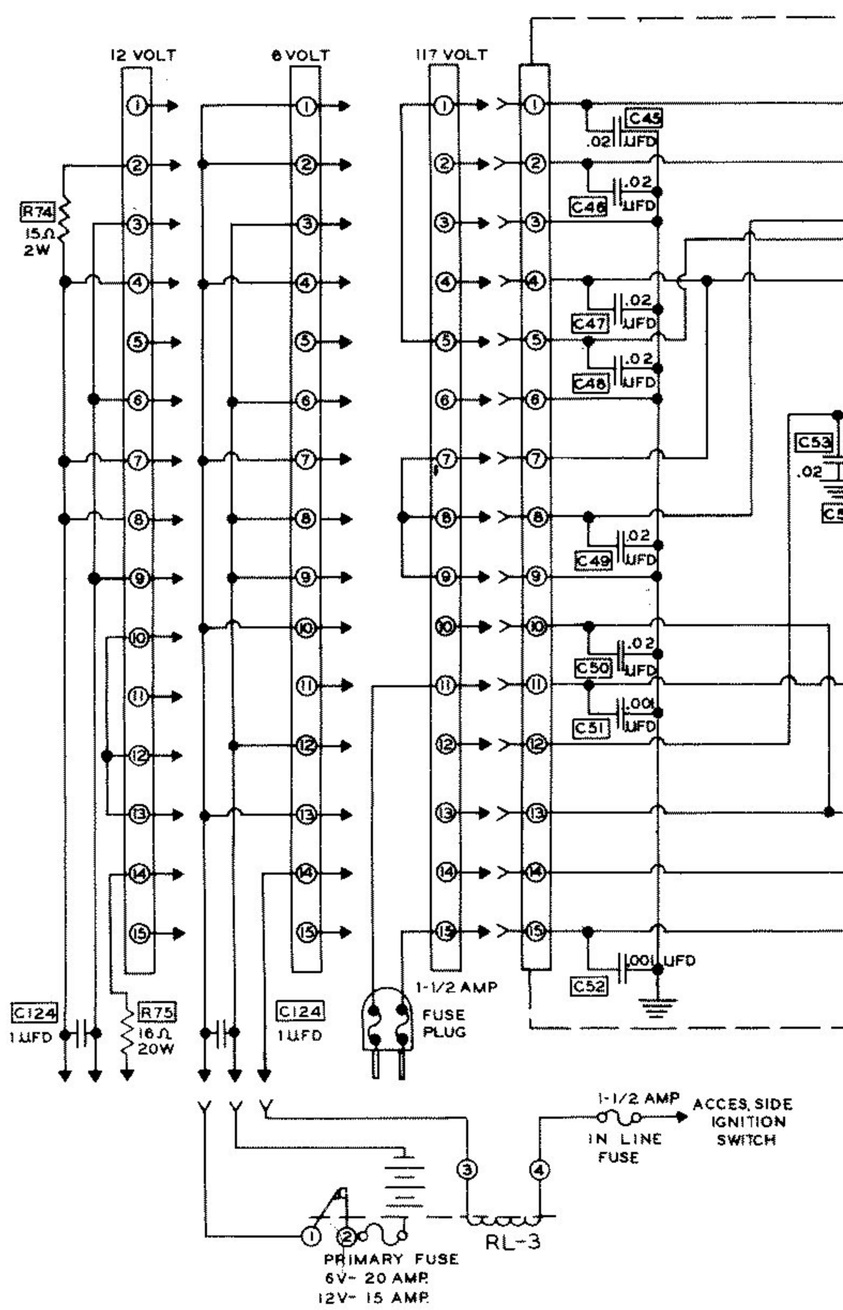

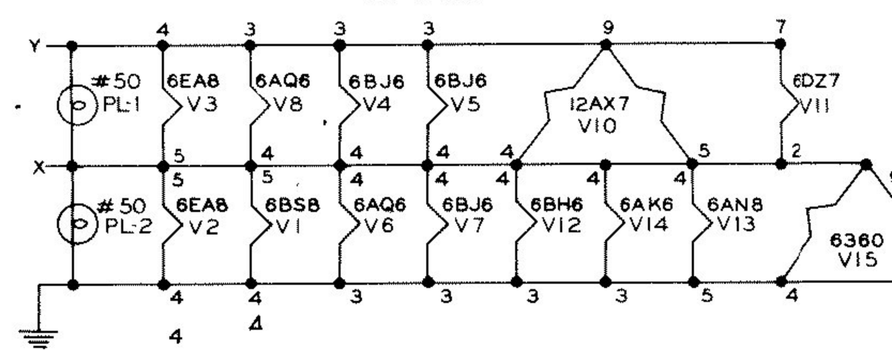

ManualsPlus.com

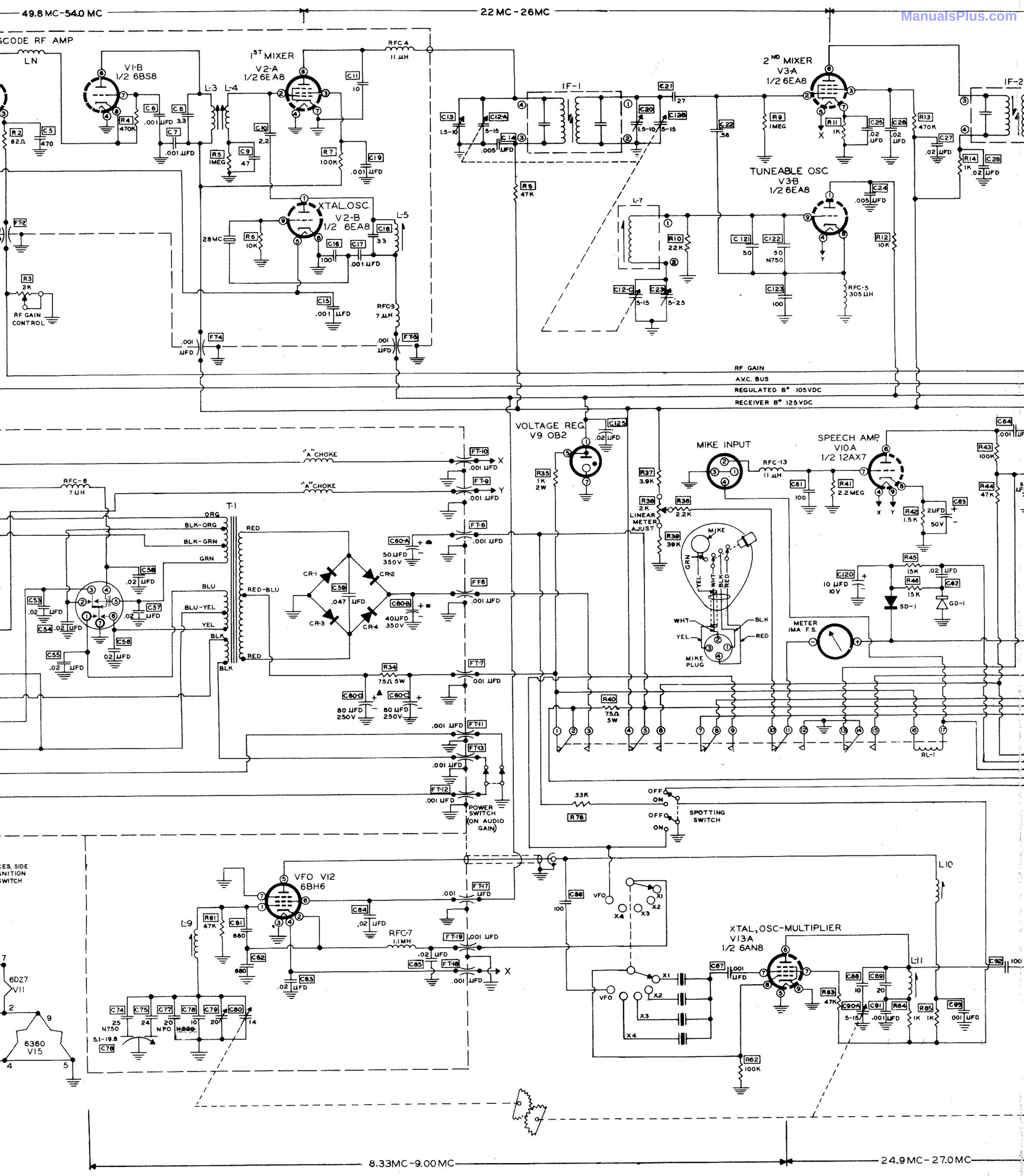
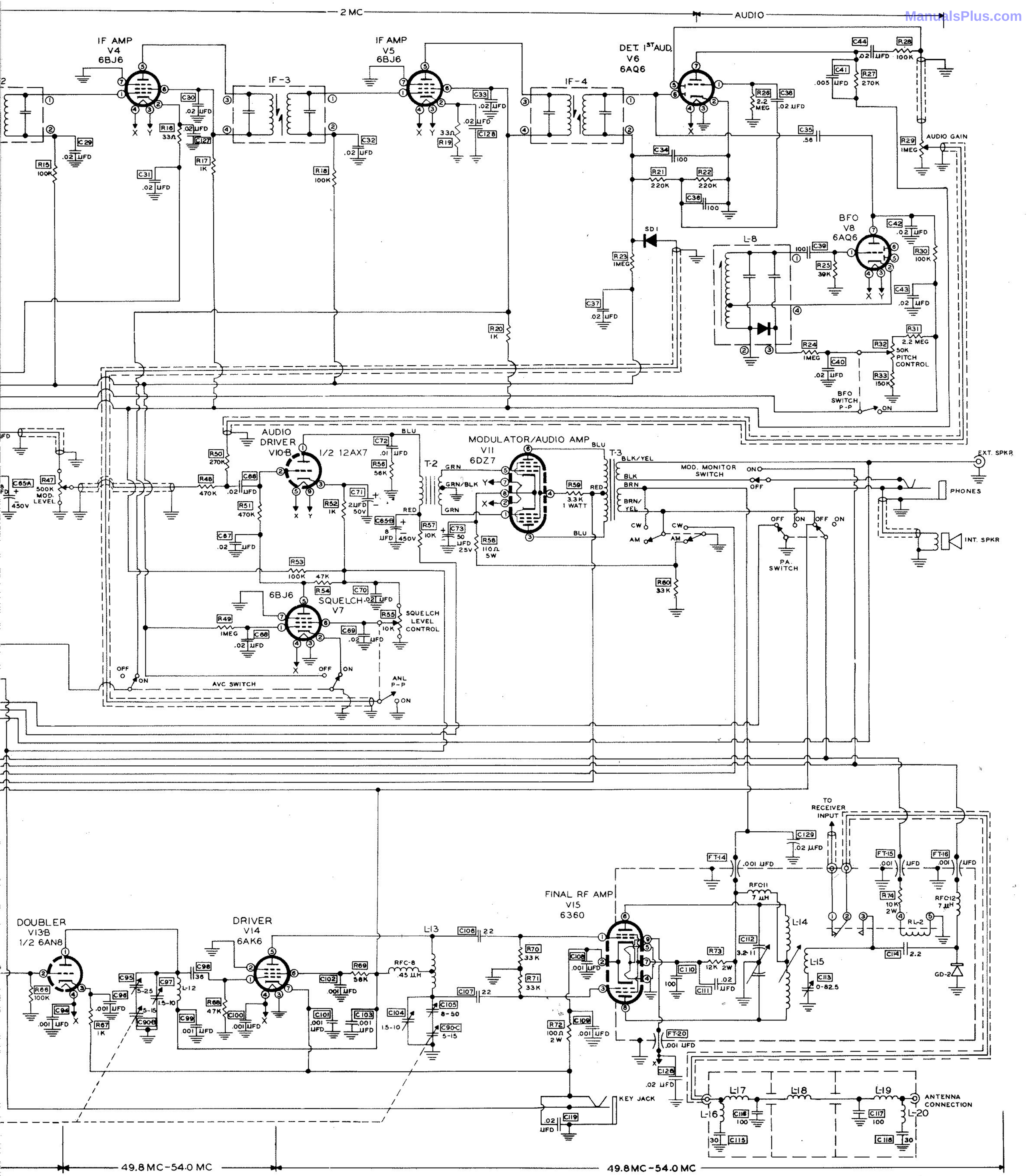
ManualsPlus.com