ManualsPlus.com

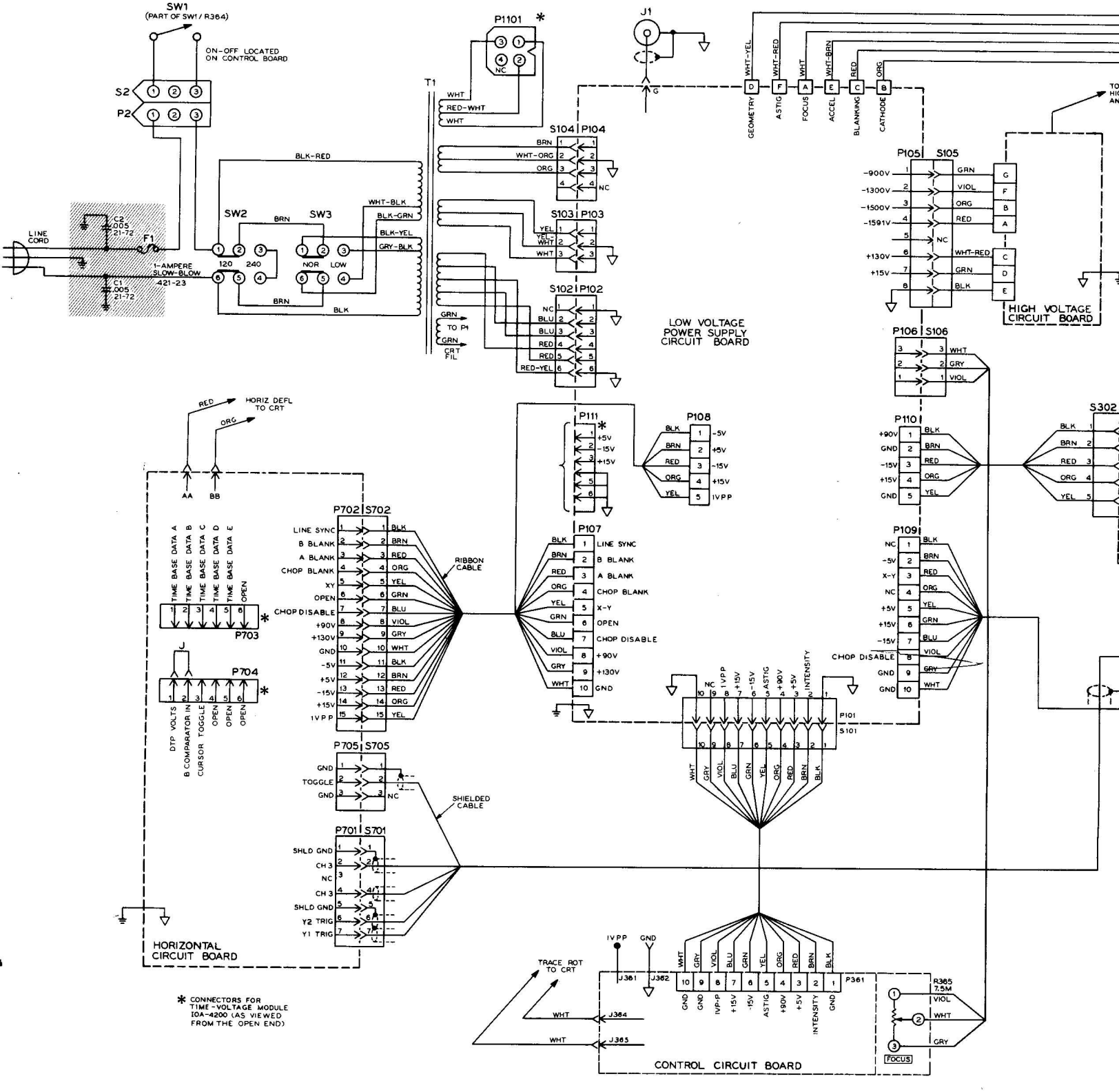

ManualsPlus.com

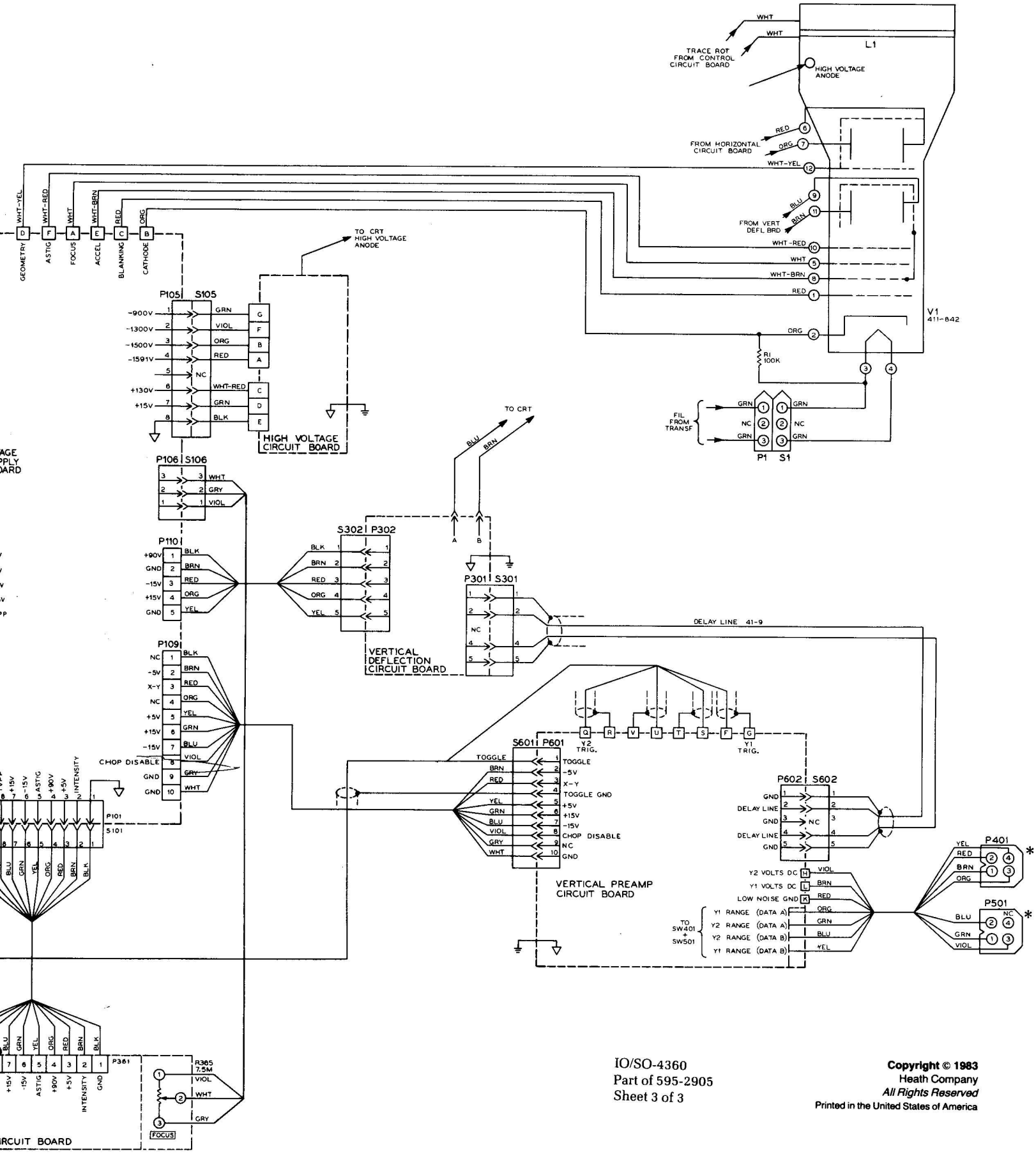

IO/SO-4360
Part of 595-2905
Sheet 3 of 3

Copyright © 1983
Heath Company
All Rights Reserved
Printed in the United States of America