ManualsPlus.com

SC61
Waveform Analyzer

Schematic & Parts List

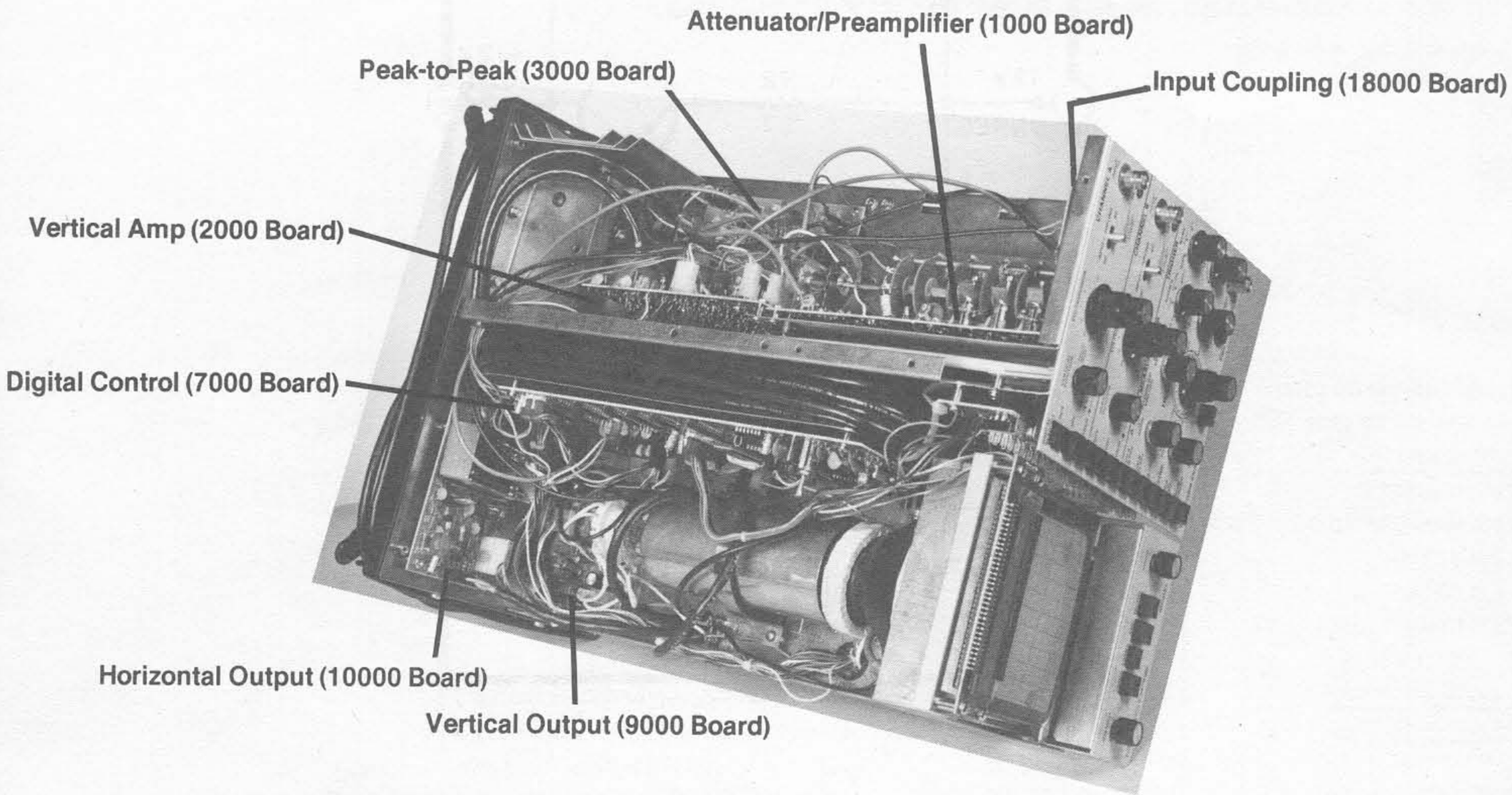

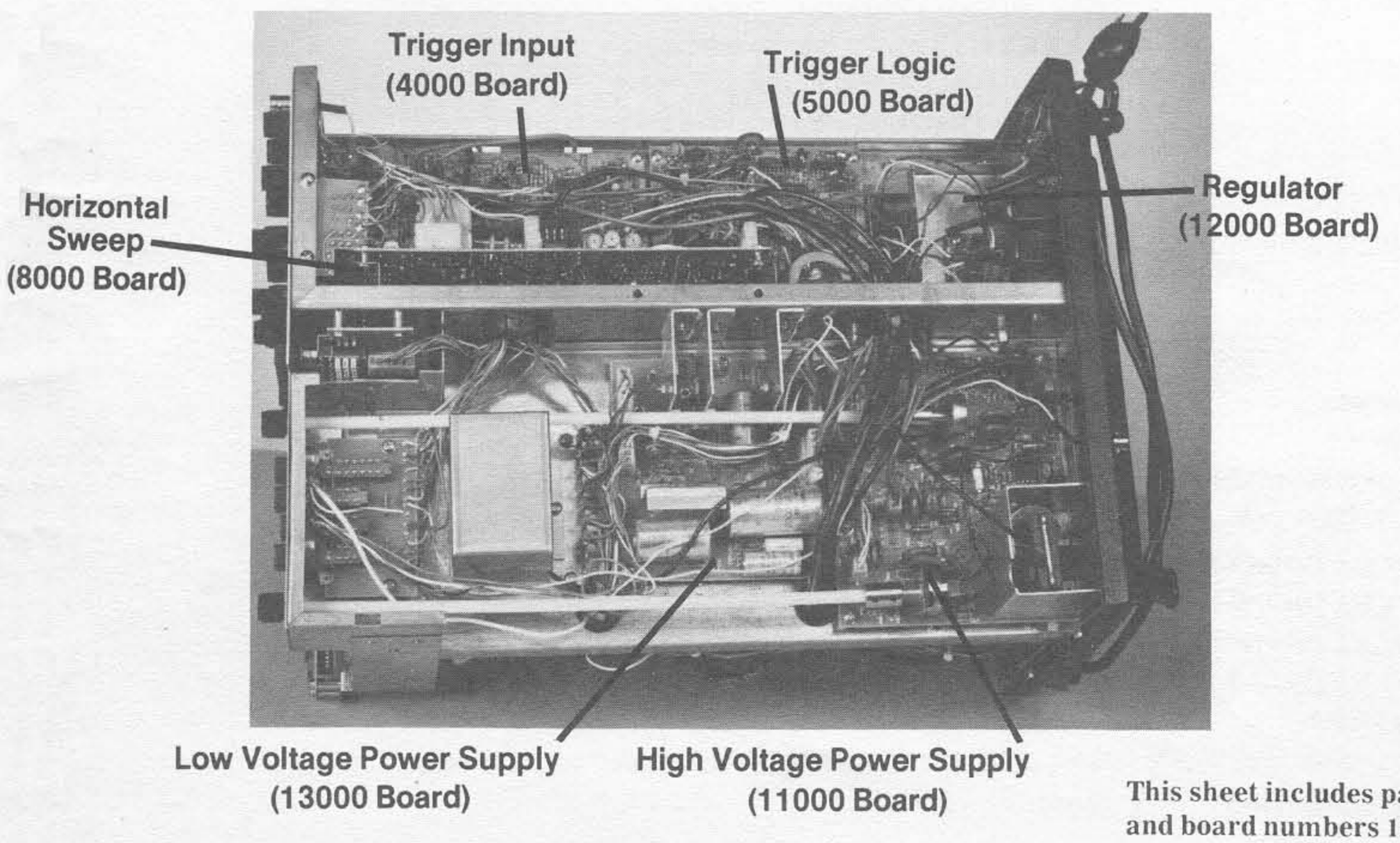

INDEX

BOARD NUMBER	SEE SHEET #
1000	4
2000	4
3000	4
4000	5
5000	4
7000	3
8000	4
9000	5
10000	5
11000	5
12000	1
13000	1
18000	4

This sheet includes parts lists and board numbers 12000 and 13000.

SHEET 1

ManualsPlus.com

Line	Signal Origination	Note
A Enable	IC8007-B Sweep	+5V When Chan A signal is sent to vert. output board
B Enable	IC8007-B Sweep	+5V When Chan B is sent to vert. output board
Vector Enable	S16001-D CRT Display Sel.	0V When vector mode is selected
Vector Enable	S16001-D CRT Display Sel.	+5V When vector mode is selected
Chan A Req	S16001-A CRT Display Sel.	0V When **CHAN A** button is pushed
Chan B Req	S16001-B CRT Display Sel.	0V When **CHAN B** button is pushed
Sweep Enable	IC5013-C Trigger Logic	+4.4V When trigger board tells sweep board to begin sweep
Sweep Enable	IC5013-C Trigger Logic	+3.3V When trigger board tells sweep board to begin sweep
Video Preset Enable	S8001-C Sweep	0V When TIMEBASE switch is in preset video position
Vert. Select	S8001-C Sweep	0V For TIMEBASE switch positions 100mS to .1mS for selecting vertical sync in these positions
Holdoff	IC8005-C Sweep	+4.4V HI During vector or at end of sweep while sweep board is resetting ramp integrator
Holdoff Disable	S16001-D CRT Display Sel.	+5V When **VECTOR** button is pushed
Chop Enable	S16001-A CRT Display Sel.	+5V When **A & B** button is pushed and TIMEBASE switch is between 100mS to .1mS
Vertical Select	S18001 Preset Video Select	0V When TIMEBASE switch is in preset position and **VIDEO VERT** preset button is pushed
Beam Finder Intensity	S14001-L	-8V **BEAM FINDER** button is pushed
Source Control	CRT Display	May toggle to read switch positions in Vector function
Analyzing Bar Enable	Digital Control #6	0V for Delta measurement
Counter Source Select	Digital Control #36	HI = Main Trigger or TV; LO = Auxiliary Trigger Source
Trigger Source Test	Digital Control #37	May toggle to read trigger switches
A Decimal Enable	PPV Amp	Low to enable decimal shift switch
B Decimal Enable	PPV Amp	Low to enable decimal shift switch
Decimal Control	Digital Control #5	HI = CH A; LO = CH B
LCD Display Clock	Digital Control #38	Burst of TTL Logic Level
LCD Data	Digital Control #39	Burst of TTL Logic Level
Back Plane	Digital Control #42	100 Hz square wave 5 VPP
Auto Sweep Enable	S14001-L	+5V when BEAM FINDER pushed
Vector Enable	S16001-D	GND when in sweep modes
Vector Enable	S16001-D	GND when Vector selected
Vertical Beam Find	S14001-L	+8V normal about +5V **BEAM FINDER** pushed
Horizontal Beam Find	S1400	+8V **BEAM FINDER** pushed

NOTES:

1. All resistances in Ohms.
2. All capacitances greater than one are in pF, less than one in uF, unless otherwise indicated.
3. Board interconnection notes:
   □ denotes a single push-on type connector.
   ○ denotes wire soldered to PC board.
   ◇ denotes molex connection. Numbers inside or along side indicate the pin number of the plug-in connector.
4. All controls, jacks, and displays on exterior of unit are shown with box around the name.
5. Arrow on slider of controls indicates the clockwise rotation of the control.
6. All voltages shown on the schematic are referenced to the chassis ground (⏚) and are taken with a 0.1% DVM.
7. Ground connections (common)
   denotes a connection to the SC61 chassis.
   ⏚ denotes the power supply ground connection.
8. All components shown in the shaded areas of the schematic are safety critical and must be replaced with the exact same part to insure continued safety of the instrument.

ManualsPlus.com

TRANSISTOR SPECIFICATIONS AND BASING DIAGRAMS

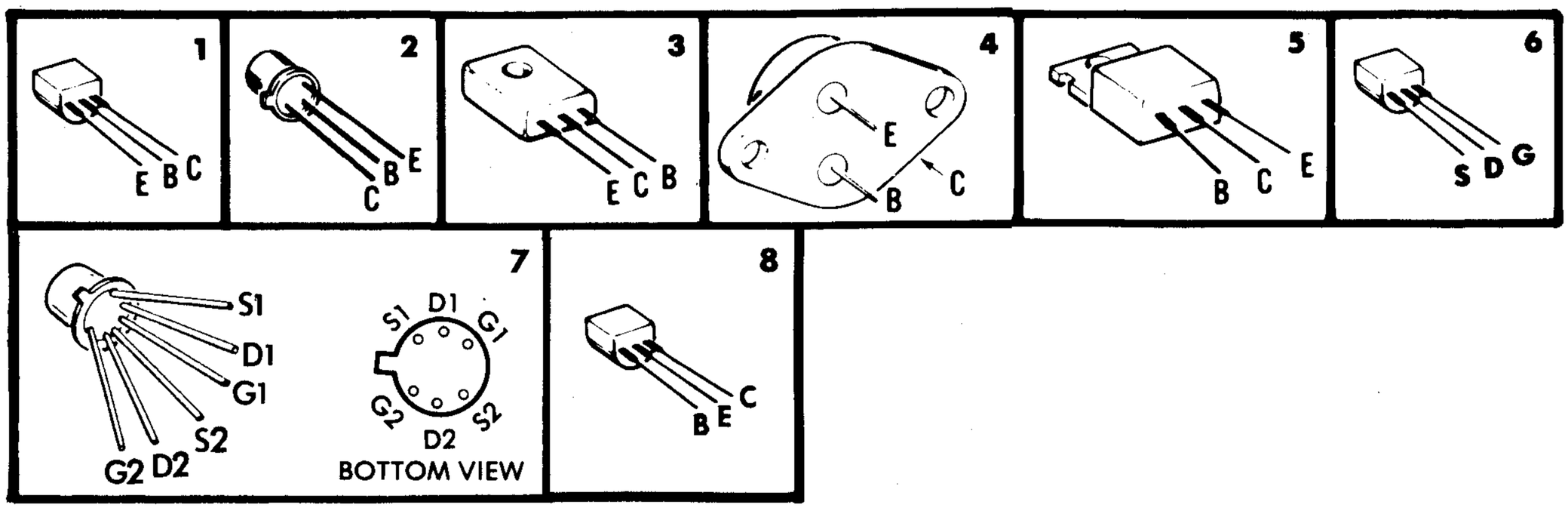

Sencore Part No.	Transistor No.	Basing	Polarity	* Beta/GM	Max I_{CBO}/I_{GSS}
19A7-1	2N3563	1	NPN	20-70	.05
19A13-1	2N3866	2	NPN	50-100	50
19A19	MPF102	6	N Chan	2000-7500	.002
19A24	2N3055	4	NPN	20-70	300
19A29	MJE180	3	NPN	50-250	.1
19A30	MJE170	3	PNP	50-250	.1
19A31-1	2N3958	7	N Chan	1000-3000	.0001
19A33	2N3904	1	NPN	100-300	.05
19A34	2N3906	1	PNP	100-300	.05
19A40	2N4403	1	PNP	100-300	.1
19A42	MPSH11	8	NPN	60	.1
19A44	2N4401	1	NPN	100-300	.1
19A46	2N5089	1	NPN	450 (typ)	.05

* Tested with the Sencore TF46

IC PACKAGE DIAGRAMS

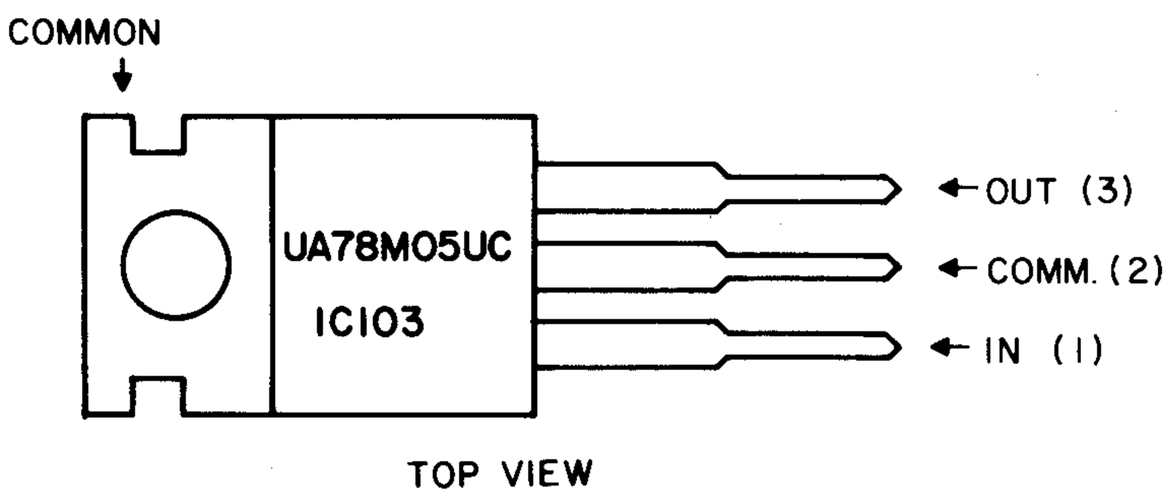

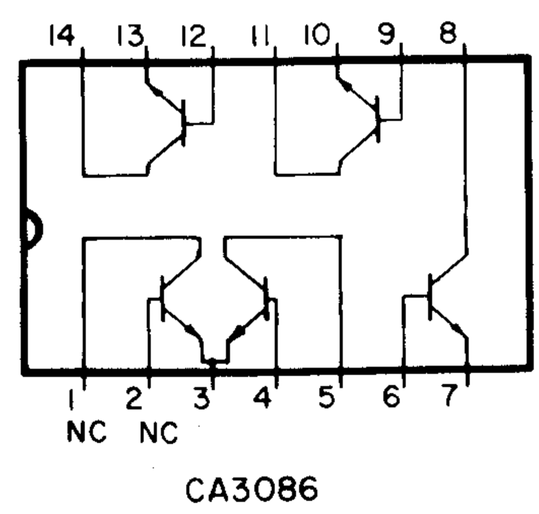

ManualsPlus.com

SCHEMATIC REFERENCE	PART NO.	DESCRIPTION

ATTENUATOR/PREAMPLIFIER (1000 BOARD)

	100G39	Attenuator PC board, complete assembly
IC1, 2	69G75	IC, CA3086, NPN, Transistor Package
TR1	19A31-1	Transistor, 2N3958, dual FET
CR1	50G19	Diode, PD100
R33	15B12-5	Control, 1K log taper, PC mount
R38, 49	15C26-3	Control, 500 ohm linear, PC mount
R3, 8, 13	14A38-1806	Resistor, ¼W, 1%, 1.8M Ohm
R26	14R38-1002	Resistor, ¼W, 1%, 100 ohm
R27, 28	14A38-5001	Resistor, ¼W, 1%, 50 ohm
R40, 41	14A38-1103	Resistor, ¼W, 1%, 1.1K ohm
R44, 45	14A38-2003	Resistor, ¼ W, 1%, 2K ohm
C1,5	24G153	Capacitor, 5 pF, 5%, 500V, Disc NPO
C2, 6, 9	24G399	Capacitor, 3.5-38 pF, Trimmer
C3, 7, 10, 12	24G387	Capacitor, 2-18 pF, Trimmer
C4, 8, 11	24G151	Capacitor, 22 pF, 5%, 500V, Disc
C13	24G72	Capacitor, 4 pF Disc, NPO, ±.4 pF, 500V
C14	24G33	Capacitor, .01 uF, 500V Disc
C15	24G207	Capacitor, .01 uF, +80 - 20%, 100V, Disc
C16, 18	24G119	Capacitor, 470 pF, 10%, 500V, Disc
C17	24G387	Capacitor, 2-18 pF, Trimmer
C19, 20	24G384	Capacitor, 2.2 uF, 20%, 50V, Lytic
C22	24G86	Capacitor, 10 pF, ±10%, 500V, Disc, NPO
C23, 25, 27, 29	24G86	Capacitor, 10 pF, 10%, 500V
C24, 26, 28	24G220	Capacitor, 39 pF, 10%, 700V
C30	24G362	Capacitor, 2-10 pF, Trimmer
C31	24G86	Capacitor, 10 pF, Disc

VERTICAL AMPLIFIER (2000 BOARD)

	100G40	Vertical Amp PC board, complete assembly
TR1, 2, 17, 18	19A45-1	Transistor, 2N5771, PNP
TR3, 4, 19, 20	19A42	Transistor, MPSH 11 High Freq, NPN
TR5-8, 21, 22, 26, 27	19A34-1	Transistor, 2N3906, PNP
TR9, 10, 25	19A33-1	Transistor, 2N3904, NPN
TR11, 12	19A45-SEL1	Transistor, 2N5771, PNP (Matched pair)
TR13-16, 23, 24	19A7-1	Transistor, SE3002, 2N3563, NPN
CR1, 8, 13, 14	50C4-13	Diode, zener, 1N4733A, 5.1V, 5%, 1W
CR2, 3, 4, 5, 6, 7, 9-12	50C5-2	Diode, 1N4148
R29 (SW1)	15B24-1	Control, 1K, 20%, linear
R40	15B22-5	Control, 1K, mini, vert PC mount
R41	15B22-2	Control, 10K
R56	15C7-15	Control, 200 ohm, 30%, vert PC mount
R86	15B12-8	Control, 1K, 20%, linear, PC mount
R7, 8, 10, 23, 25, 66, 67, 69, 82, 88	14A38-5102	Resistor, ¼W, 1%, 510 ohm
R9, 24, 26, 68, 83, 89	14A38-1503	Resistor, ¼W, 1%, 1.5K ohm
R11, 12, 70, 71	14A38-3602	Resistor, ¼W, 1%, 360 ohm
R16, 17, 75, 76	14A38-7501	Resistor, ¼W, 1%, 75 ohm
R21, 22, 80, 81	14A38-6201	Resistor, ¼W, 1%, 62 ohm
R33, 39, 42, 43	14A38-2502	Resistor, ¼W, 1%, 250 ohm
R34, 35	14A38-2702	Resistor, ¼W, 1%, 270 ohm
R51, 52, 94, 95	14A38-3302	Resistor, ¼W, 1%, 330 ohm
R101	14A38-9101	Resistor, ¼W, 1%, 91 ohm
C2, 18	24G86	Capacitor, 10 pF, ±10%, 500V, Disc, NPO
C3, 4, 19, 20, 31, 32, 33, 34	24G119	Capacitor, 470 pF, 10%, 500V, Disc
C5, 21	24G77	Capacitor, 20 pF, 5%, 500V, Disc, NPO
C6	24G123	Capacitor, 720 pF, 10%, 500V, Cer. Disc
C7, 8, 14, 22, 26-28, 35	24G207	Capacitor, .01 uF, +80 -20%, 100V, Disc
C9	24G125	Capacitor, .005 uF, 20%, 200V, Cer. Disc
C10	24G172	Capacitor, 100 pF, Disc, N1500, ±5%, 500V
C11	24G362	Capacitor, 2-10 pF, Trimmer
C12, 23	24G387	Capacitor, 2-18 pF, Trimmer
C13	24G135	Capacitor, 47 pF, 10%, 500V, Disc, NPO
C15, 16, 29, 30	24G384	Capacitor, 2.2 uF, 20%, 50V, Lytic
C24, 25	24G83	Capacitor, 33 pF, Disc, NPO, ±10%, 500V
L1, 2	46G96	Coil, 10 uH, 5%
L3, 4	46G69	Coil, 4.7 uH

ManualsPlus.com

SCHEMATIC REFERENCE	PART NO.	DESCRIPTION
PEAK-TO-PEAK (3000 BOARD)		
	100G38	Peak-to-Peak PC board, complete assembly
IC1	69G7-B	IC, 4001, CMOS, Quad 2 input NOR
IC2	69G39	IC, 10216 ECL Triple Line Receiver
IC3	69G63	IC, TL081, BI-FET Op Amp
TR1, 2, 5, 6, 7	19A33-1	Transistor, 2N3904, NPN
TR3, 4	19A7-1	Transistor, SE3002, 2N3563, NPN
CR1-8	50C13-1	Diode, NP3168
R9, 10	14C29-1202	Resistor, ½W, 1%, 120 ohm
C1, 2	24G172	Capacitor, 100 pF, Disc, N1500, ±5%, 500V
C3-6	24G77	Capacitor, 20 pF, 5%, 500V, Disc, NPO
C7, 10, 11, 12, 14	24G207	Capacitor, .01 uF, +80 - 20%, 100V, Disc
C8, 9	24G207	Capacitor, 2.2 uF, 20%, 50V, Lytic
C13	24G123	Capacitor, 720 pF
L1	46G69	Coil, 4.7 uH
TRIGGER INPUT (4000 BOARD)		
	100G42	Trigger Input PC board, complete assembly
IC1	69G7-B	IC, 4001, CMOS, Quad NOR
IC2	69G37	IC, 74LS00, Quad NAND Gate
IC3, 5	69G75	IC, CA3086, NPN, Transistor Package
IC4, 6	69G133	IC, 10H116 ECL, Triple Line Receiver
TR1-8, 17-20	19A34-1	Transistor, 2N3906, PNP
TR9, 10	19A19-SEL4	Transistor, MPF102, N-Channel FET (Matched pair)
TR11, 12	19A33-1	Transistor, 2N3904, NPN
TR13-16	19A45-SEL1	Transistor, 2N5771, PNP
CR1-8, 11-26	50C5-2	Diode, 1N4148
CR9, 10	50C5-1	Diode, 1N456
R50	15C7-12	Control, 25K, PC mtg.
R5-8, 73	14A38-3602	Resistor, ¼W, 1%, 360 ohm
R9-12	14A38-3903	Resistor, ¼W, 1%, 3.9K ohm
R22-25	14A38-5603	Resistor, ¼W, 1%, 5.6K ohm
R66-69	14C29-2502	Resistor, ½W, 1%, 250 ohm
R73	14A38-2502	Resistor, ¼W, 1%, 250 ohm
R86, 87	14A38-9101	Resistor, ¼W, 1%, 91 ohm
R88, 90	14A38-5102	Resistor, ¼W, 1%, 510 ohm
R89, 91	14A38-1503	Resistor, ¼W, 1%, 1.5K ohm
R92, 93	14A38-3602	Resistor, ¼W, 1%, 360 ohm
C1	24G66	Capacitor, .05 uF
C2	24G52	Capacitor, 5 pF, 20%, NPO, Cer. Disc
C3	24G316	Capacitor, .1 uF, 20%, 600V, Mylar
C4, 5	24G384	Capacitor, 2.2 uF, 20%, 50V, Lytic
C6, 7, 9-12, 16, 17, 19	24G382	Capacitor, 10 uF, 20%, 16V, Lytic
C8, 13	24G77	Capacitor, 20 pF, 5%, 500V, Disc, NPO
C14, 15, 20, 21	24G207	Capacitor, .01 uF, +80 - 20%, 100V, Disc
C18	24G85	Capacitor, 15 pF, Disc, NPO, ±10%, 500V
TRIGGER LOGIC (5000 BOARD)		
	100G43	Trigger Logic PC board, complete assembly
IC1, 9	69G3-B	IC, 4011, Quad 2 Input NAND
IC2	69G132	IC, 10H102 ECL, Quad NOR
IC3	69G68	IC, LF357 FET input Op Amp
IC4	69G8-B	IC, 4013, CMOS, Dual D Flip-Flop
IC5, 7	69G58	IC, LM311, Analog Comparator
IC6, 8	69G102	IC, 96L02, TTL, Dual Multivibrator
IC10-13	69G76	IC, MC10102 ECL, Quad NOR
IC14	69G7-B	IC, 4001, CMOS, Quad NOR
TR1, 2	19A34-1	Transistor, 2N3906, PNP
CR1-15	50C5-2	Diode, 1N4148
R29	15C7-6	Control, 500K, Vert PC Mtg.
C1, 2, 6, 15-18	24G207	Capacitor, .01 uF, +80 −20%, 100V, Disc
C3	24G353	Capacitor, .220 pF, 20%
C5	24G196	Capacitor, 2 uF, 50V, +100 −0
C7	24G95	Capacitor, 82 pF, Disc, ±10%, 100V
C8	24G168	Capacitor, .22 uF, 10%
C9, 14	24G216	Capacitor, .1 uF, Mylar Cap
C10, 11	24G123	Capacitor, 720 pF, 5%, 125V, Poly
C12	24G52	Capacitor, 5 pF, 20%, NPO, Cer. Disc
C13	24G17	Capacitor, .001 uF, 500V, Disc

ManualsPlus.com

SCHEMATIC REFERENCE	PART NO.	DESCRIPTION
LCD DIGITAL (6000 BOARD)		
	100G49	LCD Display PC board, complete assembly
	23G72	LCD display, 6 digit
	69G92	IC, 4332, LCD Driver
DIGITAL CONTROLLER (7000 BOARD)		
	100G48	Digital Controller PC board, complete assembly
IC1	69G39	IC, 10216, ECL Triple Line Receiver
IC2	69G83	IC, 10135, ECL Dual JK Flip-Flop
IC3, 18, 31	69G76	IC, 10102, ECL, Quad NOR
IC4	69G26	IC, 74574, Dual D Flip-Flop
IC5, 8	69G86	IC, 74LS393, TTL Dual 4 BT Counter
IC6	69G37	IC, 74LS00, Quad NAND gate
IC7	69G31	IC, 74LS74, Dual D Flip-Flop
IC9	69G81	IC, 10231, ECL Dual D Flip-Flop
IC10	69G71	IC, 8035, Microcomputer
IC11	69G75	IC, CA3086, NPN, Transistor Package
IC12	69G80	IC, 3140A, Op-Amp
IC13	69G87	IC, 74LS02, TTL Quad NOR
IC14, 25, 26, 27	69G91	IC, 74LS377, Octal D Edge Triggered Latch
IC15	69G94	IC, 2732, 4K, X8 Prom
NOTE: Include "PGM" number marked on IC.		
IC16	69G132	IC, 10H102, ECL Quad 2 input NOR
IC17, 19	69G63	IC, TL081, BI-FET, Op Amp
IC20	69G66	IC, LD120 A/D
IC21	69G64-B	IC, 4053, Triple Two-channel Switch
IC22	69G7-B	IC, 4001, CMOS, Quad 2 input, NOR
IC23	69G130	IC, DACO802, D/A Converter
IC24	69G88	IC, DAC08, D/A Converter
IC28, 29	69G84	IC, 74LS365, Hex Tri-State Buffer
IC30	69G8-B	IC, 4013, Dual D Flip-Flop
TR1-3, 5-8	19A34-1	Transistor, 2N3906, PNP
TR4, 9, 10	19A33-1	Transistor, 2N3904, NPN
CR1-8, 11, 12	50C5-2	Diode, 1N4148
CR9, 10	50C4-3	Diode, IN4742, 12V, 5%, 1W, Zener
CR13	50C12-1	Diode, 1N823, 6.2 volt, TCA, 5%
CR14, 15, 16	16S10	Diode, 1A, 400 PIV
R82	15A19-7	Control, 10K multiturn
R102	15C7-17	Control, 1K, vert PC mount trimmer
R71, 73	14C26-14856A	Resistor, ½W, .1%, 1485K ohm
R72, 74	14C26-1504	Resistor, ½W, .1%, 15K ohm
R80	14C30-6204	Resistor, ½W, 2%, 62K ohm
R81	14C29-1205B	Resistor, ½W, 1%, 120K ohm
R83	14C26-1005	Resistor, ½W, .1%, 100K ohm
R100	14C29-1503	Resistor, ½W, 1%, 1.5K ohm
R104	14C29-4704	Resistor, ½W, 1%, 47K ohm
C1, 3, 7, 11, 12, 14, 16, 27, 44, 46, 47	24G207	Capacitor, .01 uF, +80 -20%, 100V, Disc
C2	24G202	Capacitor, 10 uF, Lytic
C4, 15, 26, 29, 31, 35, 36, 38-40	24G384	Capacitor, 2.2 uF, 20%, 50V, Lytic
C5	24G17	Capacitor, .001 uF, 500V, Disc
C6, 42, 43	24G192	Capacitor, 47 pF, 10%, 100V, Disc
C8	24G113	Capacitor, 270 pF, 10%, 1000V, Disc
C9, 18, 20	24G152	Capacitor, 68 pF, 10%, 500V, Disc, NPO
C10	24G353	Capacitor, 220 pF, 20%, Disc NPO
C17, 24, 25	24G172	Capacitor, 100 pF, Disc, N1500, ±5%, 500V
C19	24G105	Capacitor, 390 pF, ±5%, 125V, tube, N150
C21	24G84	Capacitor, 27 pF, Disc, NPO, ±10%, 500V
C22	24G347	Capacitor, 3-20 pF, Trimmer vert PC mount
C23	24G223	Capacitor, .15 uF, ±10%, 100V, Mylar
C28, 30	24G212	Capacitor, .047 uF, 10%, 250V, Mylar
C32, 41	24G216	Capacitor, .1 uF, 10%, 100V, Mylar
C33	24G145	Capacitor, .27 uF, ±5%, 200V, Mylar, PC mount
C34	24G375	Capacitor, 1800 pF, Poly, ±10%, 33V
C37	24G59	Capacitor, .05 uF, Disc
C45, 48, 49	24G384	Capacitor, 2.2 uF, 20%, 50V, Lytic
C51, 52	24G207	Capacitor, .01 uF, +80 -20%, 100V, Disc
C53, 54, 55	24G420	Capacitor, 50 uF, 50 VDC, Axial
L1	46G101	Coil, .85 uH
L2, 7	46G96	Coil, 10 uH, 5%
L3-6	41G2	Coil, relay, 5V
X1	47A27	Crystal, 6.00 MHz, 10 PPM/°C

ManualsPlus.com

SCHEMATIC REFERENCE	PART NO.	DESCRIPTION
HORIZONTAL SWEEP (8000 BOARD)		
	100G44	Horizontal Sweep PC board, complete assembly
IC1, 2, 3, 5	69G76	IC, 10102 ECL, Quad NOR
IC4	69G77	IC, 9602, TTL Dual multivibrator
IC6	69G37	IC, 74LS00, Quad NAND gate
IC7	69G31	IC, 74LS74, Dual D Flip-Flop
IC8	69G3-B	IC, 4011, Quad 2 Input NAND
IC9	69G123	IC, 4066B, CMOS QUAD Switch
TR1, 2, 3, 4, 5, 9, 12, 21	19A34-1	Transistor, 2N3906, PNP
TR7, 8, 10, 11, 15-20, 22	19A33-1	Transistor, 2N3904, NPN
TR13, 14	19A19-SEL4	Transistor, MPF 102 N-Channel FET
CR1-16	50C5-2	Diode, 1N4148
R14, 15	15C22-7	Control, 50K, 20%, Mini, PC mount
R16	15C22-6	Control, 25K, 20%, Mini, PC mount
R73	15B25-1	Control, 20K, 20%, Linear
R86	15C22-1	Control, 10K
R93	15C22-8	Control, 2K, 20%, Mini, PC mount
R102, 104	15C7-3	Control, 500 ohm
R117	15C7-17	Control, 1K, 30%, vert. mount
R121	15C22-1	Control, 500 ohm
R123	15C22-4	Control, 5K
R36, 43	14C38-6202	Resistor, ¼W, 1%, 620 ohm
R37, 44	14C38-5102	Resistor, ¼W, 1%, 510 ohm
R63	14C29-2206	Resistor, ½W, 1%, 2.2M ohm
R64	14C29-1106	Resistor, ½W, 1%, 1.1M ohm
R65	14C29-2205	Resistor, ½W, 1%, 220K ohm
R66	14C29-4404	Resistor, ½W, 1%, 44K ohm
R67	14C29-2004	Resistor, ½W, 1%, 20K ohm
R68	14C29-5106	Resistor, ½W, 1%, 5.1M ohm
R69	14C29-4405	Resistor, ½W, 1%, 440K ohm
R70	14C29-1105	Resistor, ½W, 1%, 110K ohm
R72	14C29-2204	Resistor, ½W, 1%, 22K ohm
R94	14C29-7203	Resistor, ½W, 1%, 7.2K ohm
R99, 100	14C29-2702	Resistor, ½W, 1%, 270 ohm
R112	14C29-2203	Resistor, ½W, 1%, 2.2K ohm
R113	14C29-7501	Resistor, ½W, 1%, 75 ohm
R114	14C29-1202	Resistor, ½W, 1%, 120 ohm
C1, 6-8, 10, 11, 23, 26, 27, 30, 31, 34	24G207	Capacitor, .01 uF, +80 -20%, 100V Disc
C2, 3	24G86	Capacitor, 10 pF, ±10%, 500V, Disc
C4, 5	24G119	Capacitor, 470 pF, 10%, 500V, Disc
C12, 13	24G152	Capacitor, 68 pF, 10%, 500V Disc
C14, 16	24G168	Capacitor, .22 uF, 100V, 10%, Mylar
C15	24G178	Capacitor, 200 pF, 125V, 5%, Poly
C17	24G140	Capacitor, .002 uF, 10%, 500V, Disc
C18	24G398	Capacitor, .0068 uF, 2.5%, MIAL
C19	24G396	Capacitor, .47 uF, 1%
C20	24G397	Capacitor, .0047 uF, 1%
C21	24G53	Capacitor, 30 pF, 5%, 500V Disc
C22	24G387	Capacitor, 2-18 pF, Trimmer
C24	24G324	Capacitor, 12 pF, 5%, 500V, Disc NPO
C28	24G151	Capacitor, 22 pF, 5%, 500V Disc
C29	24G126	Capacitor, .01 uF, 20%, 200V, Disc
C32	24G125	Capacitor, .005 uF, 20%, 200V, Disc
S1	25B293	Switch, Timebase-Freq Select
VERTICAL OUTPUT (9000 BOARD)		
	100G41	Vertical Output PC board, complete assembly
TR1, 2, 5, 6, 7, 9	19A13-1	Transistor, 2N3866
TR3, 4	19A45	Transistor, 2N5771, PNP
TR8	19A44	Transistor, 2N4401, NPN
CR1, 2	50C5-2	Diode, 1N4148
R4, 7, 33	15C22-2	Control, 10K, Mini, PC mount
R9	15C22-1	Control, 500 ohm
R25	15C22-5	Control, 1K, Mini, vert. PC mount
R14, 15	14C29-1102	Resistor, ½W, 1%, 110 ohm
R18, 19	14C29-1302	Resistor, ½W, 1%, 130 ohm
C1	24G387	Capacitor, 2-18 pF, Trimmer
C2	24G119	Capacitor, 470 pF, 10%, 33V, Poly
C3	24G174	Capacitor, 2100 pF, 5%, 125V, Poly

ManualsPlus.com

SCHEMATIC REFERENCE	PART NO.	DESCRIPTION
C4, 5, 6, 7, 8, 9, 14	24G207	Capacitor, .01 uF, +80 -20%, 100V, Disc
C10	24G222	Capacitor, .47 uF, Mylar, 200WVDC
C11	24G86	Capacitor, 10 pF, ±10%, 500V, Disc, NPO
C12, 13	24G312	Capacitor, 50 uF, Lytic, +80 - 20%, 16V
L4, 5	46G83	Coil, .33 uH, ±5%

HORIZONTAL OUTPUT (10000 BOARD)

	100G45	Horizontal Output PC board, complete assembly
TR1, 2	19A34-1 SEL2	Transistor, 2N3906, PNP
TR3, 6, 7, 10	19A34-1	Transistor, 2N3906, PNP
TR4, 9	19A23-SEL1	Transistor, D40N1 NPN
TR5, 11	19A32-1	Transistor, 2N5401, PNP
TR8	19A33-1	Transistor, 2N3904, NPN
CR1	50C4-13	Diode, zener, 1N4733A, 5.1V, 5%, 1W
CR2, 3, 4, 5, 6	50C5-2	Diode, 1N4148
R16	15C7-17	Control, 1K, 30%
R7, 27, 28, 30, 31 32, 33, 34	14C29-1004	Resistor, ½W, 1%, 10K ohm
R15, 17	14C29-7252	Resistor, ½W, 1%, 725 ohm
C1, 3, 8, 13, 15	24G126	Capacitor, .01 uF, 20%, 200V, Disc
C2	24G167	Capacitor, 50 uF, 250V, Lytic
C4, 9, 10, 14, 16	24G207	Capacitor, .01 uF, +80 -20%, 100V, Disc
C5	24G384	Capacitor, 2.2 uF, 20%, 50V, Lytic
C6	24G132	Capacitor, .01 uF, 500V, Disc, NPO
C11, 17	24G196	Capacitor, 2 uF, Lytic
C18, 19	24G322	Capacitor, .56 pF, 10%, 500V
L1	46G9	Coil, 10 MHz Powder Iron Core Fixed

HIGH VOLTAGE POWER SUPPLY (11000 BOARD)

	100G47	High Voltage Power Supply PC board, complete assembly
IC1	69G97	IC, 74504 TTL Hex. Inverter
IC2	69G63	IC, TL081, FI-FET Op-Amp
TR1, 3, 11	19A33-1	Transistor, 2N3904, NPN
TR2	19A29-3	Transistor, MJE182, NPN V_{CEO}, 80V
TR4, 5, 6, 7, 10	19A34-1	Transistor, 2N3906, PNP
TR8	19A49	Transistor, 2N5415
TR9	19A23	Transistor, D40N1, NPN
CR1, 2, 3, 7-21, 25	50C5-2	Diode, 1N4148
CR4, 5	16G16	Diode, 8 KV P.I.V.
CR6	16S10	Diode, 1N4004, 1 amp
CR22	50C4-11	Diode, 15 volt zener
CR23	50C4-13	Diode, zener, 1N4733A, 5.1V, 5%, 1W
CR24	50C4-23	Diode, zener, 1N4762A, 82V, 5%, 1W
R13	15C7-40	Control, 1M, 30%, Linear
R39	15C24-2	Control, 200K, 20% with push switch
R60	15C7-17	Control, 1K, 30%, vert. mount
R75	15B12-6	Control, 2M, 30% Linear
R11	14C27-4804A	Resistor, ½W, ¼%, 48K ohm
R20	14C32-9006A	Resistor, 1W, 1%, 9M ohm
C1, 4, 5, 20, 22 27, 29, 34, 37	24G207	Capacitor, .01 uF, +80 -20%, 100V, Disc
C2, 3, 23, 24, 28	24G384	Capacitor, 2.2 uF, 20%, 50V, Lytic
C6, 9	24G212	Capacitor, .047 uF, 10%, 250V, Mylar
C7	24G118	Capacitor, 100 uF, 15V, Lytic
C8, 21	24G196	Capacitor, 2 uF, Lytic
C10, 11, 12, 13, 14, 15, 16, 17, 18, 19	24G305	Capacitor, .005 uF, 3 KV, Disc
C25, 26	24G208	Capacitor, 150 pF, 10%, 500V, Disc
C30	24G146	Capacitor, .47 uF, 250V, Mylar
C31, 36	24G126	Capacitor, .01 uF, 20%, 200V, Disc
C33	24G425	Capacitor, .25 - 1.5 pF, 600V, Teflon, Trimmer
L1, 2	46A62	Coil, 200 uH
L3	46G88	Ferrite Bead
L4, 5	46G87	Coil, 1.2 uH
T1	28G60	Transformer, ferrite "U" core
T1	28B59-A	Transformer, coil high voltage

ManualsPlus.com

SCHEMATIC REFERENCE	PART NO.	DESCRIPTION
REGULATOR (12000 BOARD)		
	100G55	Regulator PC board, complete assembly
TR1	19A34-1	Transistor, 2N3906, PNP
R5	14B49-15	Resistor, 2.4 ohm, 5W, wire wound
R6	14C10-560	Resistor, 2W, 5%, 56 ohm
C1	24G118	Capacitor, 100 uF, 15V, Lytic
C2	24G382	Capacitor, 10 uF, 16V, Lytic
LOW VOLTAGE POWER SUPPLY (13000 BOARD)		
	100G46	Low Voltage Power Supply PC board, complete assembly
IC1	69G131	IC, 7808, +8V, 1 amp regulator
IC2, 3	69G79	IC, voltage reg −8V, 79M08
TR1	19A34-1	Transistor, 2N3906, PNP
TR2	19A30-1	Transistor, MJE170, PNP, V_{CEO}, 40V
TR3, 4	19A33-1	Transistor, 2N3904, NPN
CR1-10, 13, 14, 17, 18, 19	16S10	Diode, 1N4004, 1 amp
CR11, 12	16G14	Diode, 3 amp
CR15	50C4-11	Diode, 15 volt zener
CR16	50C5-2	Diode, 1N4148
R1	14C29-2260	Resistor, ½W, 1%, 2.26 ohm
R12	15C7-14	Control, 5K vert PC mount trimmer
C1	24G307	Capacitor, 2000 uF, 50V, Lytic
C2, 4, 8, 10, 11	24G196	Capacitor, 2 uF, 50V, Lytic
C3	24G17	Capacitor, .001 uF, 500V, Disc
C5	24G239	Capacitor, 150 uF, 200V, Lytic
C6, 12	24G146	Capacitor, .47 uF, 200V, Mylar
C7	24G170	Capacitor, 10 uF, 315V, Lytic
C9	24G240	Capacitor, 2000 uF, 25V, Lytic
HIGH VOLTAGE MULTIPLER BOARD (15000 BOARD)		
	100G33	HV multiplier board, complete assembly
CR1, 2, 3	16G16	Diode, 8KV, P.I.V.
C1, 2	24G305	Capacitor, .005 uF, 3KV, Disc
C3	24G385	Capacitor, .005 uF, 6 KV, Disc
INPUT COUPLING PC BOARD (18000BOARD)		
	43A209A	Input Couple P.C. board
IC1	69G63	IC, TL081, BiFET, OP Amp
CR1, 2	50C5-2	Diode, 1N4148
R1	14C29-1204A	Resistor, ½W, 1%, 12K ohm
R2	14C29-2006	Resistor, ½W, 1%, 2M ohm
C1	24G180	Capacitor, .1 uF, 600V, 10%
C2	24G33	Capacitor, .01 uF, 500V
C3	24G134	Capacitor, 560 pF, 500V, Disc
C4	24G214	Capacitor, .001 uF, 500V, Disc
C5	24G42	Capacitor, .005 uF, 500V
MOV1	33G251	MOV Protection
MISCELLANEOUS P.C. BOARD ASSEMBLIES		
16000 board	100G32	CRT display pushbutton PC board, complete assembly
19000 board	100G34	Video vert & horiz selector PC board, complete assembly
17000 board	100G36	DC balance channel A and channel B PC board, complete assembly (2 used)
14000	100G37	Digital display select PC board, complete assembly
S1	100G22	Trigger source switch, complete assembly
S3	100G23	Trigger mode switch, complete assembly
	100G24	Trigger polarity switch, complete assembly
R10	100G28	Trigger level pot, complete assembly
CHASSIS		
R2, 4	14C26-1356	Resistor, 1.35M ohm, ½W, .1%
R9	15B15-1	Control, 200K, linear
R7	15B15-2	Control, 2K, 30%, linear

ManualsPlus.com

SCHEMATIC REFERENCE	PART NO.	DESCRIPTION
	18G28	CRT, 140CGB31
	46G100	CRT, rotation coil
	26G128	CRT, socket
C1	24G126	Capacitor, .01 uF, 200V, 20%, Cer. Disc.
C2, 3	24G364	Capacitor, .0022 uF, 2KV, 10%, Cer. Disc.
C4	24G391	Capacitor, 10,000 uF, 25V, Lytic
T1	28K81-B	Power transformer
F1	64G28	Fuse holder
	69G85	IC, 5 volt regulator, 1 amp
	21G45-B	Pushbutton, .472 long x .218 wide
	21K81-1	Buttons
	21G88	Knob, .51 with line
	21B89	Knob, .51 w/o line
	21B90	Knob, dual concentric
	39G120-B	Test lead, 48 banana to alligator
	39G153	Probe, lo capacity with DC lead
	39G157	DC Probe
	168B42	Retractable test probe tip
	63K27-A	Window, CRT
	63A29	Lens, LCD display
	68A34	Hex Key, 1/16" short type
	27G18	AC line cord, 3 wire
	8A276	Escutcheon, SC61 CRT control
	8A277	Escutcheon, SC61 LCD display
	8A278	Escutcheon, SC61 main panel
	37G45-1	Bumpers, rubber case feet
	37B41	Foot, cord wrapper
	111A64-1	12-inch ground lead with alligator clip
	111A64-2	4-inch ground lead with alligator clip
	111A64-3	Special high frequency ground clip

Components not listed are standard replacement parts and may be purchased locally. When ordering parts, please specify the instrument model number, schematic reference, part number, and description of the parts required. Parts orders will be shipped C.O.D. unless remittance accompanies order. Parts prices may be obtained by calling Service Department Parts at 605-339-0100. Minimum billing on parts orders is $5.00.

WARNING

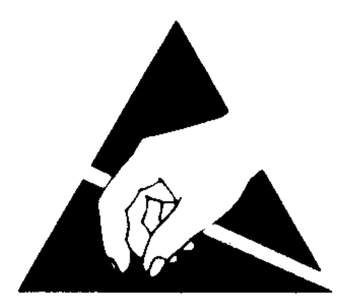

Avoid damage to parts caused by static electricity!

Most solid-state devices and film resistors are susceptible to damage due to discharge of static electricity. Observe the following precautions when a PC board is removed from the unit, or when handling components:

1. The person handling the part must be grounded through a 1 megohm resistor via a wrist strap or similar ground connection.
2. A PC board or component should never be placed on an insulated surface. The surface must be grounded (through a 1 megohm resistor) and conductive.
3. All replacement parts must be left in a completely enclosed, conductive container or package until ready for use. The person removing the part from the container must be properly grounded. All parts susceptible to static damage are shipped in conductive containers when ordered from the Sencore Service Department.

ManualsPlus.com

NOTE: Pink foils, top side of board;
grey foils, back side of board.

ManualsPlus.com

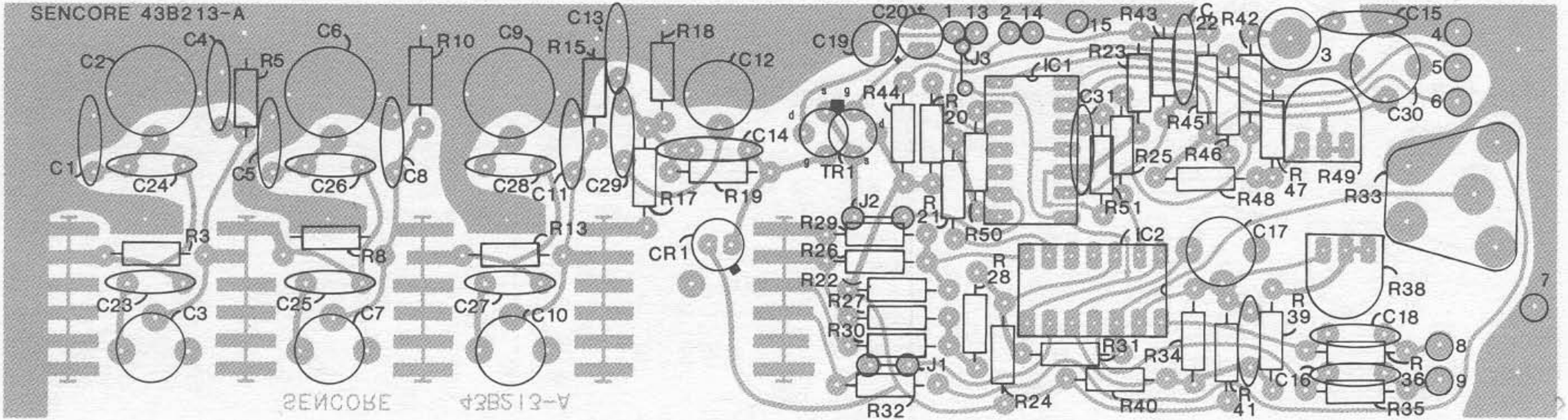

"1000" ATTENUATOR/PREAMPLIFIER BOARD COMPONENT VIEW

ManualsPlus.com

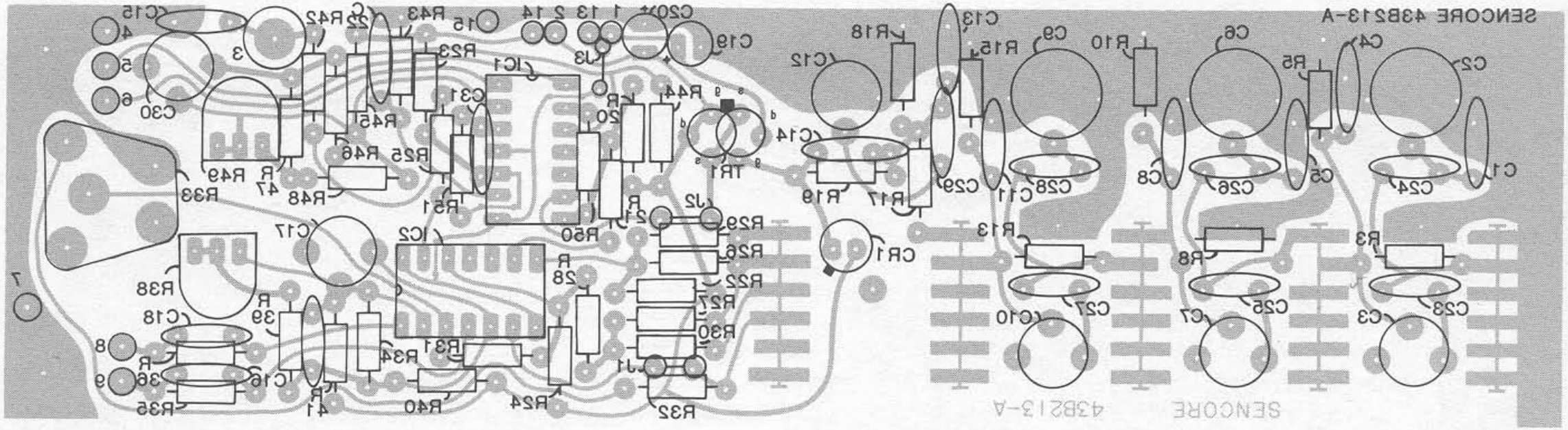

"1000" ATTENUATOR/PREAMPLIFIER BOARD FOIL VIEW

ManualsPlus.com

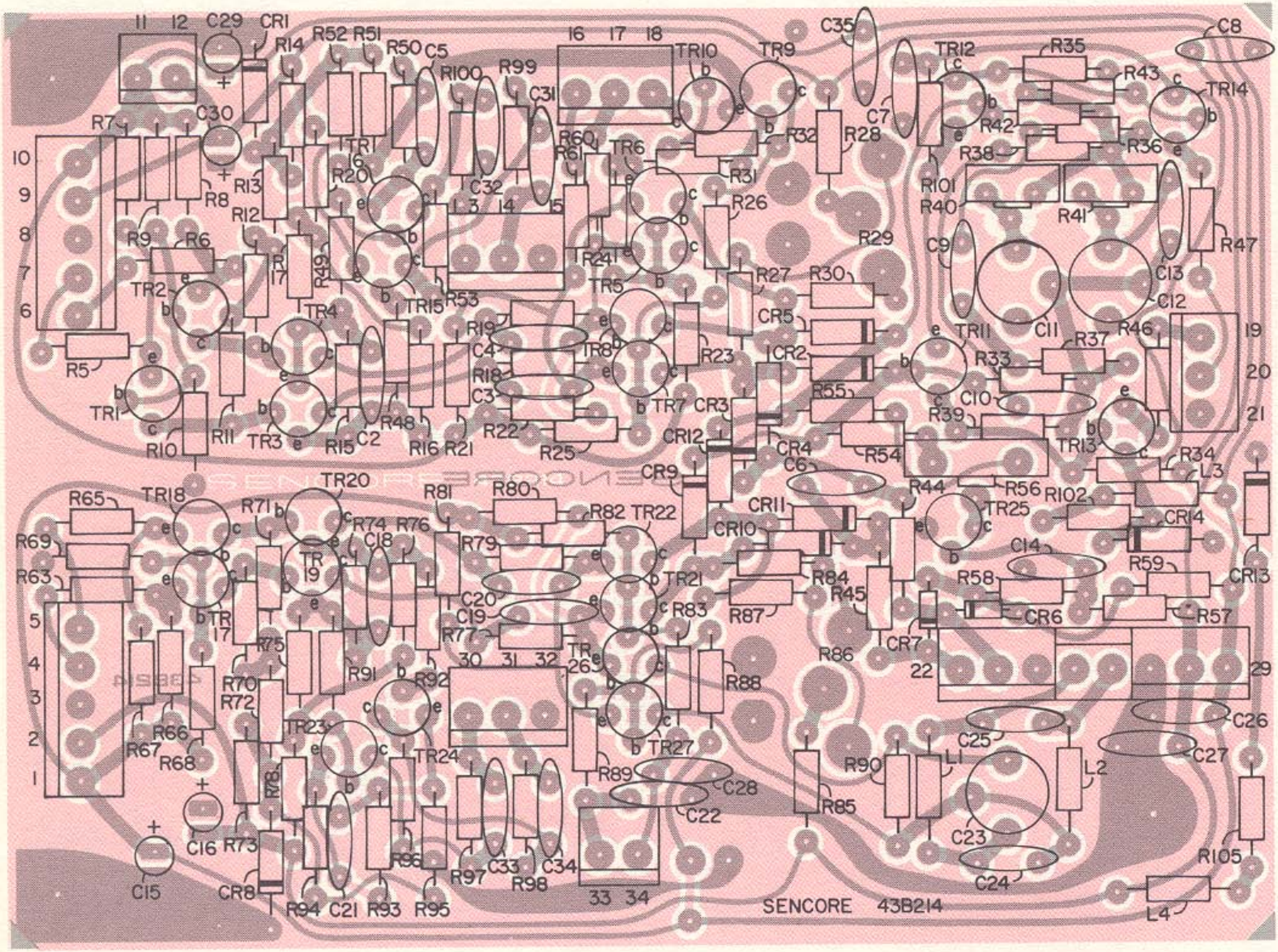

"2000" VERTICAL AMPLIFIER BOARD COMPONENT VIEW

ManualsPlus.com

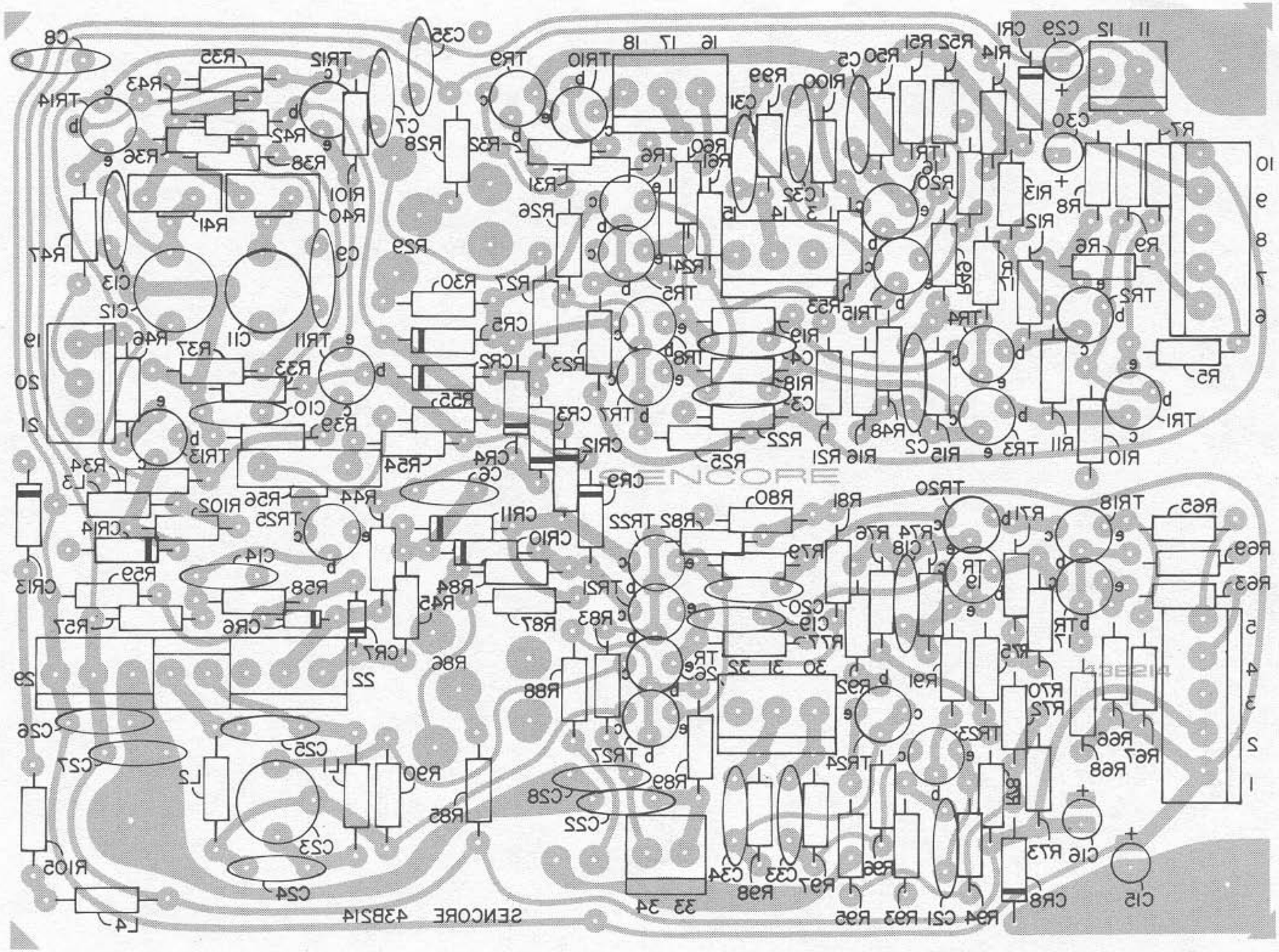

"2000" VERTICAL AMPLIFIER BOARD FOIL VIEW

ManualsPlus.com

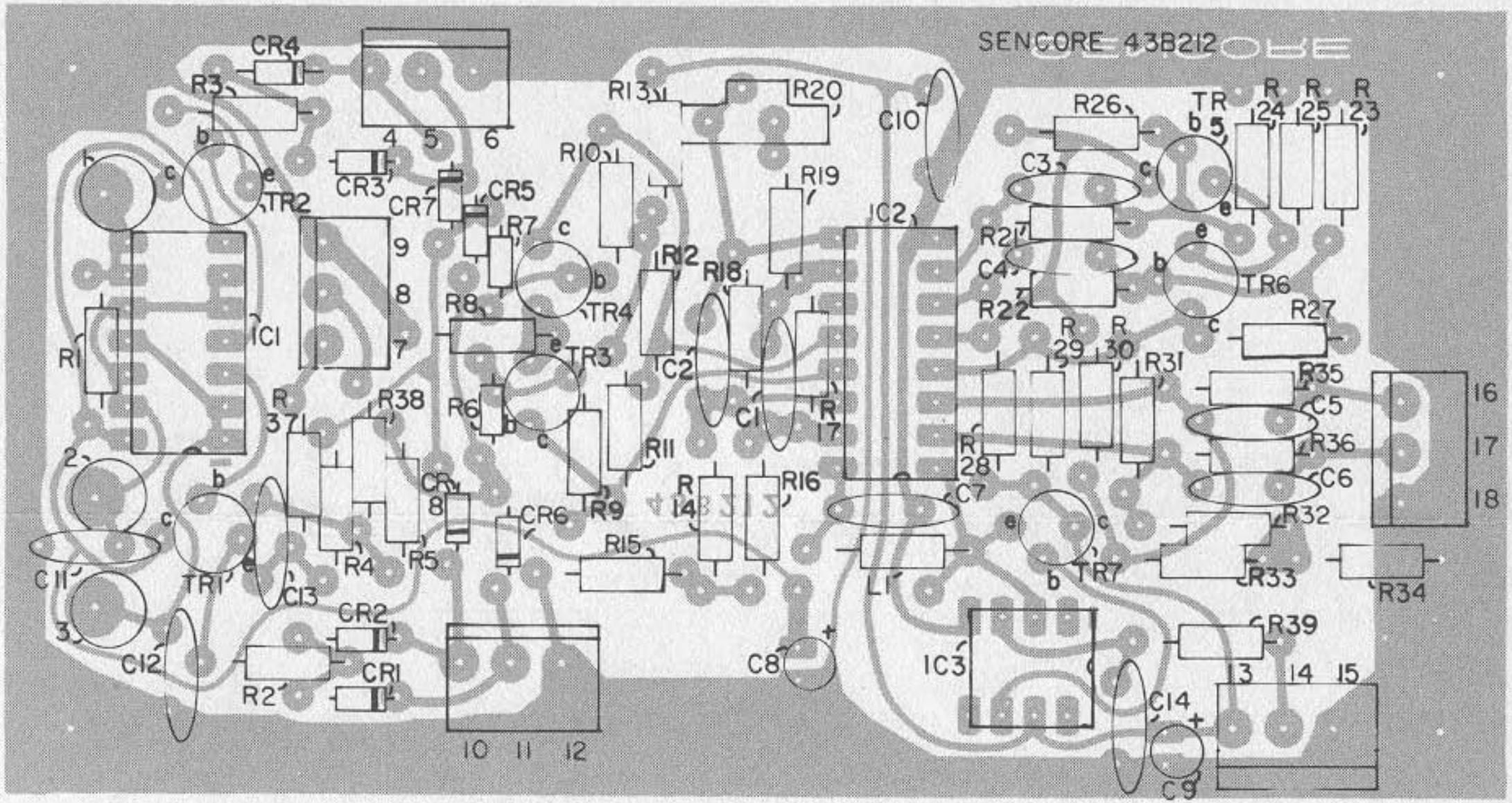

"3000" PEAK-TO-PEAK BOARD COMPONENT VIEW

ManualsPlus.com

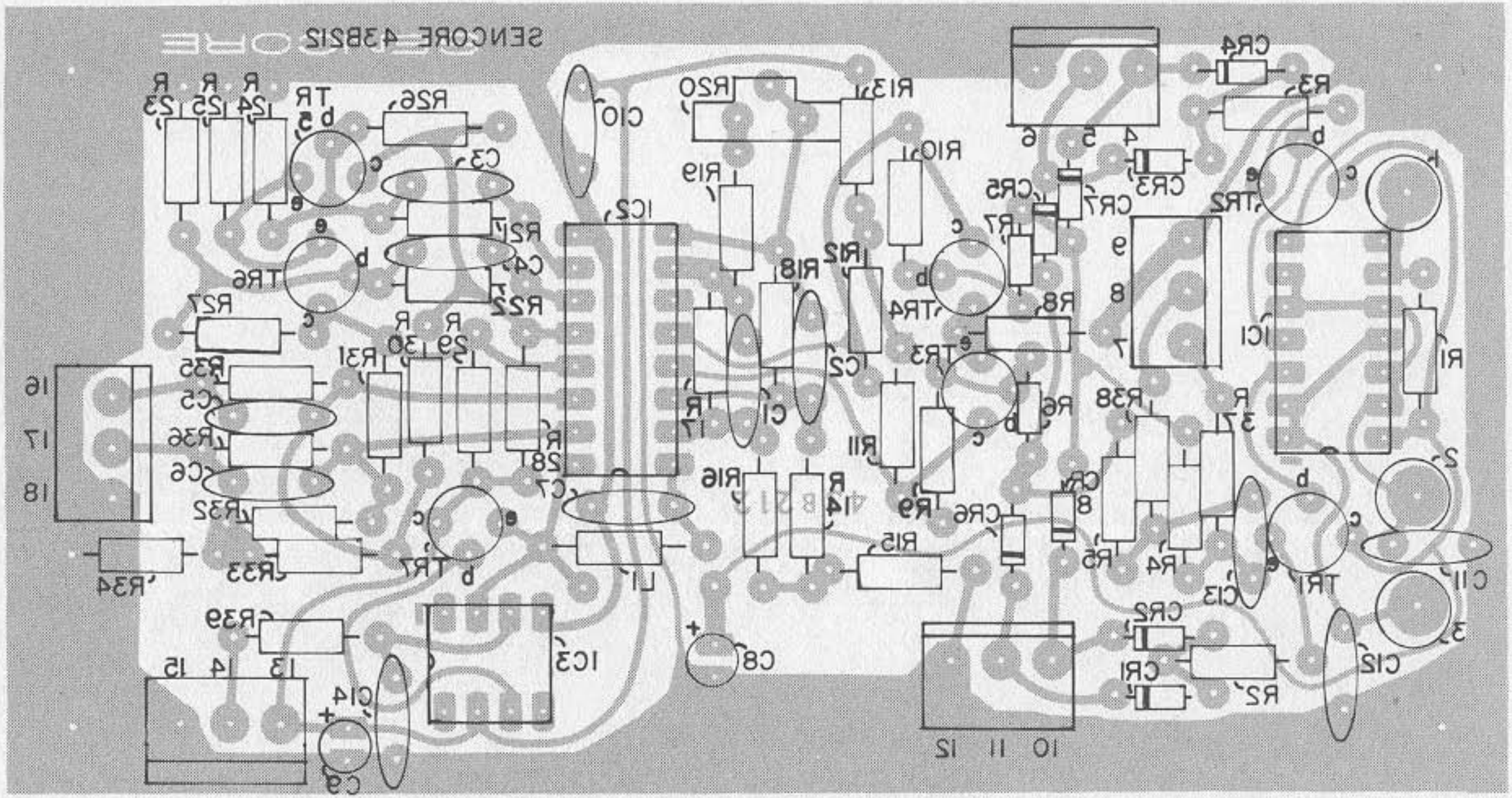

"3000" PEAK-TO-PEAK BOARD FOIL VIEW

ManualsPlus.com

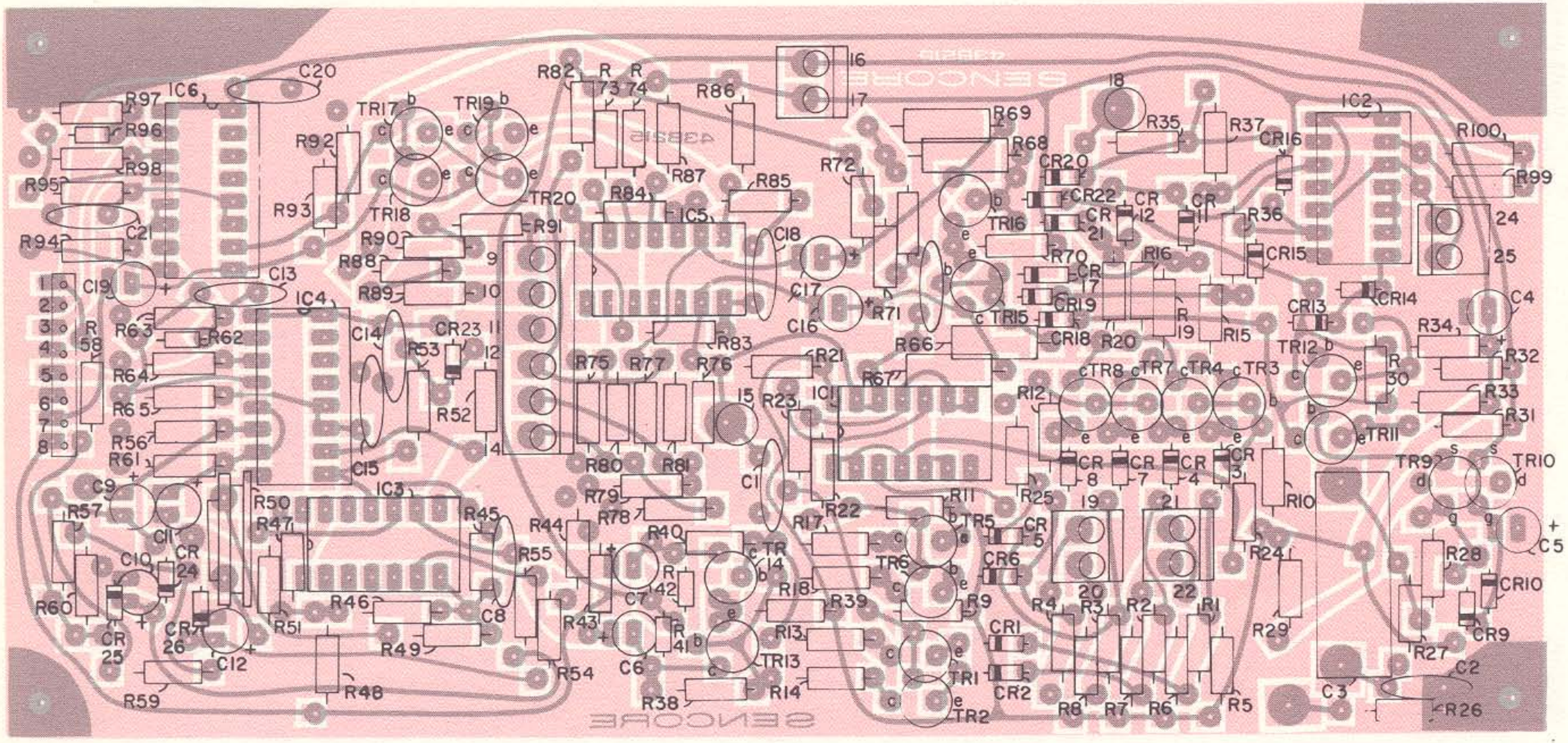

"4000" TRIGGER INPUT BOARD COMPONENT VIEW

ManualsPlus.com

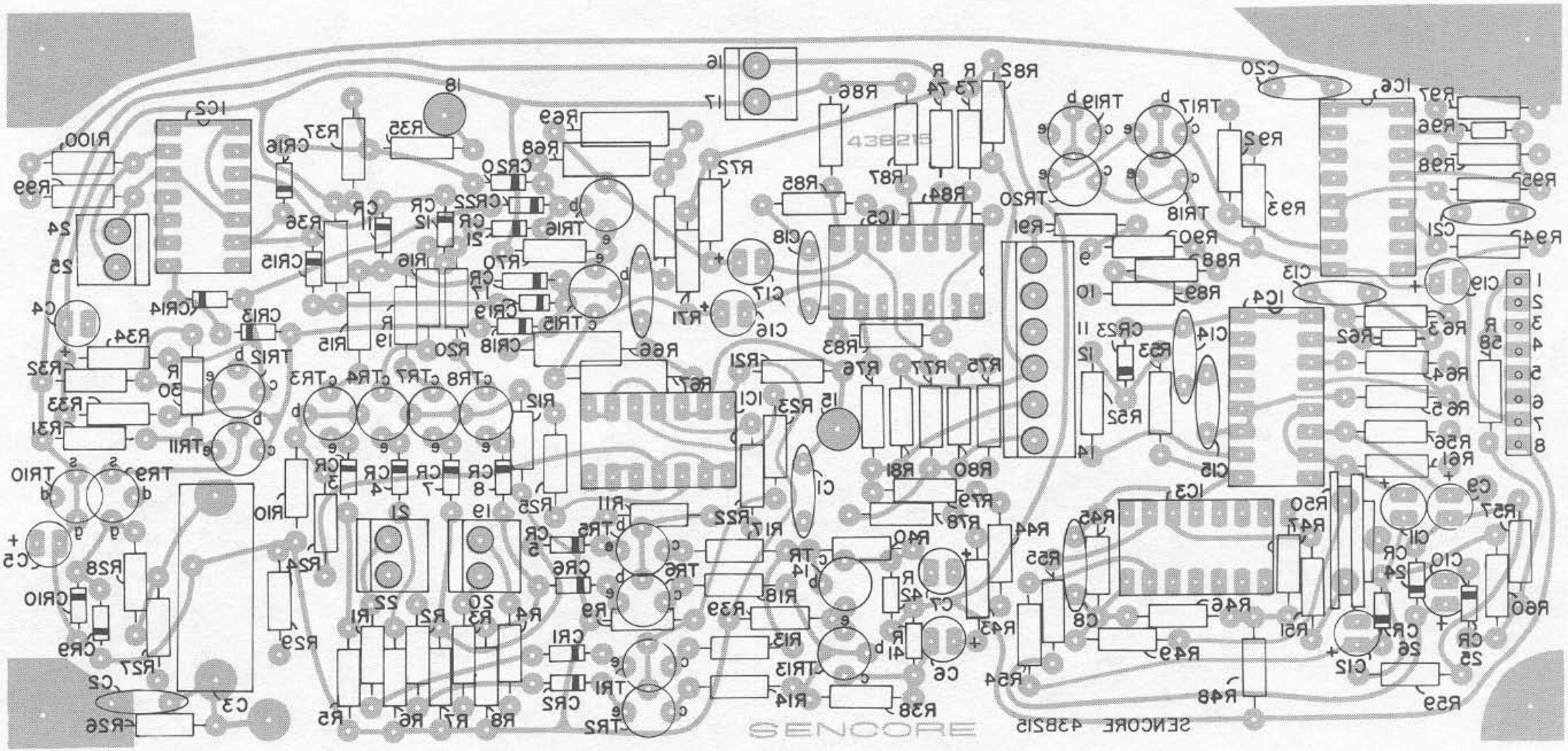

"4000" TRIGGER INPUT BOARD FOIL VIEW

ManualsPlus.com

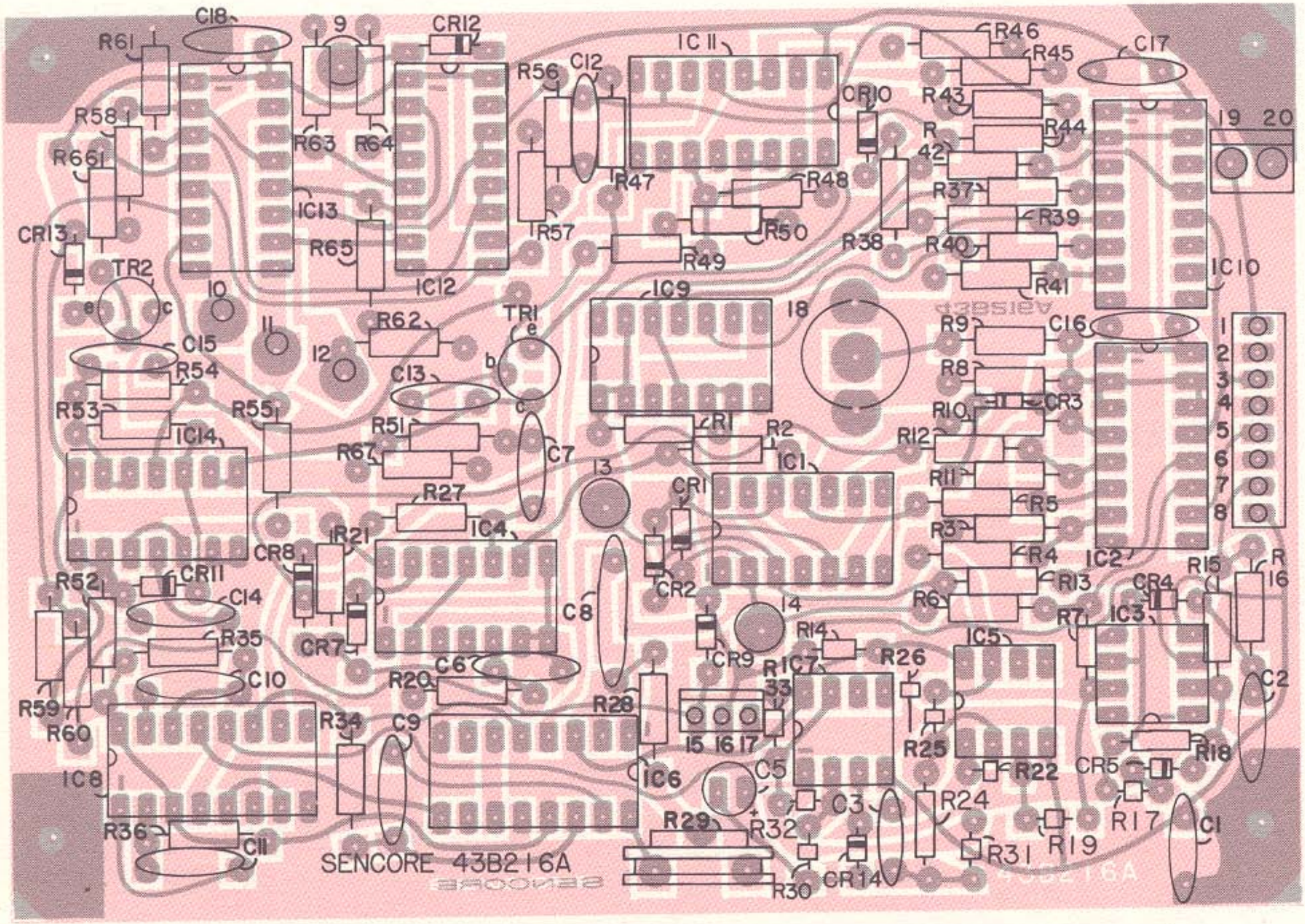

"5000" TRIGGER LOGIC BOARD COMPONENT VIEW

ManualsPlus.com

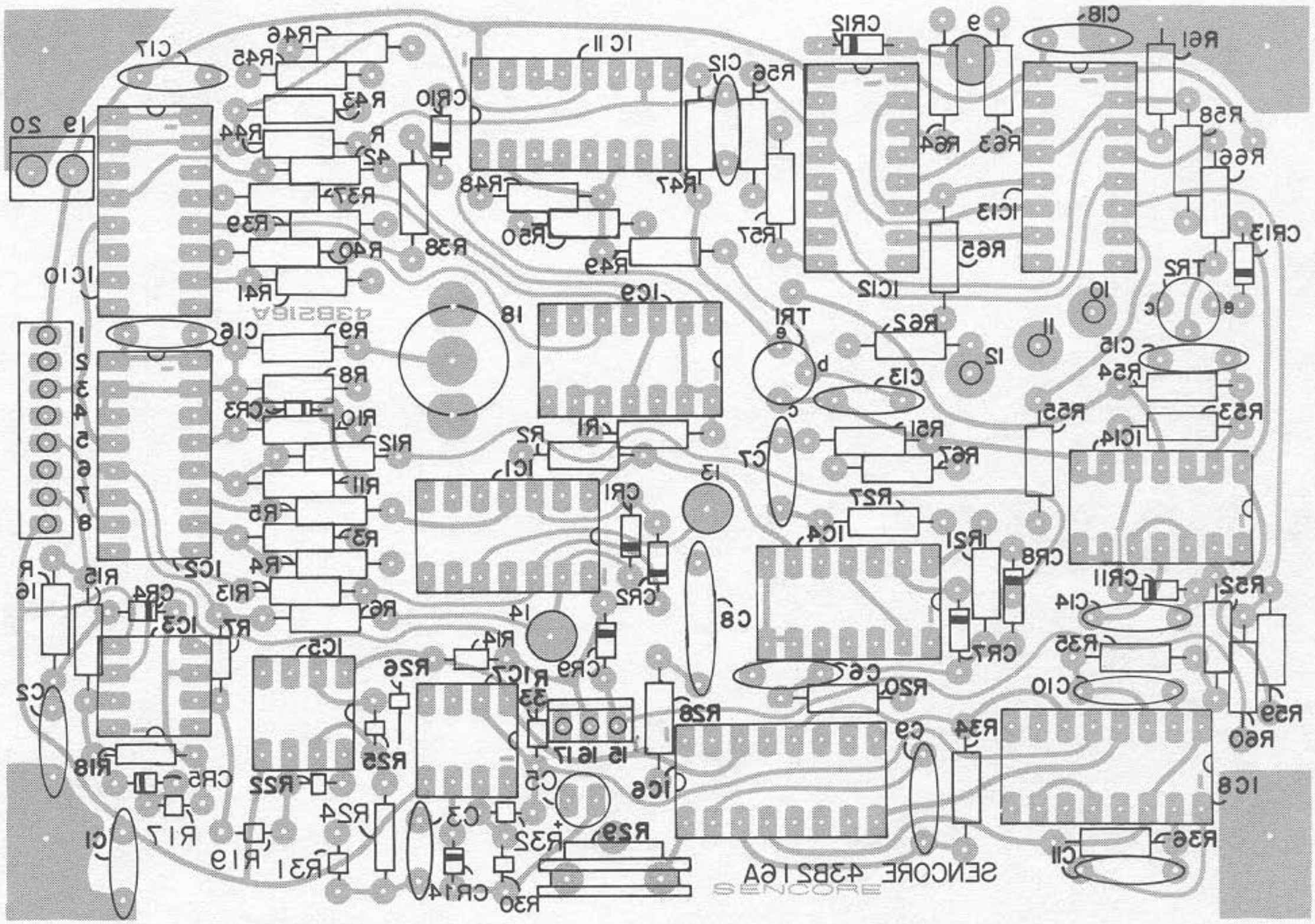

"5000" TRIGGER LOGIC BOARD FOIL VIEW

ManualsPlus.com

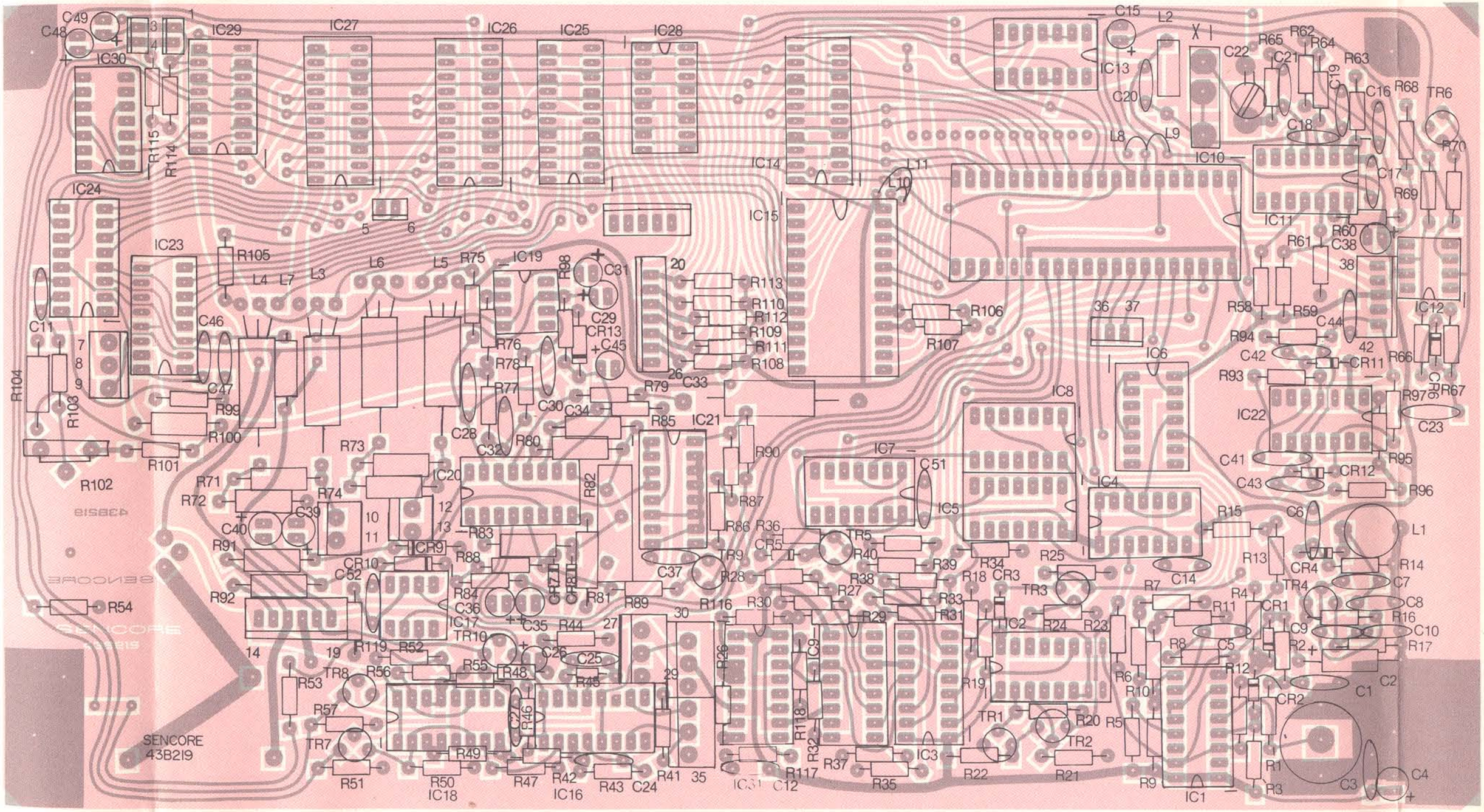

"7000" DIGITAL CONTROLLER BOARD COMPONENT VIEW

ManualsPlus.com

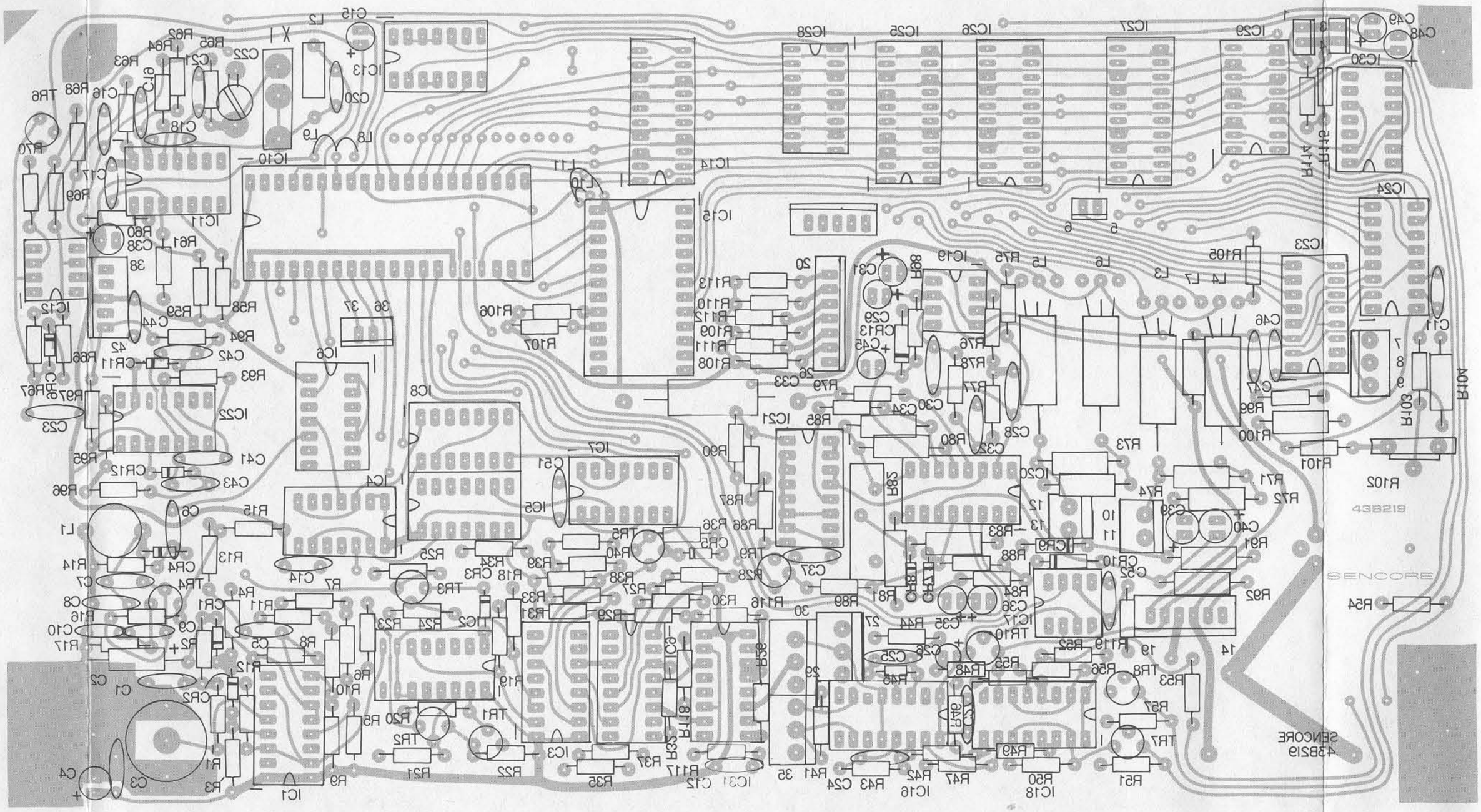

"7000" DIGITAL CONTROLLER BOARD FOIL VIEW

ManualsPlus.com

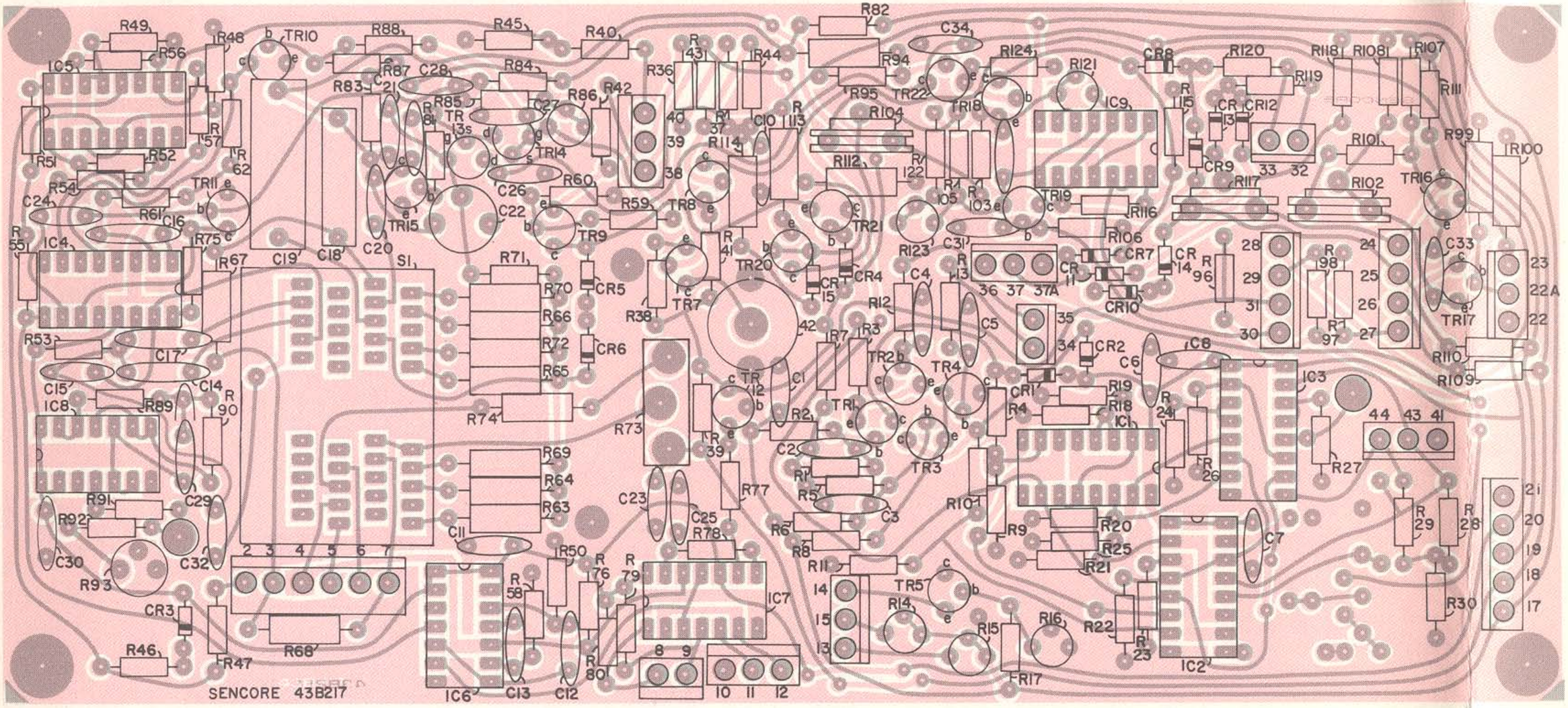

"8000" HORIZONTAL SWEEP BOARD COMPONENT VIEW

ManualsPlus.com

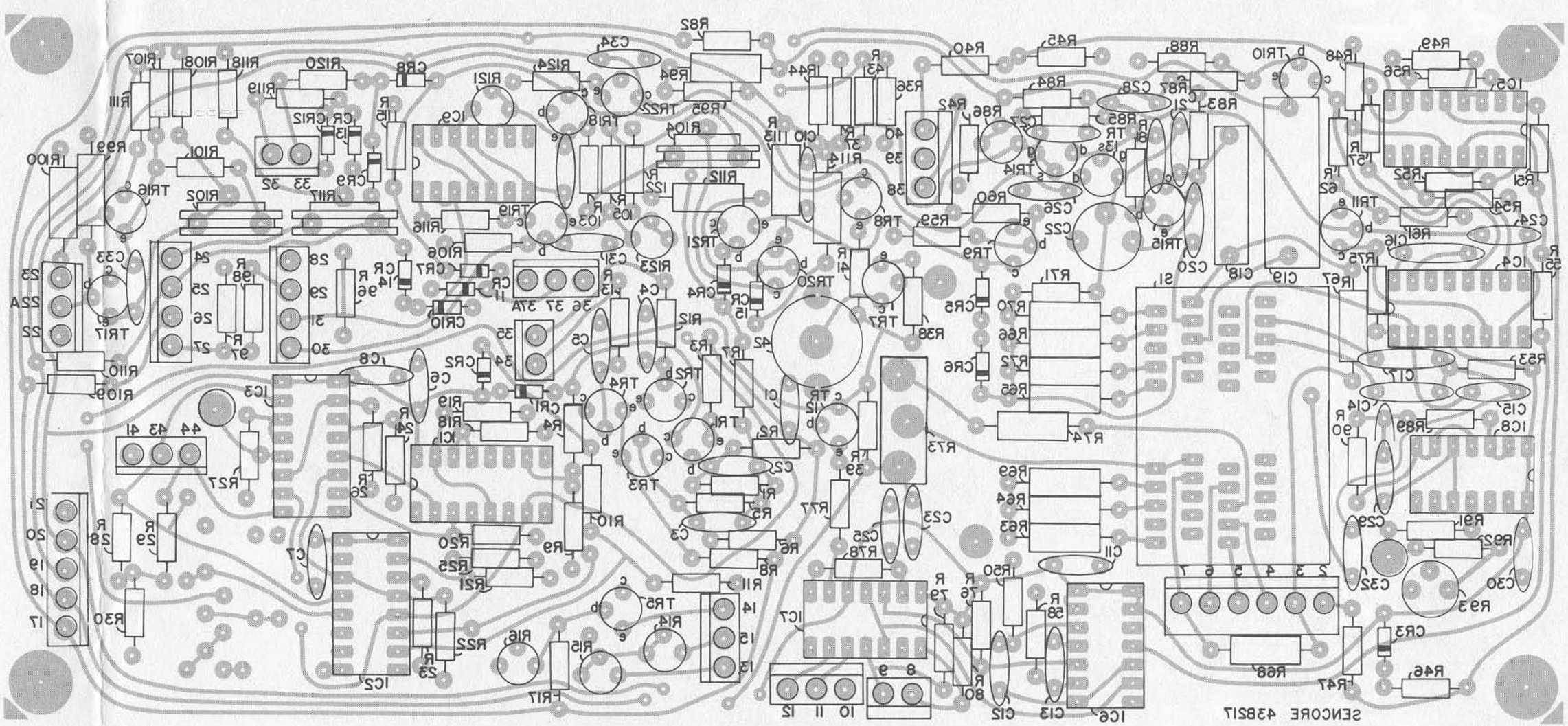

"8000" HORIZONTAL SWEEP BOARD FOIL VIEW

ManualsPlus.com

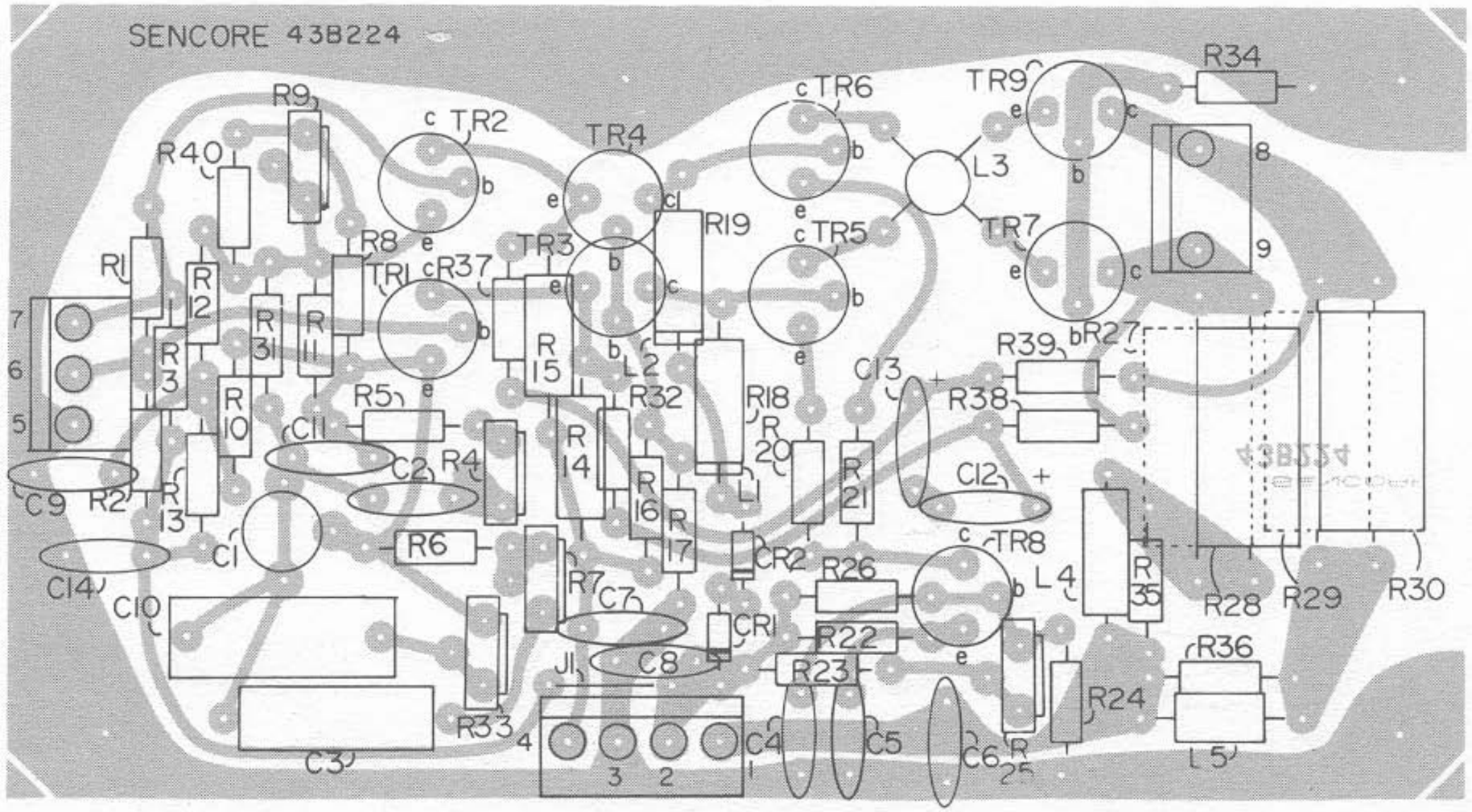

"9000" VERTICAL OUTPUT BOARD COMPONENT VIEW

ManualsPlus.com

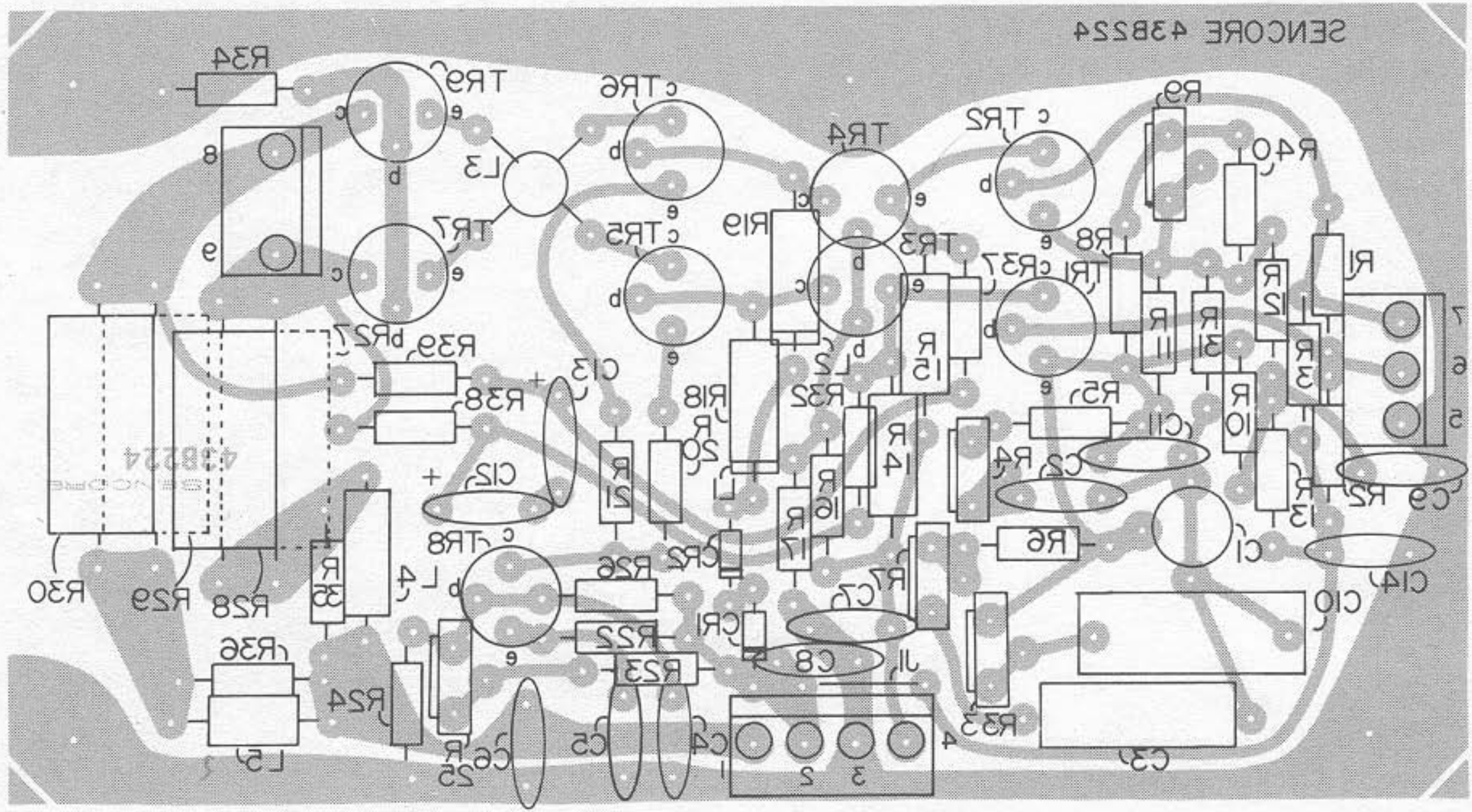

"9000" VERTICAL OUTPUT BOARD FOIL VIEW

ManualsPlus.com

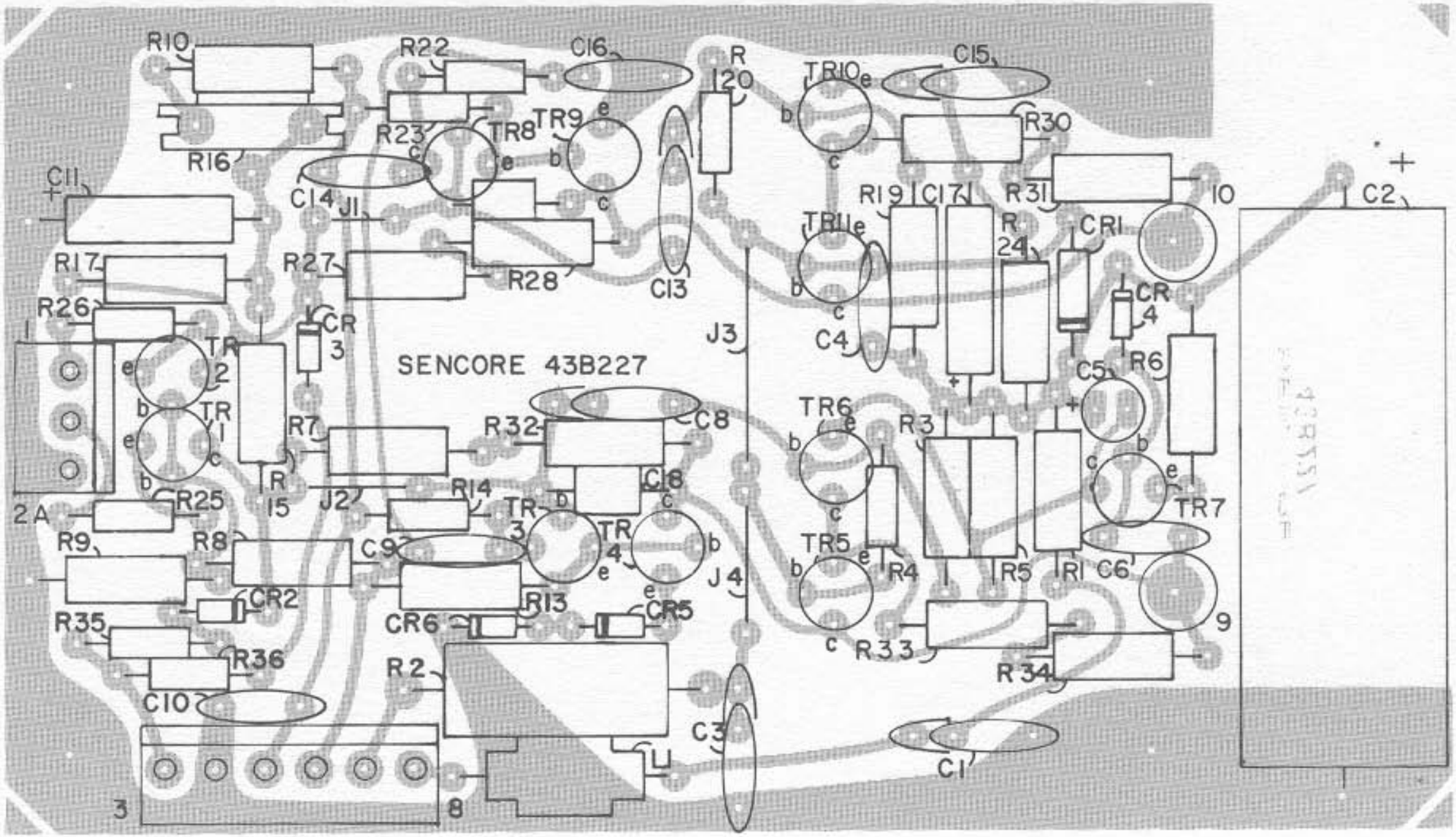

"10000" HORIZONTAL OUTPUT BOARD COMPONENT VIEW

ManualsPlus.com

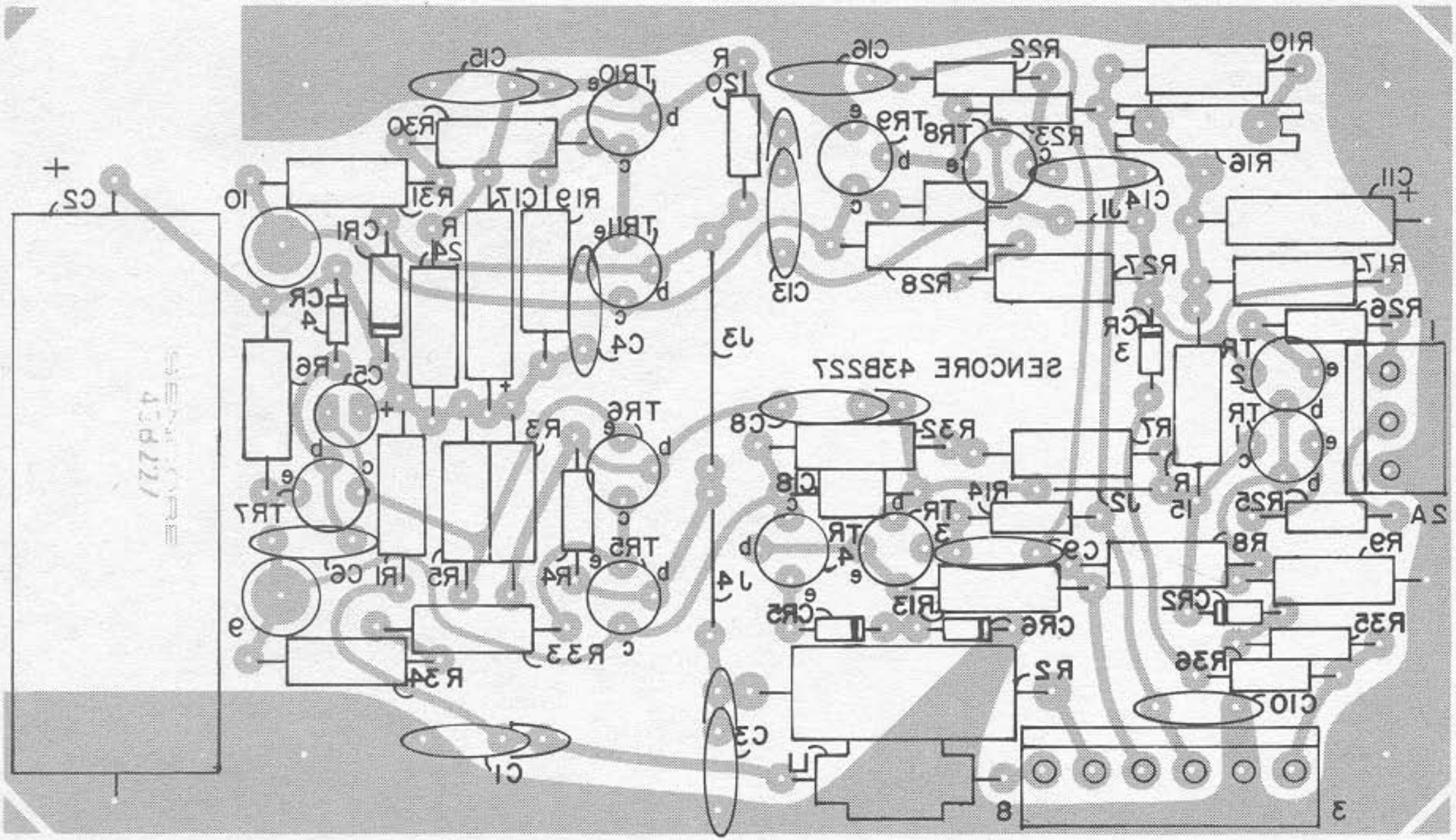

"10000" HORIZONTAL OUTPUT BOARD FOIL VIEW

ManualsPlus.com

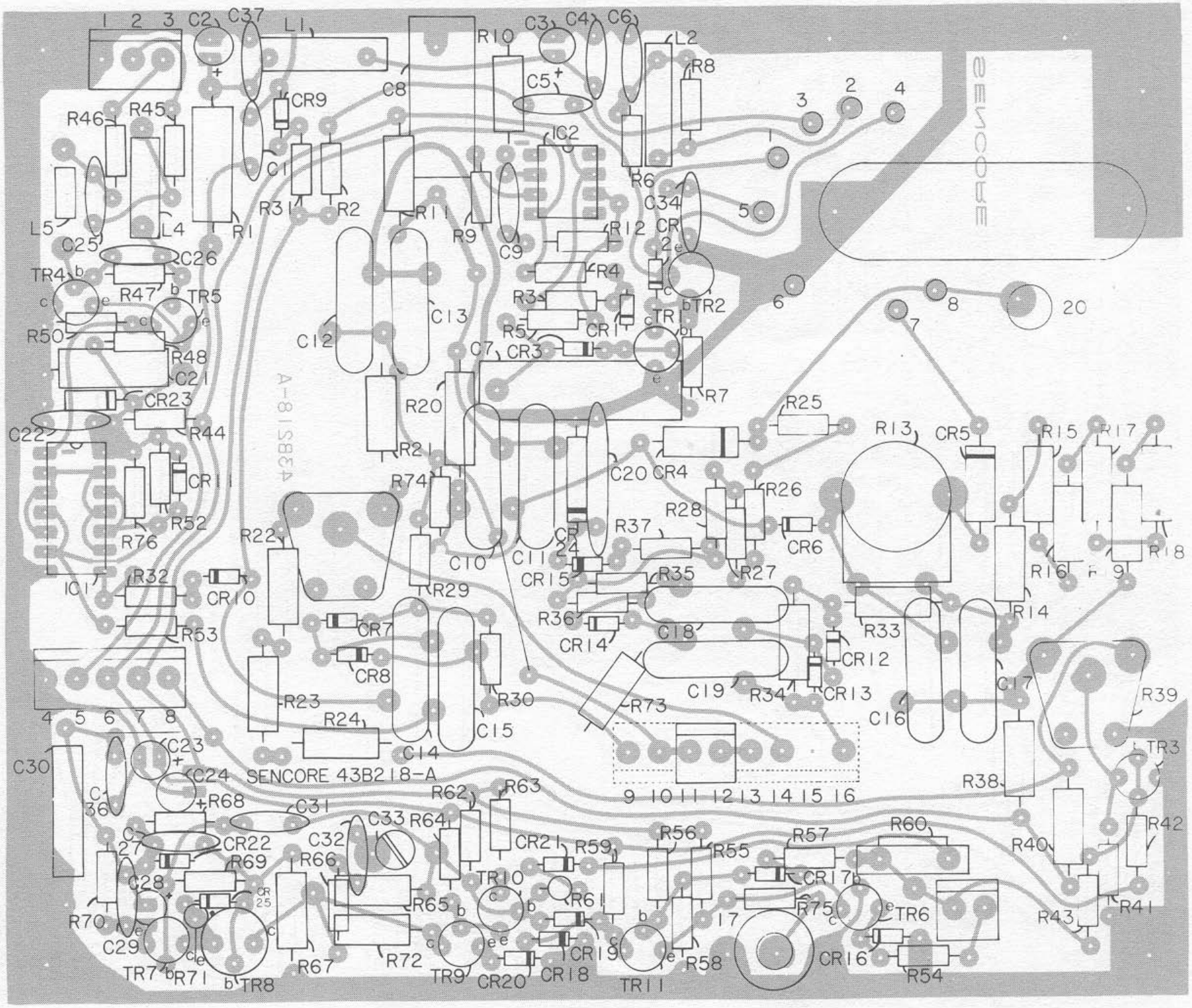

"11000" HIGH VOLTAGE POWER SUPPLY BOARD COMPONENT VIEW

ManualsPlus.com

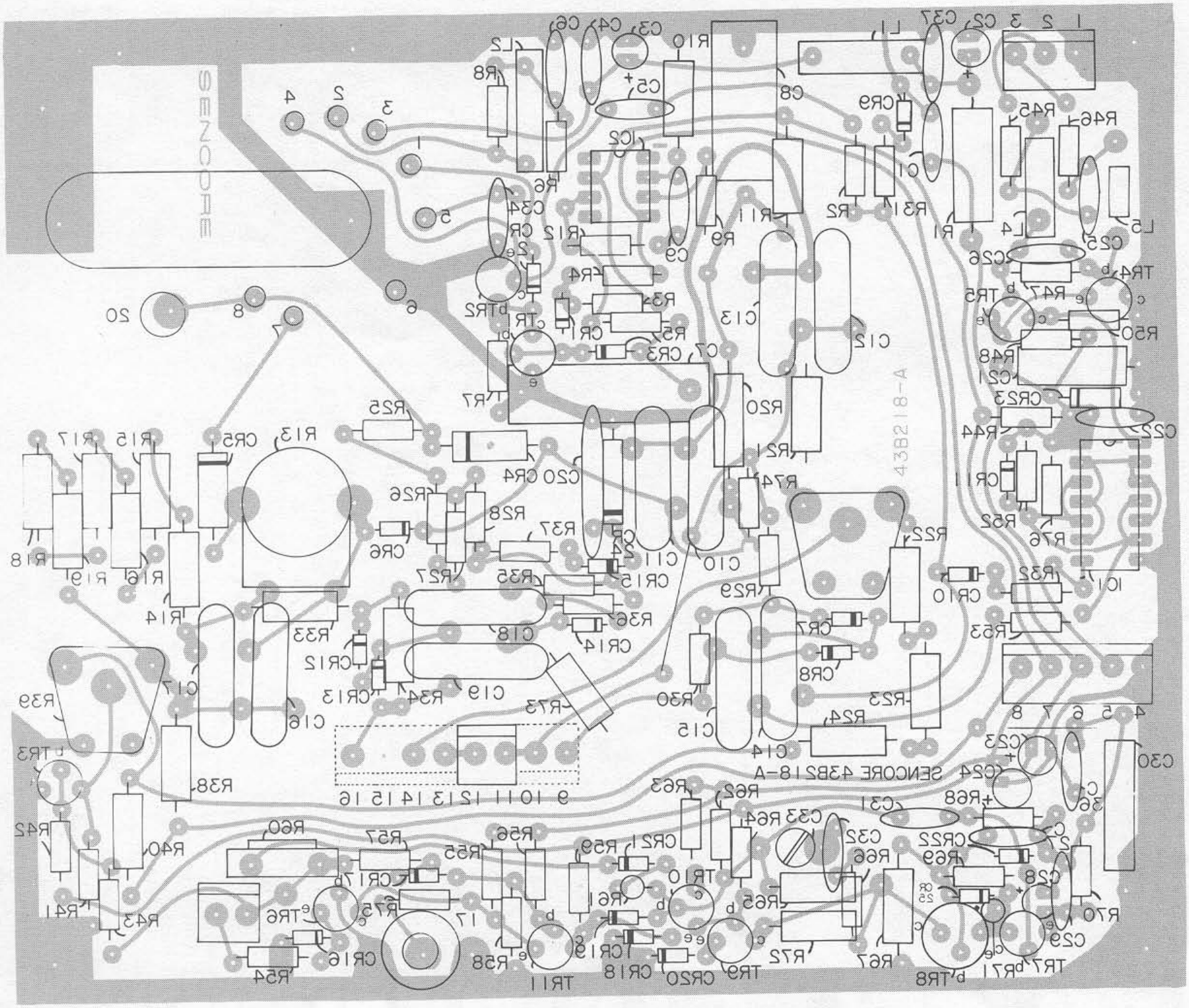

"11000" HIGH VOLTAGE POWER SUPPLY BOARD FOIL VIEW

ManualsPlus.com

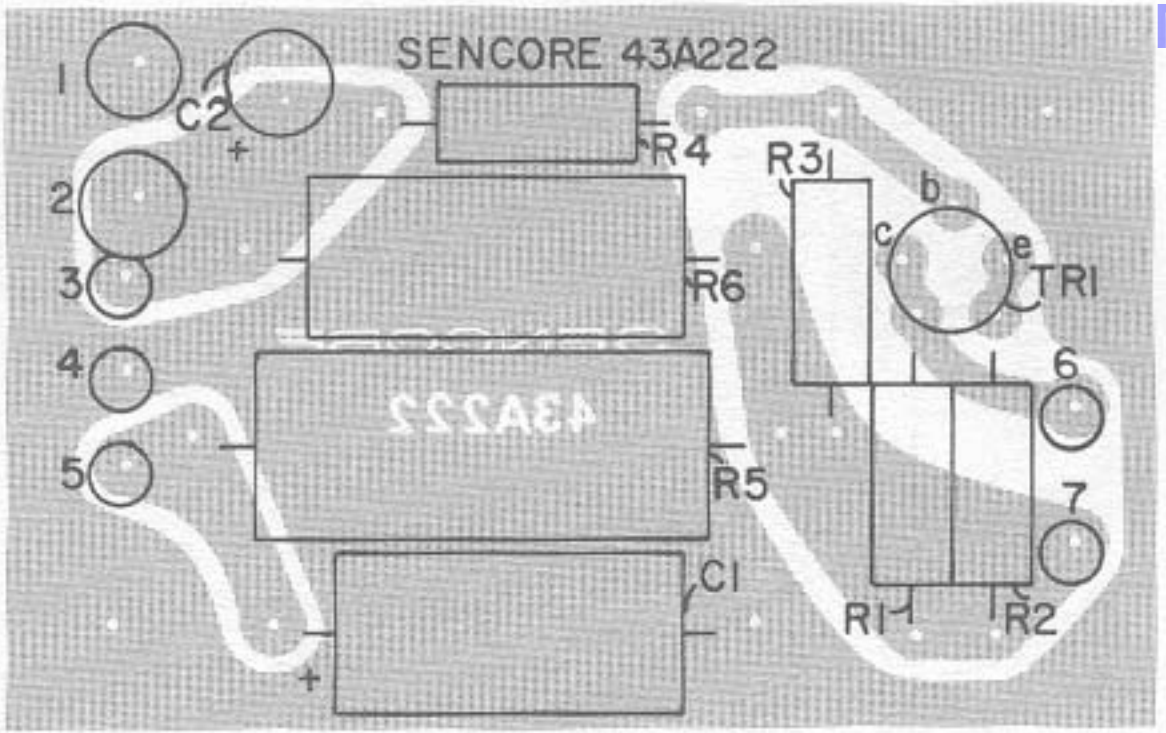

"12000" REGULATOR BOARD COMPONENT VIEW

ManualsPlus.com

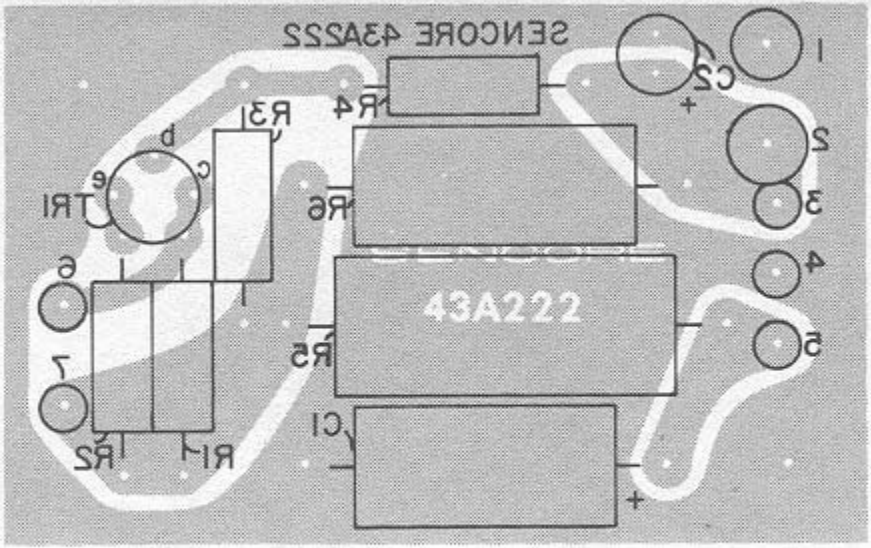

"12000" REGULATOR BOARD FOIL VIEW

ManualsPlus.com

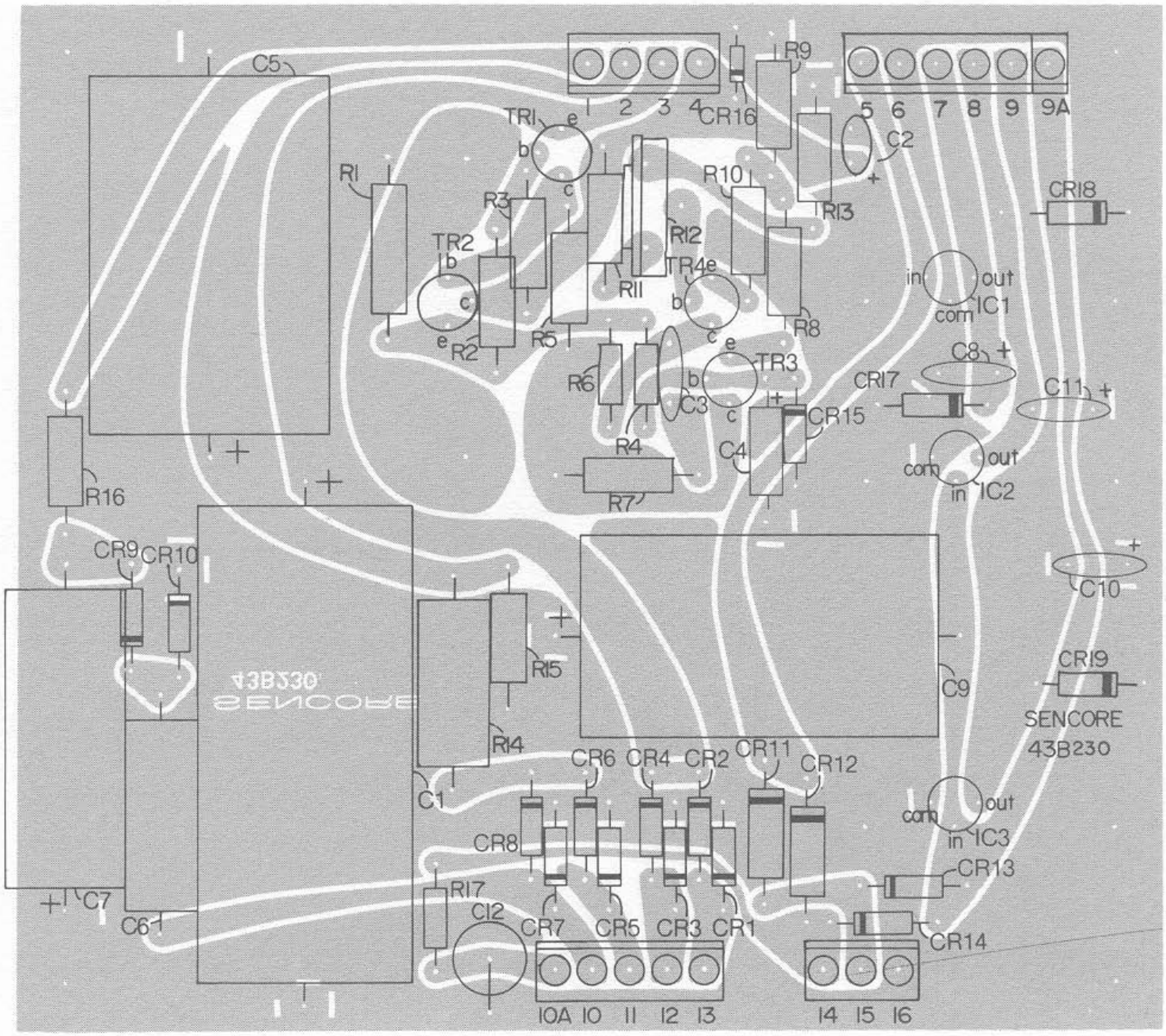

"13000" LOW VOLTAGE POWER SUPPLY BOARD COMPONENT VIEW

ManualsPlus.com

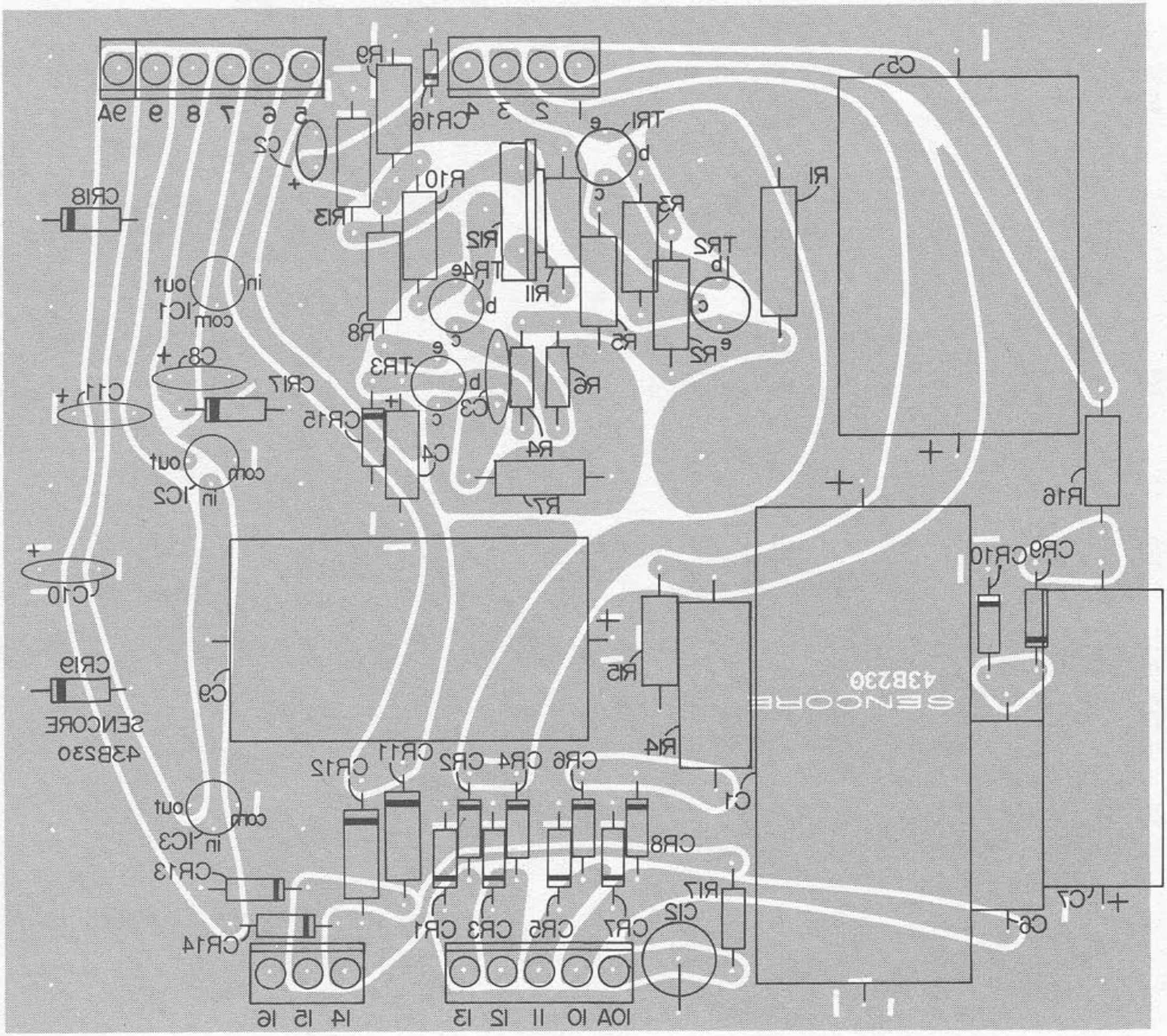

"13000" LOW VOLTAGE POWER SUPPLY BOARD FOIL VIEW

ManualsPlus.com

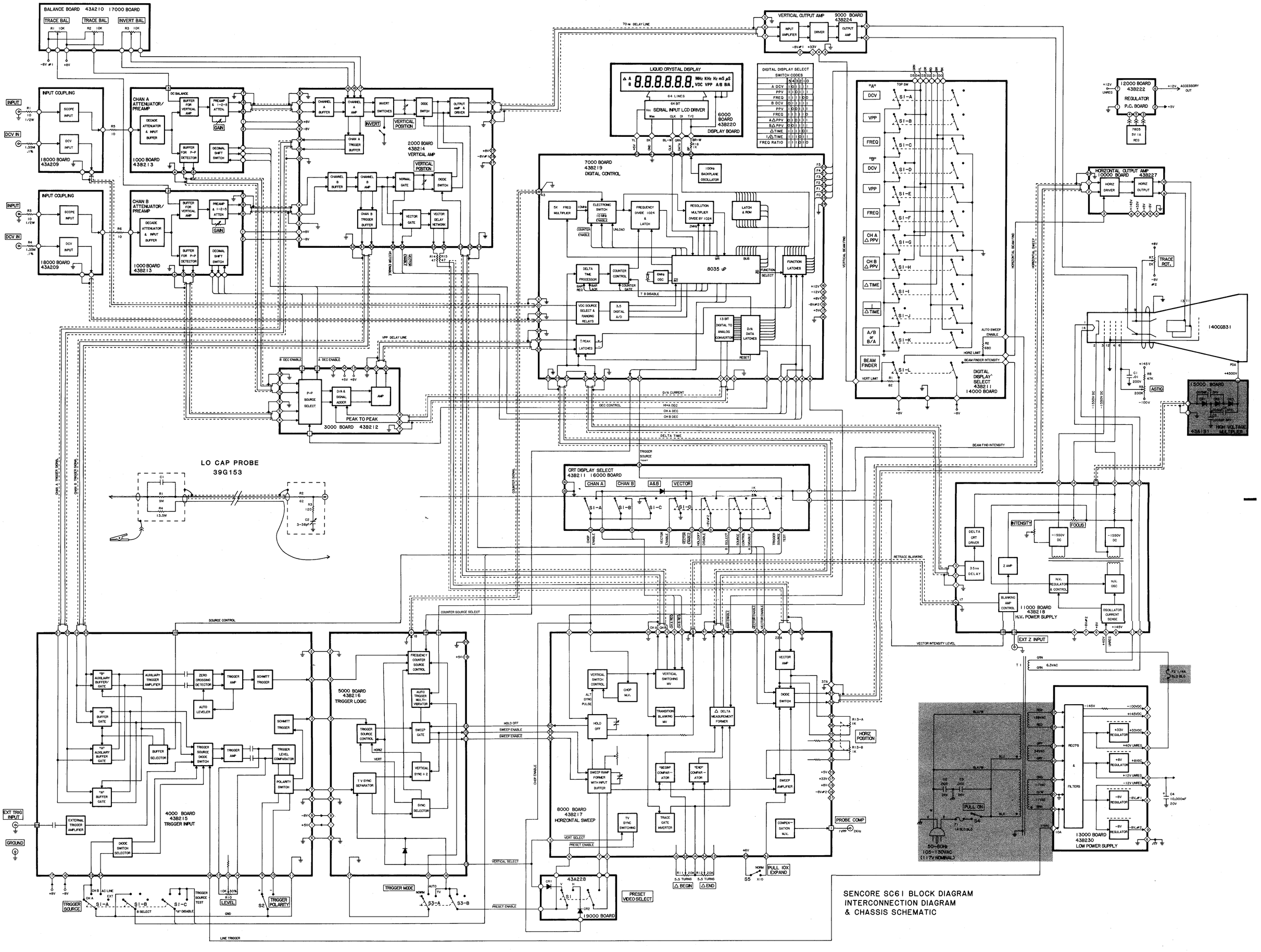

SC61 BLOCK DIAGRAM

Form 2252

This sheet includes block diagram and board number 7000.

SHEET 3

ManualsPlus.com

SPECIAL SC61 NOTES

THE AC POWER SWITCH

The SC61 instruction manual does not clearly point out the location of the AC power switch. *Turn the SC61 on by pulling the INTENSITY control in the lower left-hand corner.* This control is number 41 on the control photograph on the fold out of page 6 in the instruction manual.

IMPROVED DC INPUT CIRCUIT

The DCV input jack for channel A and B of your SC61 has an added filter that prevents AC signals (picked up by the special DC voltage lead in the supplied low-capacity probes) from adding to the CRT display. The filter improves performance in certain applications involving measurements in strong AC fields. The operation of the SC61 is not changed by this circuit improvement when you use the supplied probes.

Always use the supplied probes to make DC measurements. These probes include a 10:1 DC divider resistor that isolates the SC61 DC measuring circuits from the circuit under test, provides direct DC readings, and increases the DC measuring impedance to 15 megohms for minimum circuit loading. The (supplied) 39G153 Low Capacity Probes or the (supplied) 39G157 DCV Probe allows DC measurements to 200 volts. The DC measuring range may be increased to 10,000 volts by using the (optional) TP212 Transient Protector Probe, or to 50,000 volts by using the (optional) HP200 High Voltage Probe, as explained on pages 31 and 32 of the instruction manual.

The special filter reduces the maximum DC input that may safely be applied to the DC input jacks using a direct connection (without the supplied isolation probes) from the 500 volts (DC plus peak AC) rating listed in the specifications to 200 volts (DC plus peak AC). This causes no problem when using the SC61 because the isolation probes should always be used for DC measurements. A direct (non-isolated) connection leads to two application problems: 1. The input impedance of the direct input is only 1.5 megohms which will cause DC loading errors in many circuits, and 2. The DC voltage readings require the decimal to be moved because the digital display is calibrated to read directly when using the supplied 10:1 isolation probes.

New input coupling circuit (2 used).

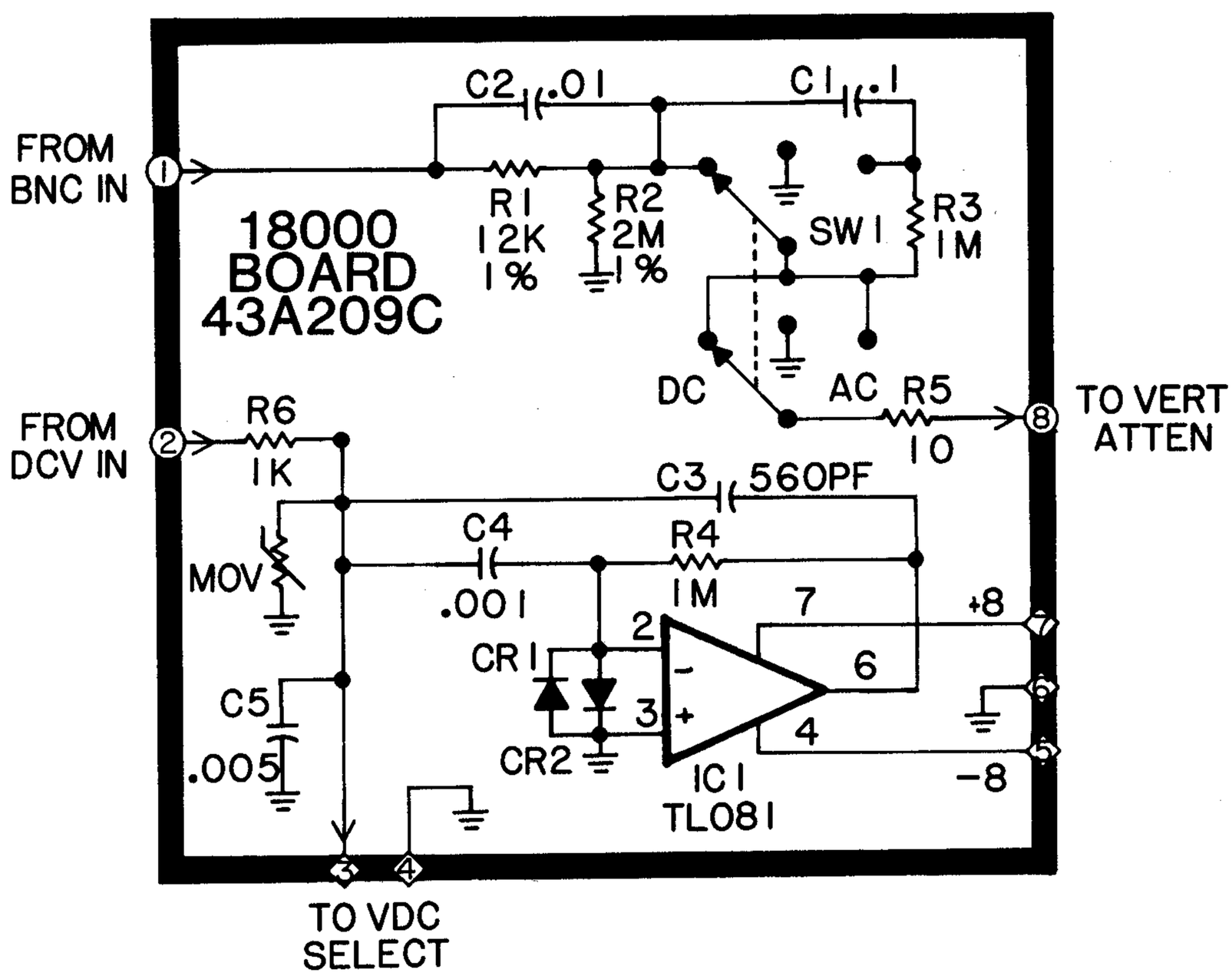

SENCORE
3200 Sencore Drive
Sioux Falls, South Dakota 57107

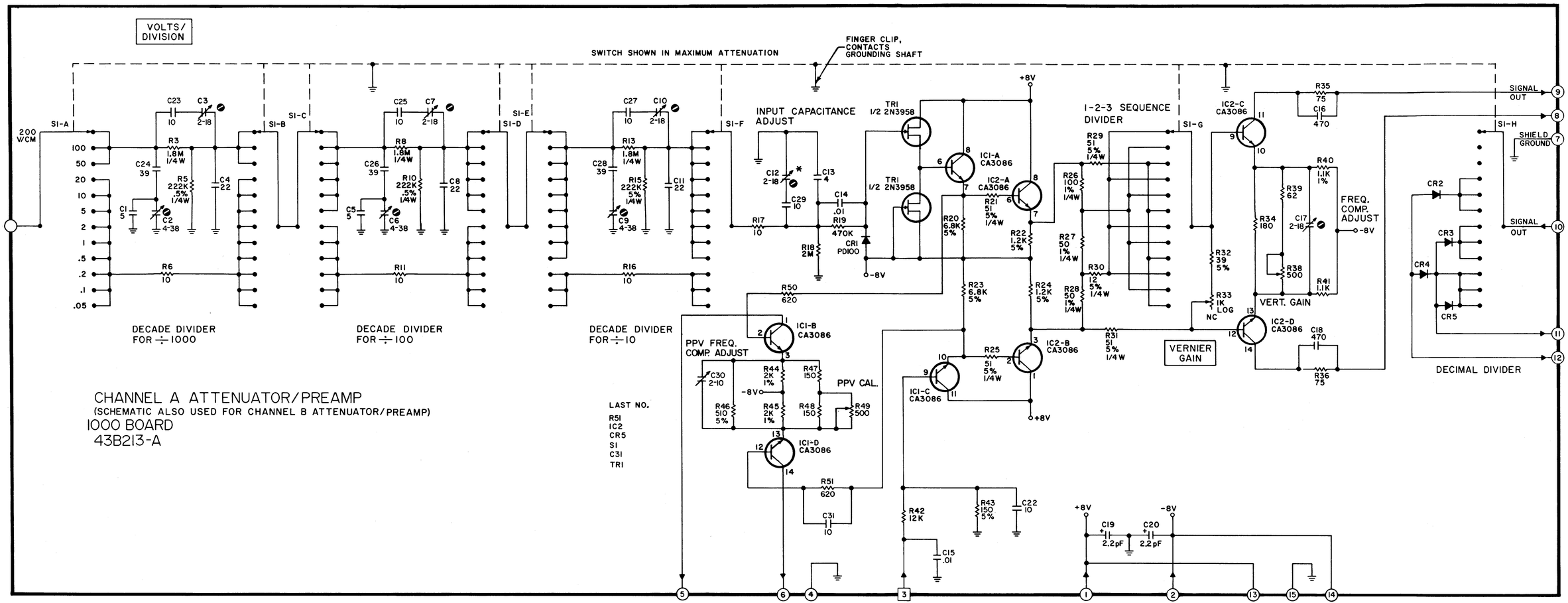

"1000" ATTENUATOR/PREAMPLIFIER BOARD SCHEMATIC

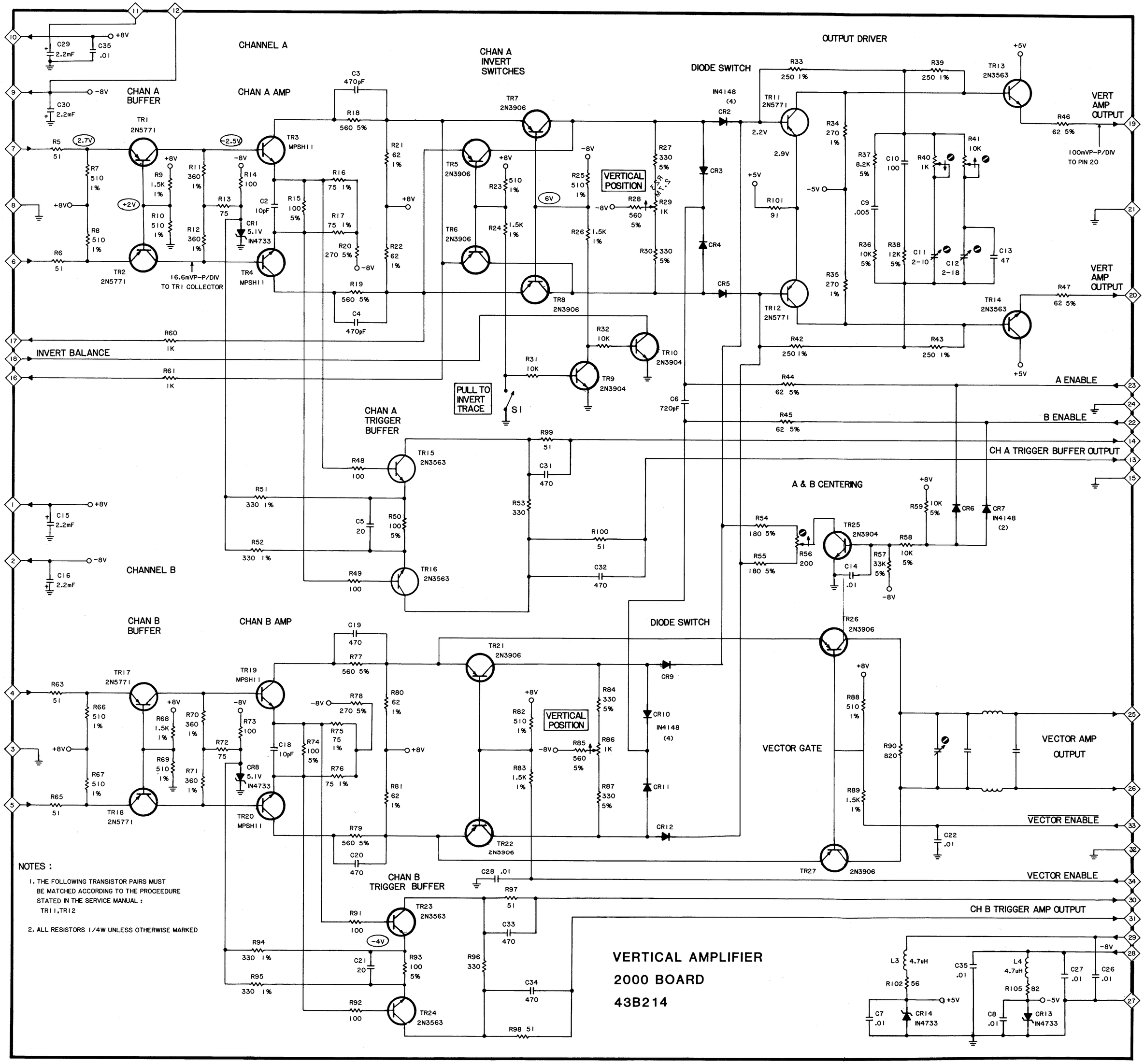

NOTES :

1. THE FOLLOWING TRANSISTOR PAIRS MUST BE MATCHED ACCORDING TO THE PROCEEDURE STATED IN THE SERVICE MANUAL : TR11,TR12

2. ALL RESISTORS 1/4W UNLESS OTHERWISE MARKED

"2000" VERTICAL AMPLIFIER BOARD SCHEMATIC

ManualsPlus.com

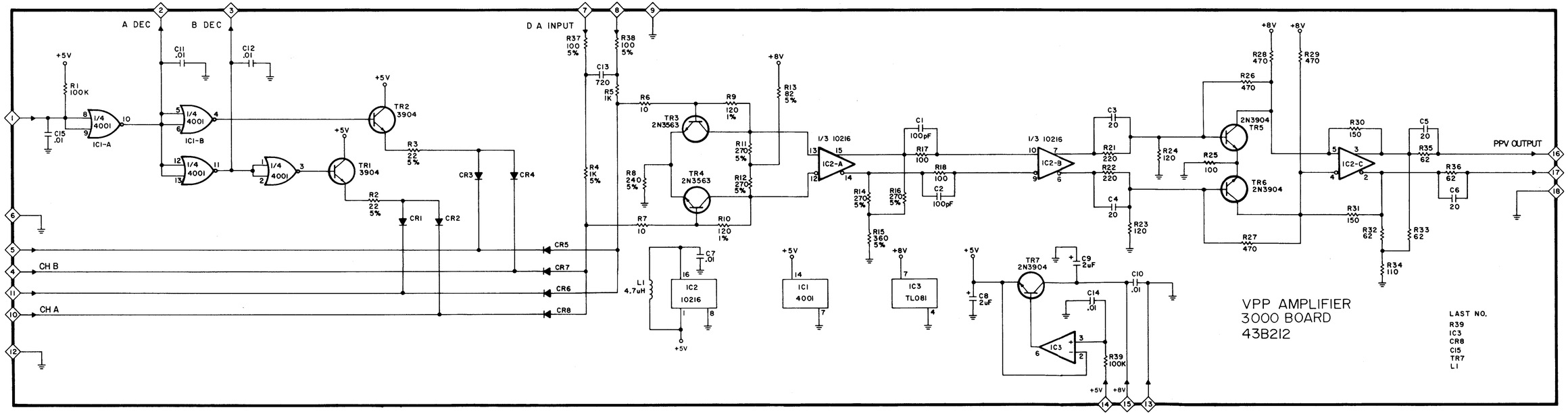

"3000" PEAK-TO-PEAK BOARD SCHEMATIC

Form 2252

ManualsPlus.com

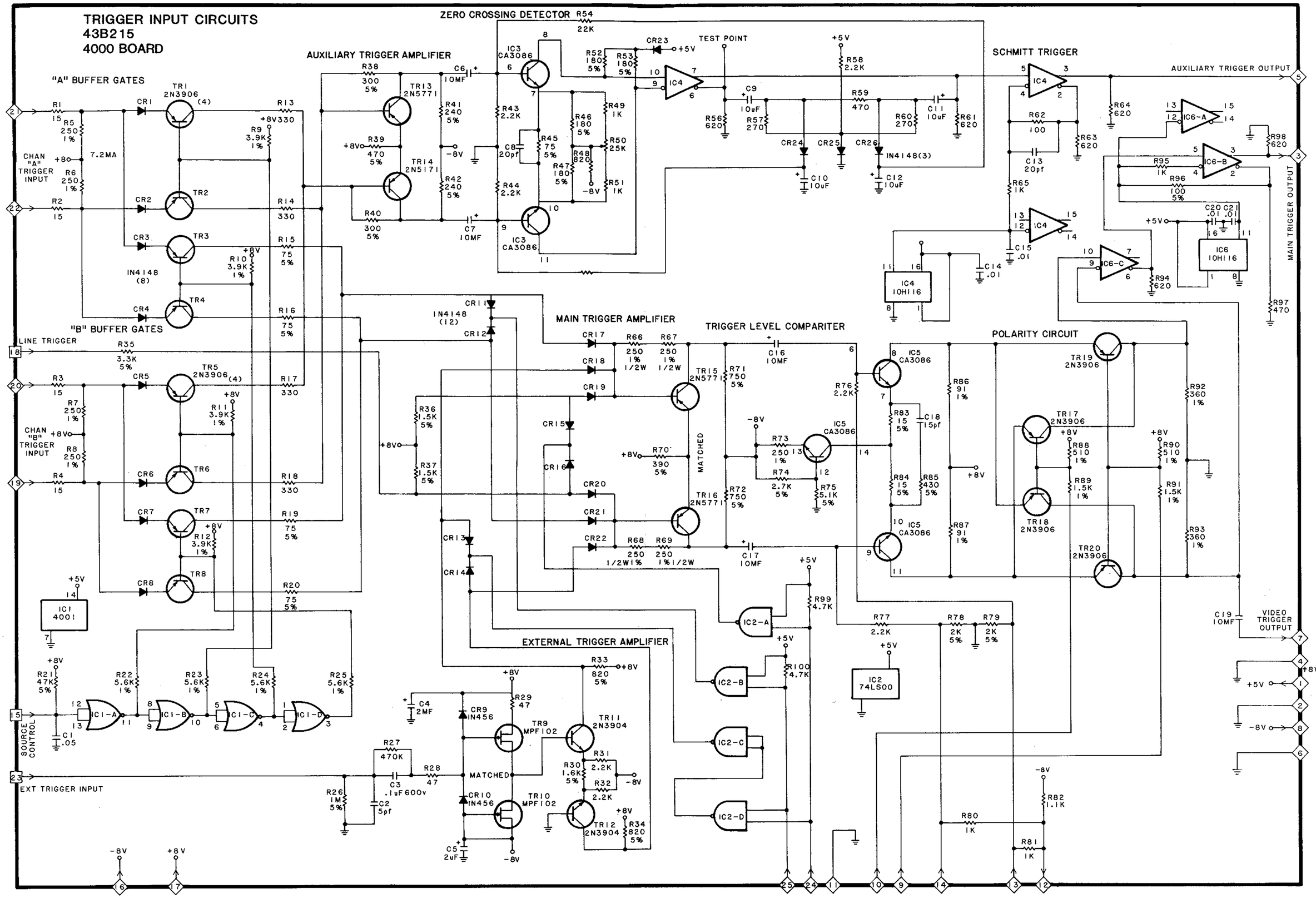

"4000" TRIGGER INPUT BOARD SCHEMATIC

ManualsPlus.com

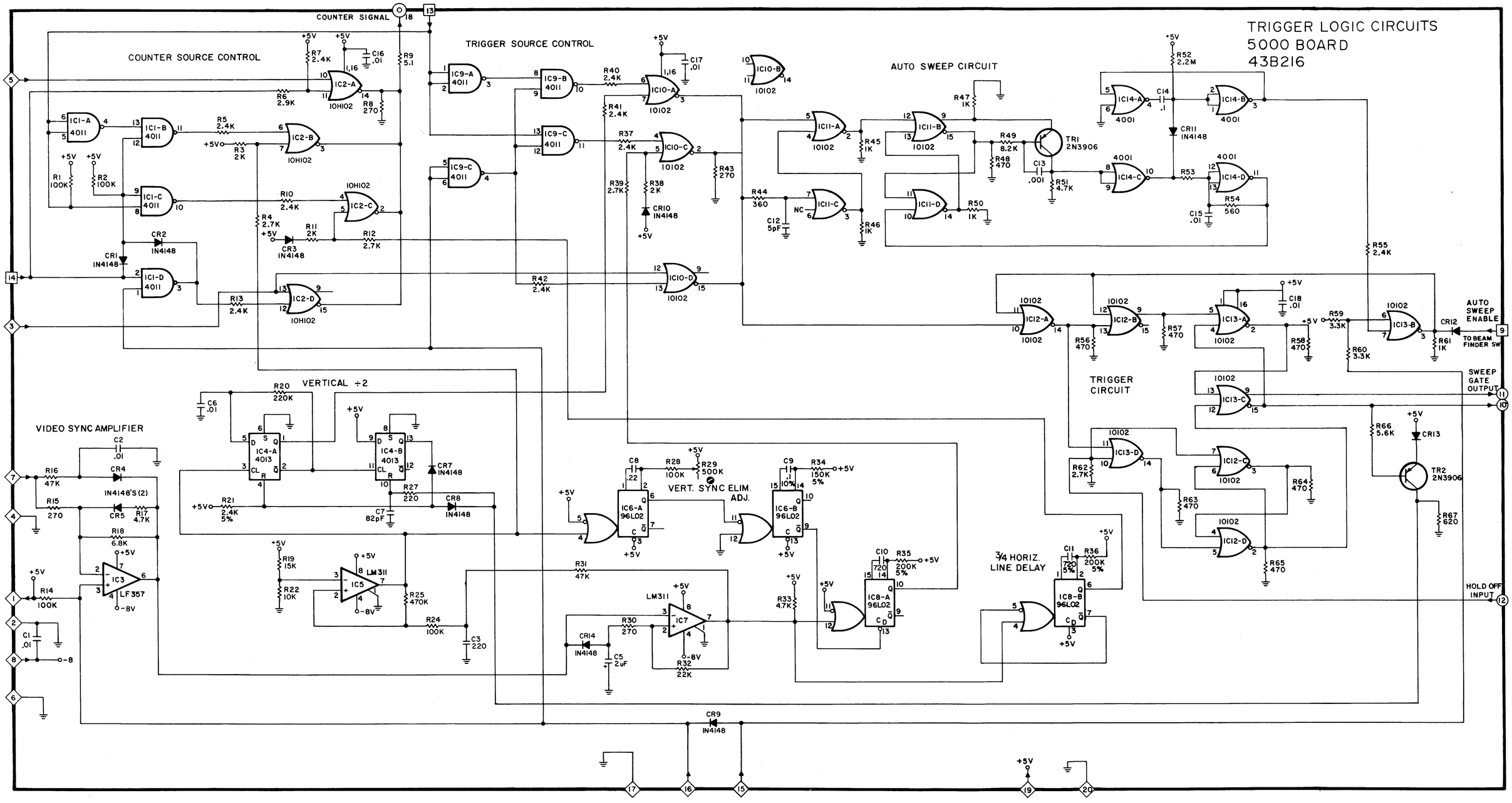

"5000" TRIGGER LOGIC BOARD SCHEMATIC

ManualsPlus.com

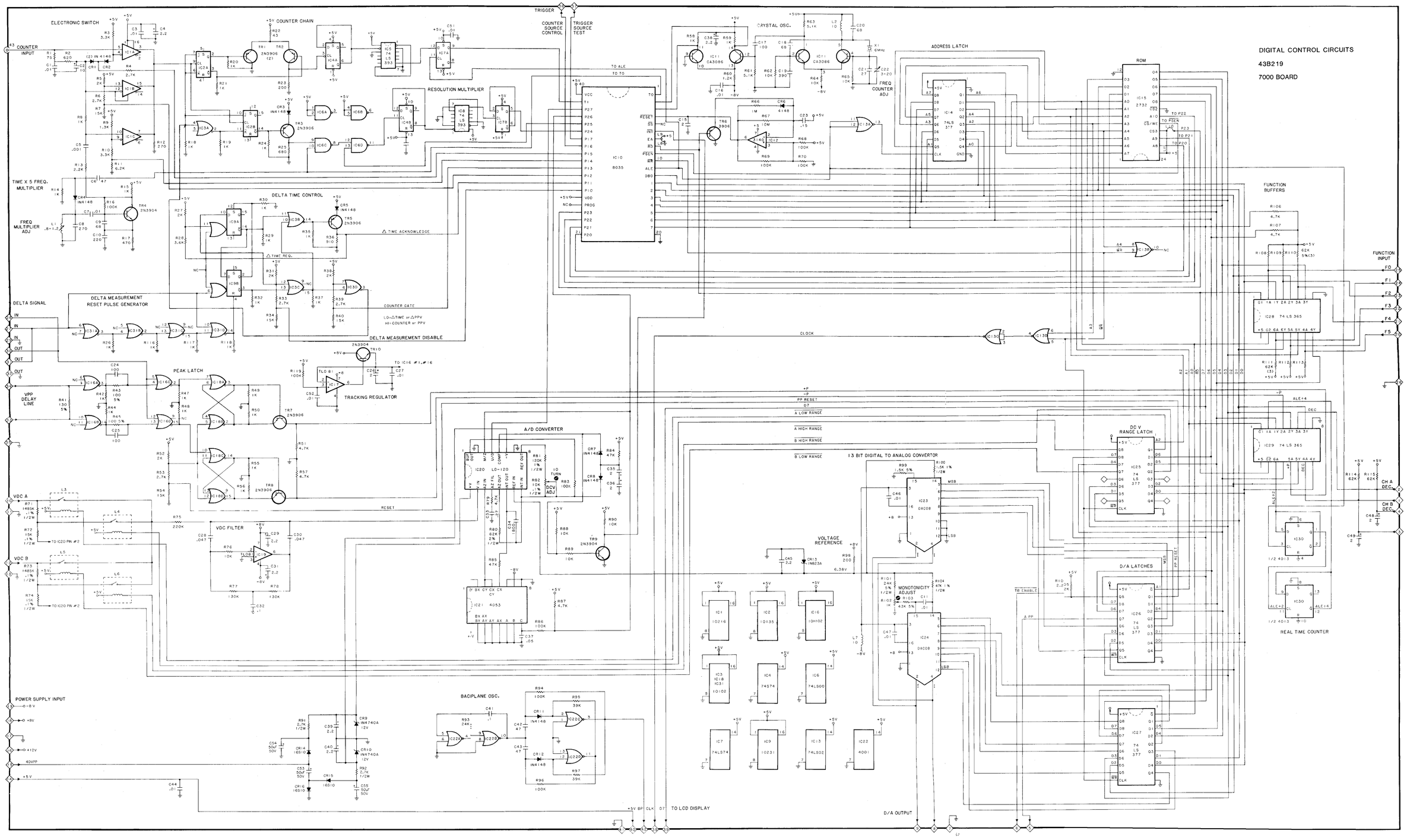

"7000" DIGITAL CONTROLLER BOARD SCHEMATIC

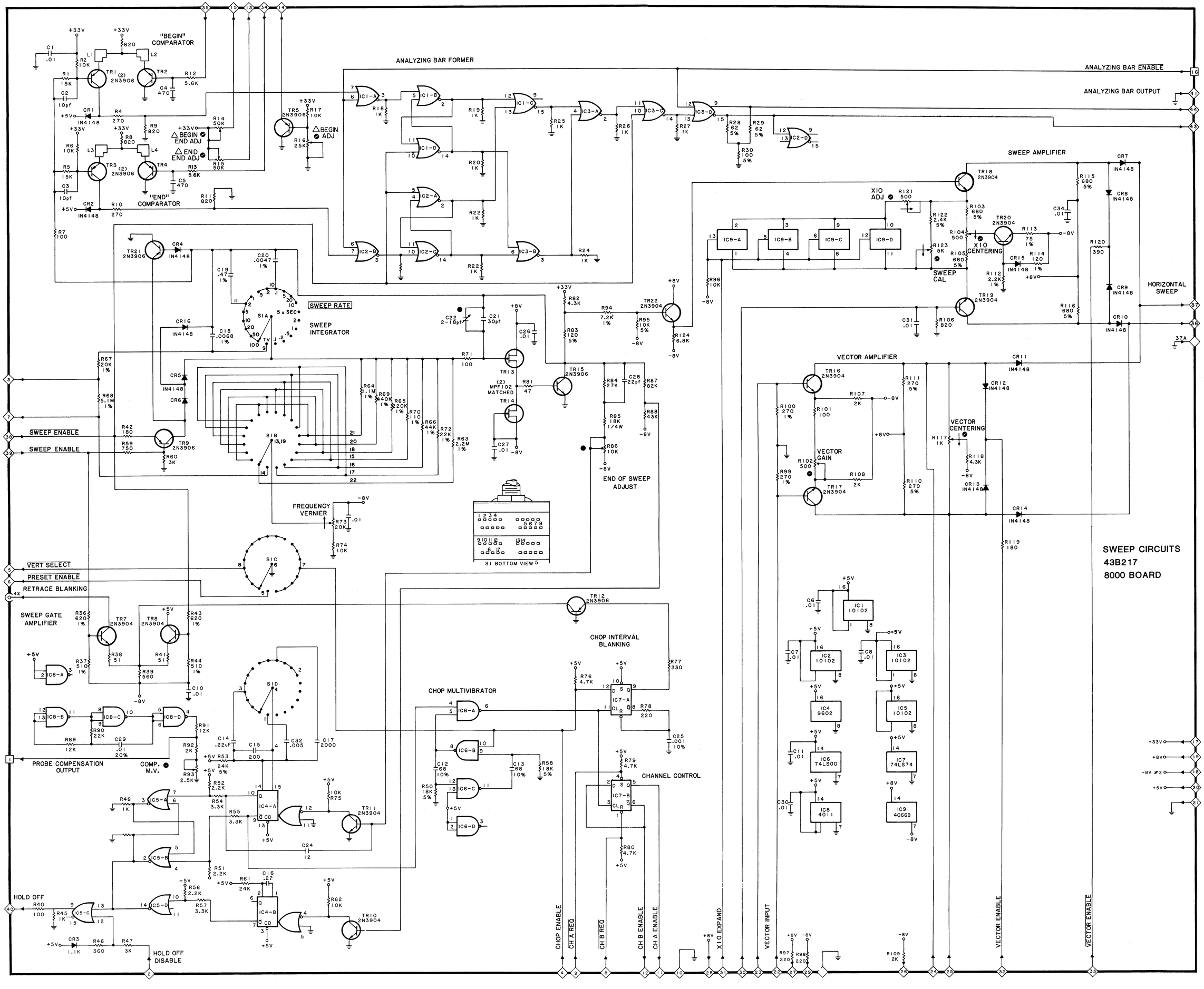

"8000" HORIZONTAL SWEEP BOARD SCHEMATIC

ManualsPlus.com

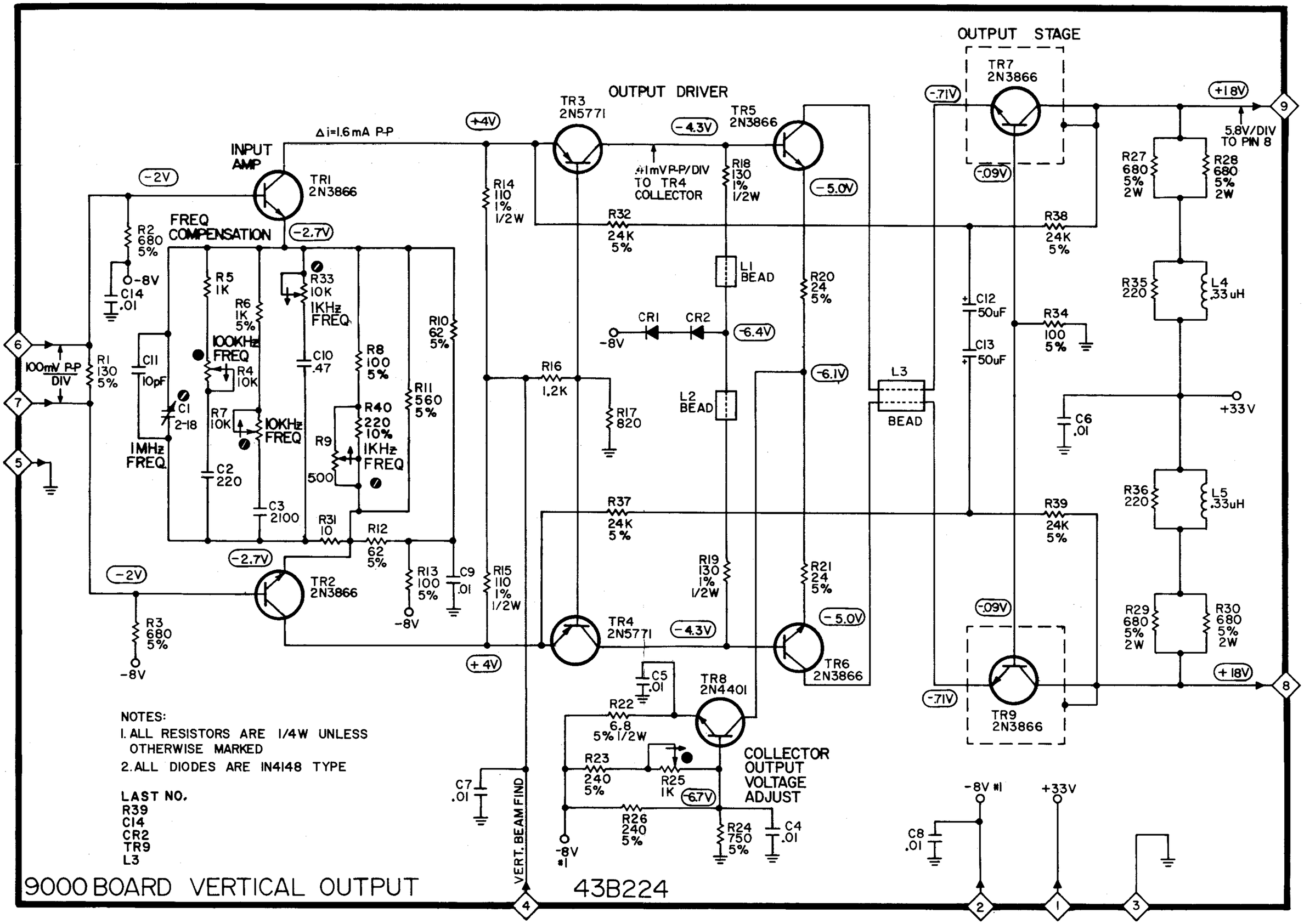

"9000" VERTICAL OUTPUT BOARD SCHEMATIC

ManualsPlus.com

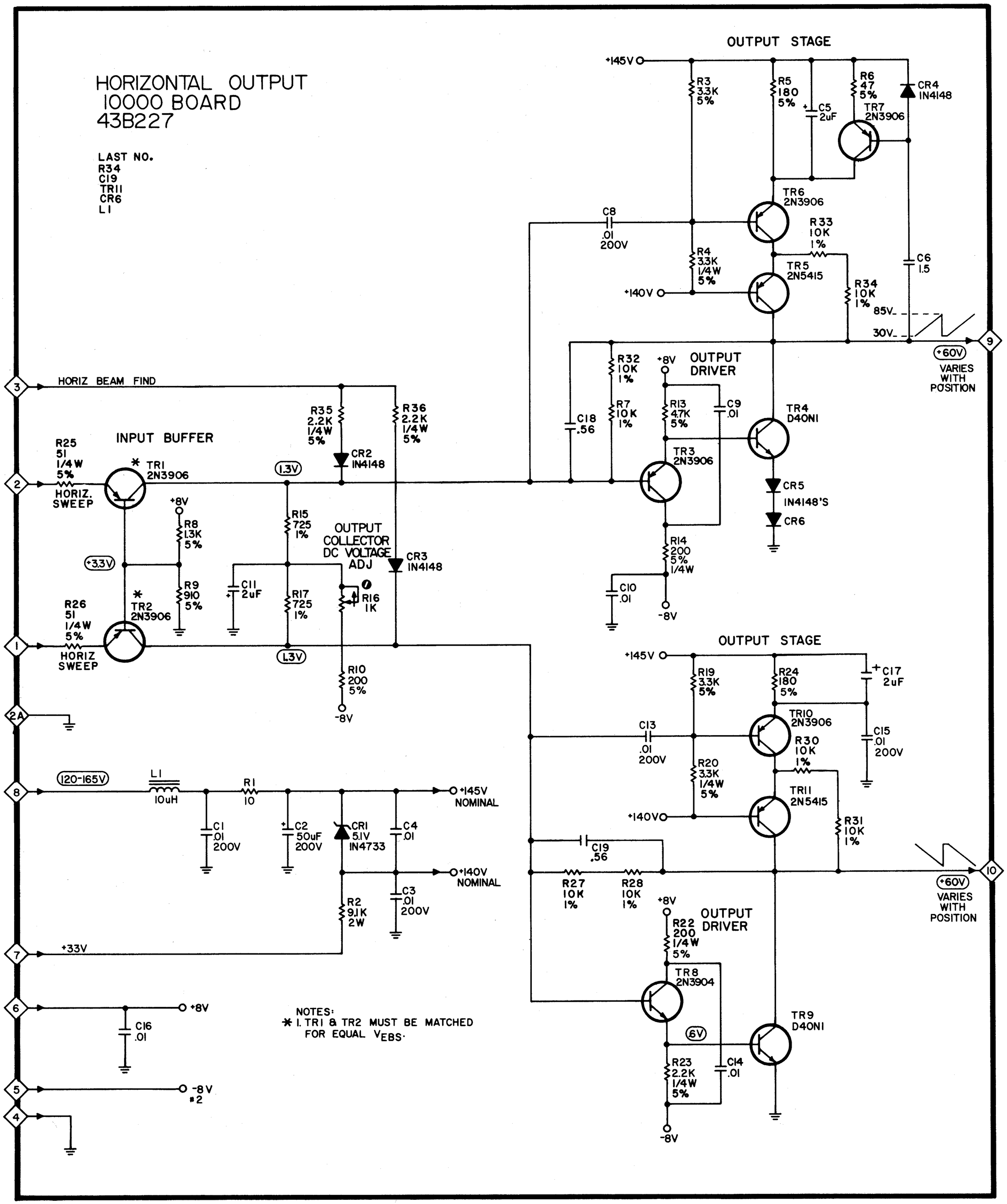

"10000" HORIZONTAL OUTPUT BOARD SCHEMATIC

ManualsPlus.com

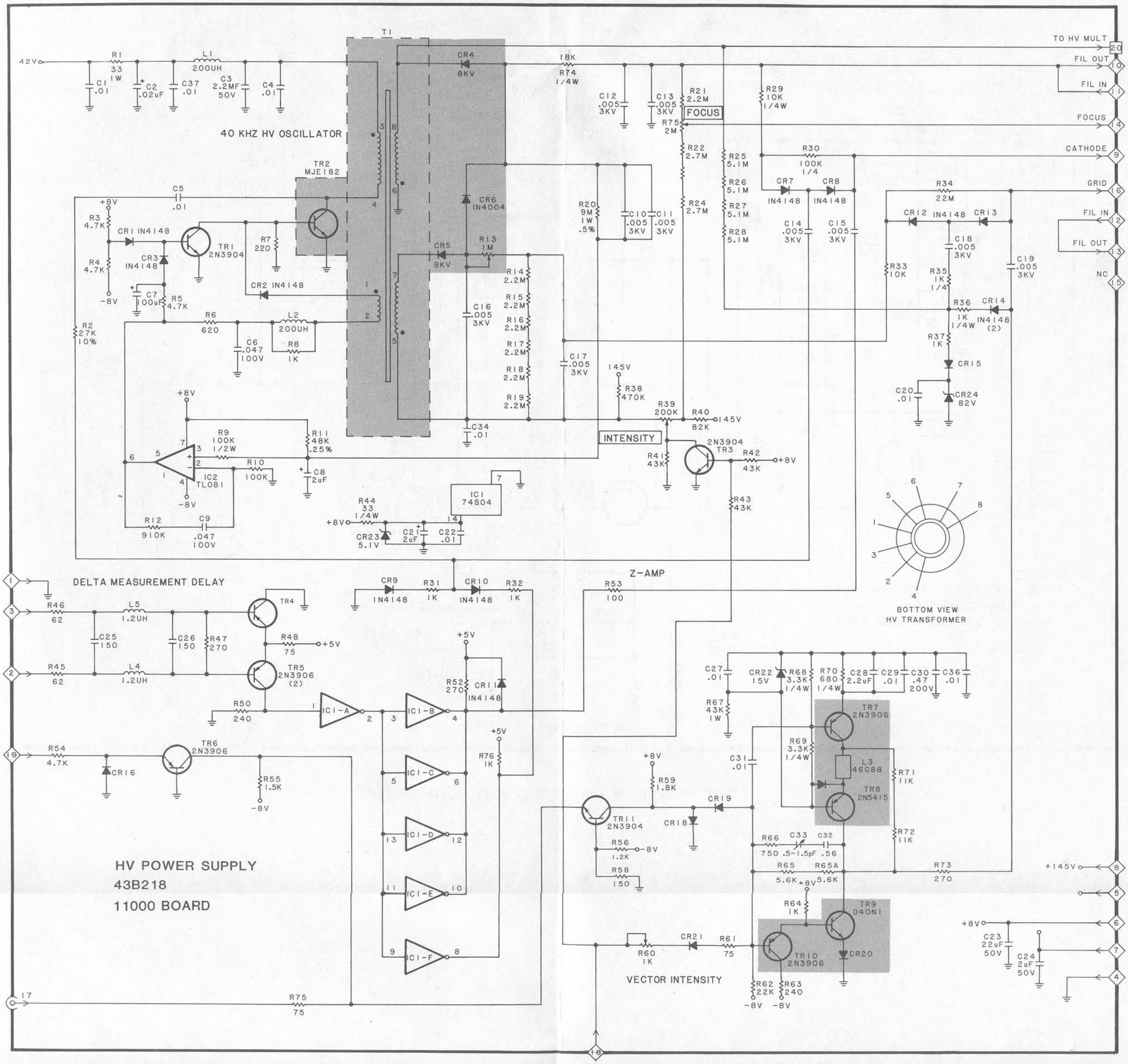

ManualsPlus.com

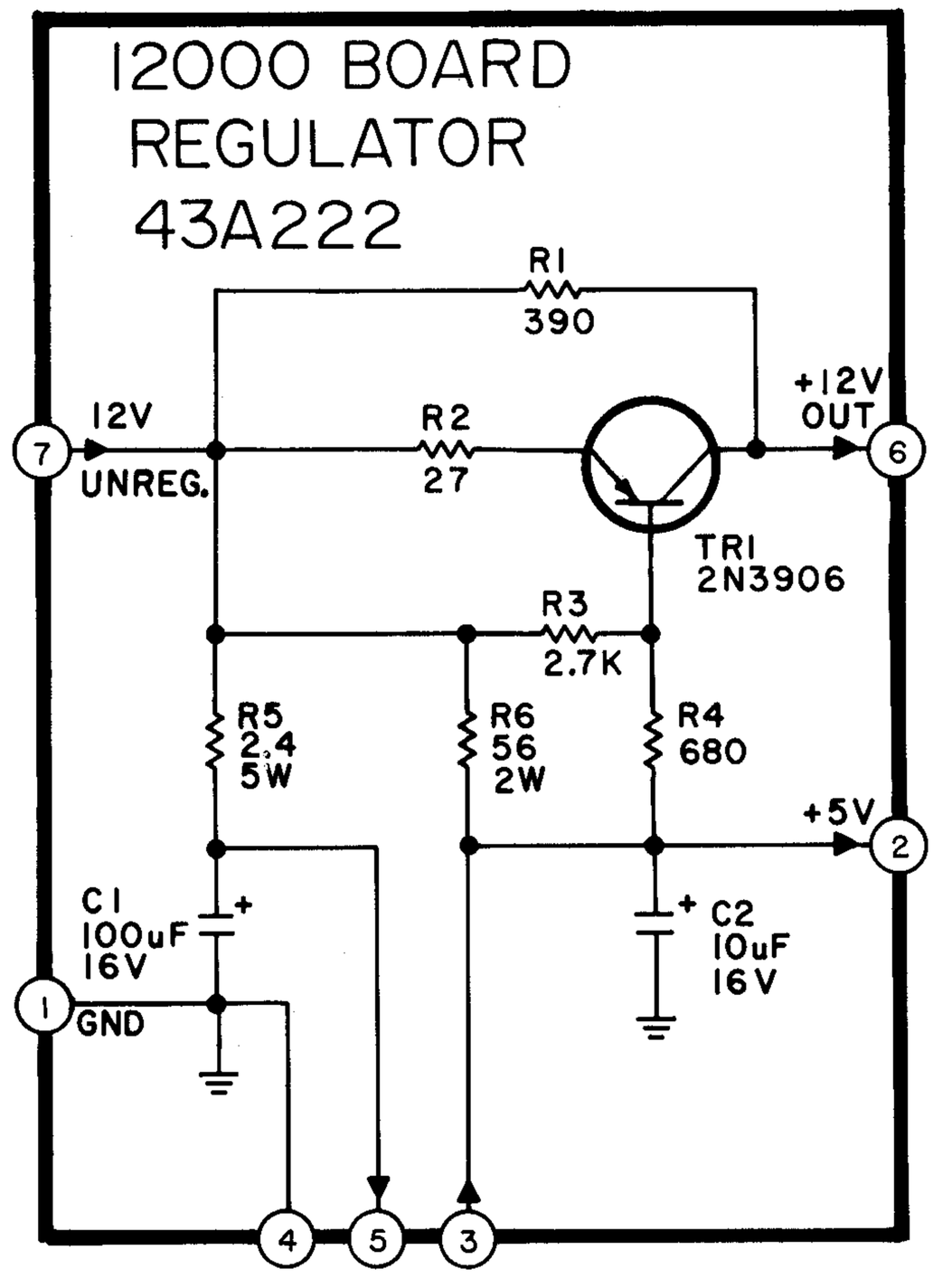

"12000" REGULATOR BOARD SCHEMATIC

ManualsPlus.com

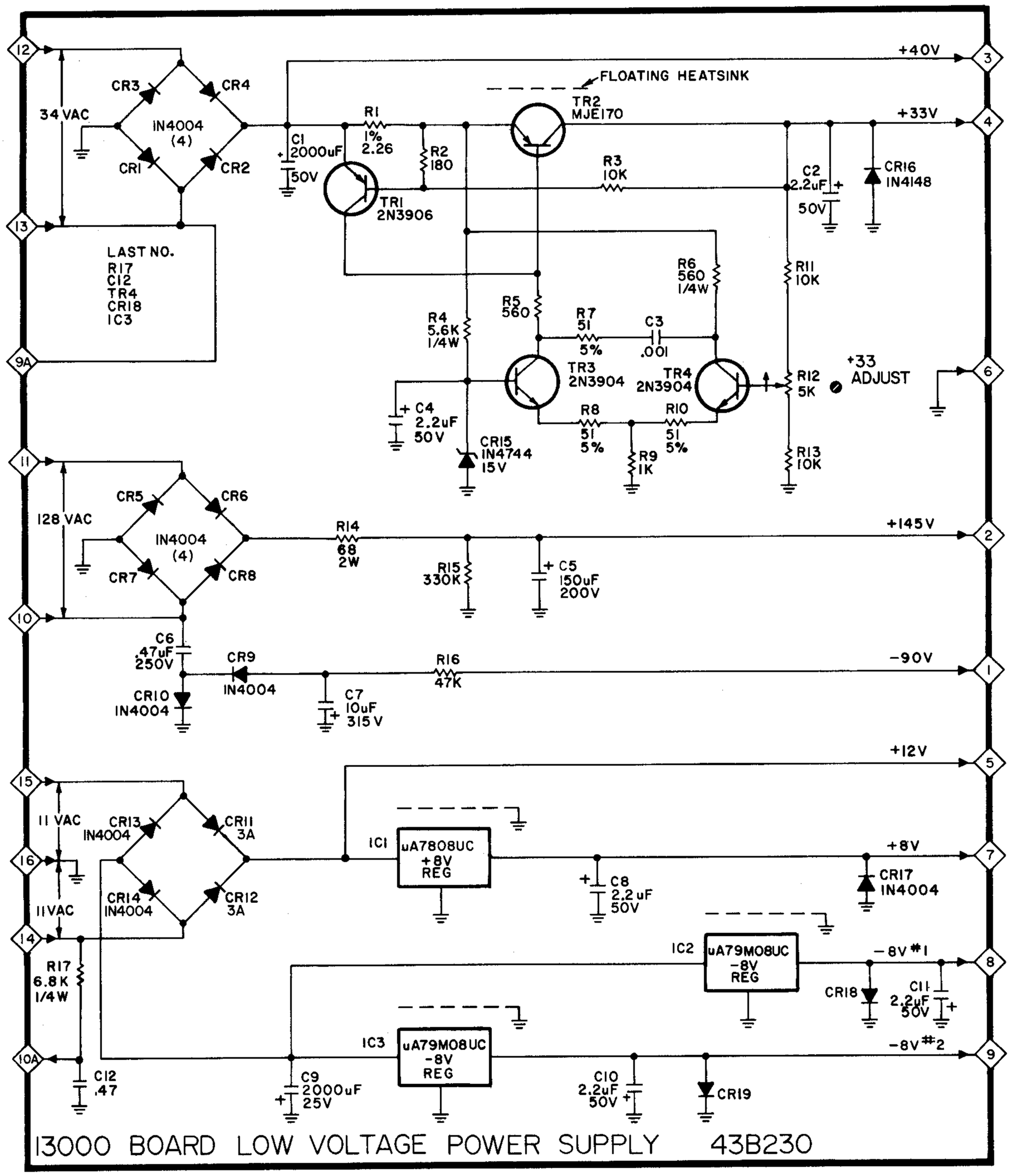

"13000" LOW VOLTAGE POWER SUPPLY BOARD SCHEMATIC

ManualsPlus.com

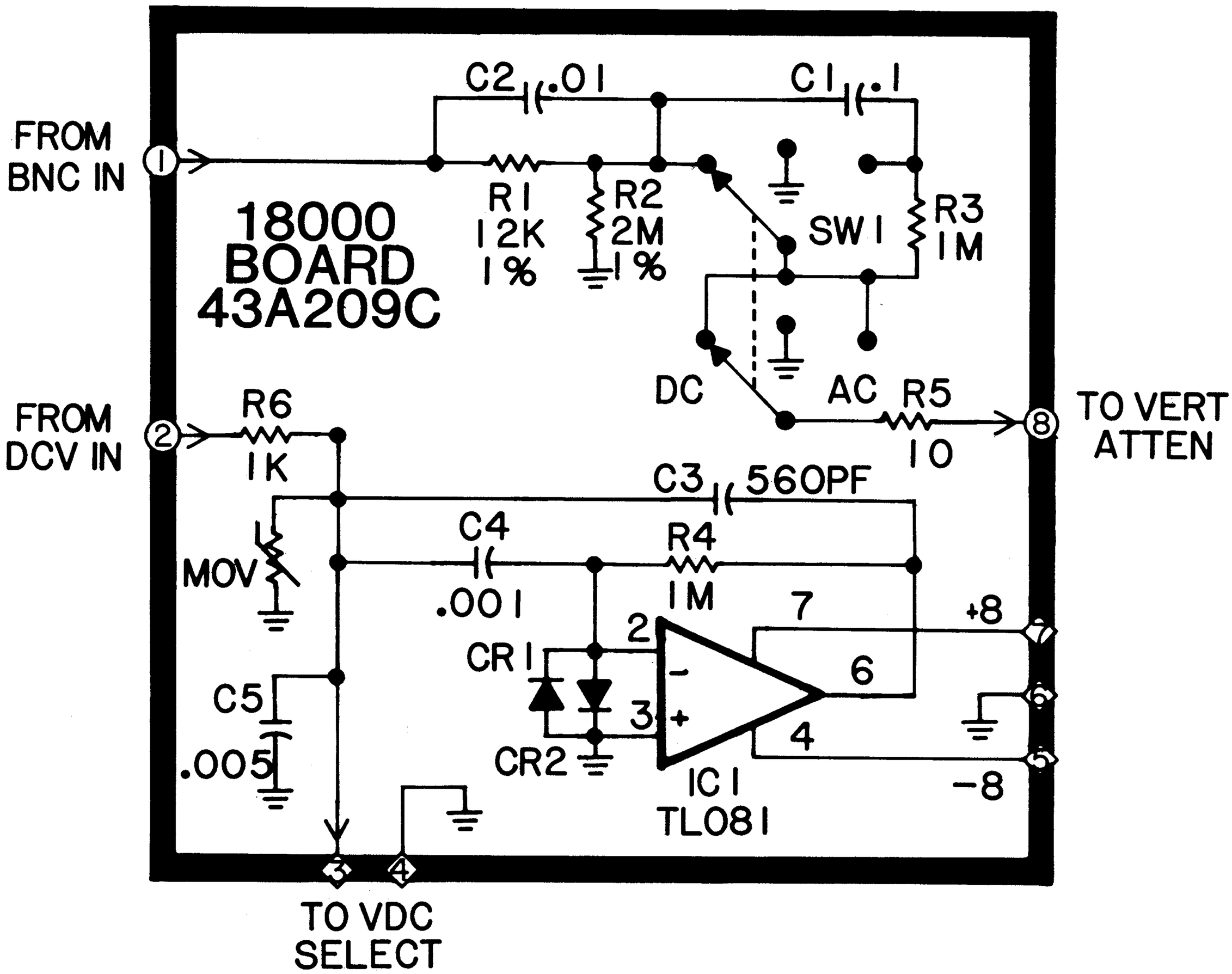

"18000" INPUT COUPLING BOARD SCHEMATIC