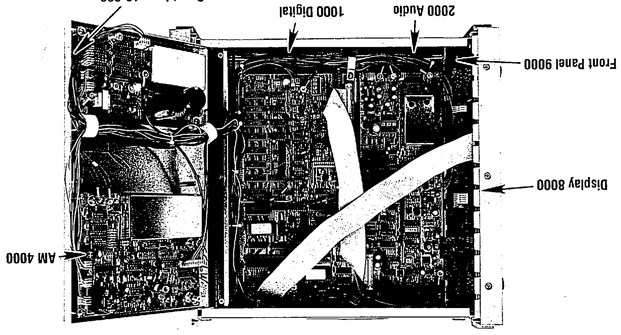

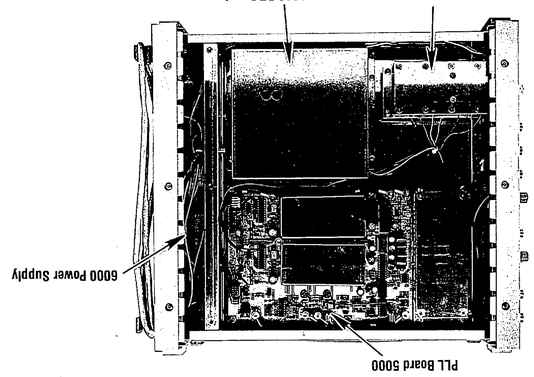

SG80

AM Stereo—FM Stereo Analyzer

Schematic & Parts List

AM 4000
Display 8000
Front Panel 9000
2000 Audio
1000 Digital
Countdown 10,000

PLL Board 5000
6000 Power Supply
Attn. 7000
3000 RF Board

Index

Board Number	See Sheet
1000	3
2000	4
3000	5
4000	5
5000	6
6000	7
7000	7
8000	8
9000	8
10,000	8

This sheet includes parts list.

SHEET 1

NOTES:

1. All resistances in ohms.
2. All capacitances greater than one are in pF, less than one in uF, unless otherwise indicated.
3. Board interconnection notes:
   - ☐ denotes a single push-on type connector.
   - ○ denotes wire soldered to PC board.
   - ◇ denotes molex connection. Numbers inside or along side indicate the pin number of the plug-in connector.
4. All controls jacks, and displays on exterior of unit are shown with box around the name. ☐

⚠WARNING

Avoid damage to parts caused by static electricity!

Most solid-state devices and film resistors are susceptible to damage due to discharge of static electricity. Observe the following precautions when a PC board is removed from the unit, or when handling components:

1. The person handling the part must be grounded through a 1 megohm resistor via a wrist strap or similar ground connection.
2. A PC board or component should never be placed on an insulated surface. The surface must be grounded (through a 1 megohm resistor) and conductive.
3. All replacement parts must be left in a completely enclosed, conductive container or package until ready for use. The person removing the part from the container must be properly grounded. All parts susceptible to static damage are shipped in conductive containers when ordered from the Sencore Service Department.

Components not listed are standard replacement parts and may be purchased locally. When ordering parts, please specify instrument model number, schematic reference, part number, and description. Please include remittance (check or money order) with your order, otherwise invoice will be shipped C.O.D. Minimum billing is $5.00

TOLL FREE 1-800-SENCORE
SENCORE *innovatively designed with your time in mind.*
3200 Sencore Drive
Sioux Falls, SD 57107
Call Collect 605-339-0100 In SD

Form 4197

Printed In U.S.A.

Digital Board (1000 BOARD)

SCHEMATIC REFERENCE	PART NO.	DESCRIPTION
C 3-5	24G447	Cap, Rlytic, 100 uF, 16 V, 10%
C 6-18	24G483	Cap, Mylar, .01 uF, 50V, 5%
C 21, 22	24G483	Cap, Mylar, .01 uF, 50 V, 5%
C 24, 86	24G482	Cap, Mylar, .1 uF, 50 V, 5%
C 26, 27	24G387	Cap, Trim, 2.5-18 pF
C 29-32, 34-43, 82-84, 97	24G382	Cap, Rlytic, 10 uF, 16 V, 20%
C 44, 45	24G86	Cap, Disc, 10 pF, 500 V, 10%, NPO
C 46-57	24G384	Cap, Lytic, 2.2 uF, 50 V, 20%
C 58-60	24G474	Cap, Trim, 5.1-50 pF, 250 V
C 61, 62	24G77	Cap, Disc, 20 pF, 500 V, 5%, NPO
C 63, 72, 73	24G368	Cap, Disc., .001 uF, 100 V, 10%
C 70, 71	24G485	Cap, Mylar, .047 uF, 50 V, 10%
C 74, 75	24G157	Cap, Disc. 25 pF, 500 V, 5%, NPO
C 76, 77	24G190	Cap, Disc, 180 pF, 500 V, 10%
C 79-81, 91	24G314	Cap, Disc. 15 pF, 500 V, 5%, NPO
C 88	24G53	Cap, Disc, 30 pF, 500 V, 5%, NPO
C 90	24G113	Cap, Disc, 270 pF, 500 V, 10%
C 92	24G183	Cap, Poly, .01 uF, 33 V, 5%
C 93, 94	24G450	Cap, Rlytic, 1 uF, 50 V, 20%
C 95	24G487	Cap, Mylar, .0022 uF, 50 V, 5%
CR 11, 12	50C3-2:A	Diode, Germ, 20 V, 1N695
CR 3-10, 13, 14	50C5-2:A	Diode, Sil, 75 V, 4148
IC 1	69G7-B	IC, Gate, Nor, QUAD, 4001B, CMOS
IC 2	69G266	IC, EPROM, 27C256/12.5 PRGMNG
IC 4	69G116	IC, Reg, -5V, 100 mA, 79L05
IC 6	69G70	IC, Reg, +5V, 500 mA, UA78M05UG
IC 7-14	69G302	IC, Flip-Flop, 74HC374, "D", Tri-S
IC 15, 16	69G298	IC, Converter, A/D, ADC0838
IC 17	69G42	IC, Counter, Decade, 74LS90
IC 18	69G322	IC, CMOS Micro, 80C31
IC 19	69G202	IC, F-Flop, "D", Octal, 74C373
IC 20	69G299	IC, RAM, 2 K X 8, HM6116
IC 22-31	69G303	IC, D/A, 8-Bit, Sel 1, DAC0802
IC 32, 33	69G208-B	IC, Gate, AND, QUAD, 4081
IC 34	69G61	IC, Gate, AND, QUAD, 74L208, TTL
IC 35	69G244	IC, CMOS, QUAD 2 In. NOR, 74HC02
IC 38, 39	69G80	IC, Op-AMp, Single, MOSFET, CA3140
IC 40	69G330	IC, Buffer, Pwr Amp, EL2003
IC 41	69G63	IC, Op-Amp, Single, Bifet, TL081
IC 43-45	69G91	IC, F-Flop, Octal "D", 74LS377, TTL
IC 46	69G179	IC, Decoder, 74HC138, CMOS
IC 47, 48	69G319	Up/Down Binary Counter
IC 49	69G203	IC, EPROM, 27C64
IC 51	69G64-B	IC, Switch, Triple, 4053B
IC 52, 57	69G189	IC, Op-Amp, Dual, Bifet, TL082
IC 54, 55	69G46	IC, Op-Amp, QUAD, Bifet, TL084
IC 56	69G195	IC, Reg, Adj, 1.5A , LM2931
IC 58	69G328	IC, Op-Amp, NE5534, Lo Noise
IC 59, 60	69G255	IC, Sinewave, VCO, XR2206
R 71	15C26-11	Pot, MVPC Cerm, 200 K, 1/2 W, 20%
R 72, 110	15C26-14	Pot, MVPC Cerm, 100 K, 1/2 W, 20%
R 93, 129	15A36-1	Pot, VPC20T Cerm, 1 K, 10%
R 94	15C26-15	Pot, MVPC Cerm, 1 K, 1/2 W, 20%
R 117, 118	15A34-1	Pot, VPC12T Cerm, 5 K, 1/2 W, 10%
R 126, 127	15C26-3	Pot, MVPC Cerm, 500, 1/2 W, 20%
R 131	15C26-26	Pot, MVPC Cerm, 25K, 1/2 W, 20%
R 136	15C26-7	Pot, MVPC Cerm, 10 K, 1/2 W, 20%
R 139	15A34-2	Pot, VPC12T Cerm, 10 K, 1/2 W, 10%
R 103, 104	14A38-2402A	Res, Met.F, 240, 1/4 W, 1%
R 112	14A38-4703A	Res, Met.F, 4.7 K, 1/4 W, 1%
R 114	14A38-5113A	Res, Met.F, 5.11 K, 1/4 W, 1%
R 115, 116	14A38-3304A	Res, Met.F, 33 K, 1/4 W, 1%
R 119	114A38-1693A	Res, Met.F, 1.69 K, 1/4 W, 1%
R 120	14A38-1693A	Res, Met.F, 1.69 K, 1/4 W, 1%
R 121, 122	14A38-2495A	Res, Met.F, 249 K, 1/4 W, 1%
R 123, 124	14A38-1654A	Res, Met.F, 16.5 K, 1/4 W, 1%
R 142	14A38-3923A	Res, Met.F, 3.92 K, 1/4 W, 1%
R 83-85	14A38-3743A	Res, Met.F, 3.74 K, 1/4 W, 1%
R 86, 87	14A38-3323A	Res, MET.F, 3.32 K, 1/4 W, 1%
R 95	14A38-7153A	Res, Met.F, 7.15 K, 1/4 W, 1%
R 98-101	14A38-9093A	Res, Met, F, 9.09 K, 1/4 W. 1%
TR 3-6, 8	19A33-1	Trans, NPN, 2N3904
TR 9	19A34-1	Trans, PNP, 2N3906
X 1	47A36	Crystal, Qtz, 10 MHz, .005%, 30 PPM
X 2	47A49	Crystal, 4.864 MHz

Audio Board (2000 BOARD)

SCHEMATIC REFERENCE	PART NO.	DESCRIPTION
C 3-19, 162	24G447	Cap, Rlytic, 100 uF, 16 V, 10%
C 30, 32	24G483	Cap, Mylar, .01 uF, 50 V, 5%
C 52-55	24G382	Cap, Rlytic, 10 uF, 16 V, 20%
C 72-74	24G86	Cap, Disc, 10 pF, 500 V, 10%, NPO
C 76	24G387	Cap, Trim, 2.5-18 pF
C 78-96	24G384	Cap, Lytic, 2.2 uF, 50 V, 20%
C 109, 110, 154	24G368	Cap, Disc, .001 uF, 100 V, 10%
C 113	24G407	Cap, Rlytic, 47 uF, 25 V, +50/-10%
C 114-117, 157, 158	24G52	Cap, Rlytic, 10 uF, 16 V, 20%
C 120, 121, 159	24G77	Cap, Disc, 20 pF, 500 V, 5%, NPO
C 126, 127, 163, 164	24G151	Cap, Disc, 22 pF, 500 V, 5%, NPO
C 129	24G49	Cap, Disc, 290 pF, 600 V, 10%
C 131	24G496	Cap, Mylar, .47 uF, 50 V, 10%
C 153	24G495	Cap, Rlytic, 220 uF, 25 V
C 155, 156	24G195	Cap, Mylar, .022 uF, 250 V, 10%
C 160	24G113	Cap, Disc, 270 pF, 500 V, 10%
C 165	24G557	Cap, Disc, 6800 pF, 50 V, 20%
CR 2-5	50C5-2:A	Diode, Sil, 75 V, 4148
FL 1-3	60B13	Filter, Low Pass, 15 kHz
IC 1, 2, 44-47, 93	69G331	IC, Quad Anlg Switch Arry, SD5001
IC 20	69G195	IC, Reg, Adj, 1.5A, LM2931
IC 32-42, 95, 96	69G328	IC, Op-Amp,NE5534, Lo Noise
IC 58-61, 103, 104	69G303	IC, D/A, 8-Bit, Sel 1, DAC0802
IC 71	69G58	IC, Comparator, LM311
IC 72	69G291	IC, Quad/Exc, Input, CD4070BC
IC 94	69G283	IC, Hi-Sp Inverter, 74HC04
IC 97	69G183	IC, Mux, CA4052
IC 98	69G29	IC, Reg, +5V, 100 mA, 78L05
IC 99	69G116	IC, Reg, -5V, 100 mA, 79L05
IC 101	69G189	IC, Op-Amp, Dual, Bifet, Tl082
IC 102	69G272	IC, Regulator, +8V, 7808B
L 1	46G161	Inductor, Adj, 1100 uH
L 2	46G16	Inductor, Adj, 4200 uH
L 3	46G159	Inductor, Adj, 1100 uH
L 4	46G9	Inductor, Axial, 10000 uH, 10%
L 5, 6	46G193	Inductor, Axial, 3600 pF, +/- 10%
R 41, 42	14A38-1004A	Res, Met.F, 10 K, 1/4 W, 1%
R 47, 279-282	14A38-1004A	Res, Met.F, 10 K, 1/4 W, 1%
R 69-74	14A38-1003A	Res, Met.F, 1 K, 1/4 W, 1%
R 90	14A38-4703A	Res, Met.F, 4.7 K, 1/4 W, 1%
R 123	15C26-5	Pot, MVPC Cerm, 2 K, 1/2 W, 20%
R 127	15C26-20	Pot, MVPC Cerm, 5K, 1/2 W, 20%
R 148	15C26-19	Pot, MVPC Cerm, 50 K, 1/2 W, 20%
R 160	15C26-13	Pot, MVPC Cerm, 200, 1/2 W, 20%
R 230, 231	15A36-2	Pot, VPC20T Cerm, 500, 10%
R 239, 240	14A38-3573A	Res, Met.F, 3.57 K, 1/4 W, 1%
R 241-245	14A38-2004A	Res, Met.F, 20K, 1/4 W, 1%
R 246	14A37-1984A	Res, Met.F, 19.4K, 1/4 W, .5%
R 249, 250	14A38-1214A	Res, Met.F, 12.1 K, 1/4 W, 1%
R 253	15C26-3	Pot, MVPC Cerm, 500, 1/2 W, 20%
R 256, 257	14A38-3013A	Res, Met.F, 3.01 K, 1/4 W, 1%
R 259, 260, 269-272	14A38-2213A	Res, Met.F, 2.21 K, 1/4W, 1%
R 261, 262	14A38-4704A	Res, Met.F, 47 K, 1/4 W, 1%
R 263	14A38-9533A	Res, Met.F, 9.53 K, 1/4 W, 1%
R 264, 264	14A38-9763A	Res, Met.F, 9.76 K, 1/4 W, 1%
R 273, 274, 283, 284	14A38-4993A	Res, Met.F, 4.99 K, 1/4 W, 1%
R 275-278, 285-288	14A38-3653A	Res, Met.F, 3.65 K, 1/4 W, 1%
TR 7-11	19A33-1	Trans, NPN, 2N3904
TR 15-17	19A34-1	Trans, PNP, 2N3906

RF Board (3000 BOARD)

SCHEMATIC REFERENCE	PART NO.	DESCRIPTION
C 1	24G384	Cap, Lytic, 2.2 uF, 50 V, 20%
C 2-4	24G483	Cap, Mylar, .01 uF, 50 V, 5%,
C 5-7	24G447	Cap, Rlytic, 100 uF, 16 V, 10%
C 8-12	24G368	Cap, Disc, .001 uF, 100 V, 10%
C 13, 14	24G400	Cap, Disc, 820 pF, 500 V, 10%,
C 15, 16	24G78	Cap, Poly, 330 pF, 500 V, 5%
C 17	24G152	Cap, Disc, 68 pF, 500 V, 10%, NPO
C 18	24G176	Cap, Disc, 47 pF, 500 V, 5%, NPO
C 19-22	24G70	Cap, Disc, 100 pF, 500 V, 5%, NPO
C 23	24G464	Cap, Disc, 120 pF, 500 V, 5% NPO
C 24-26	24G353	Cap, Disc, 220 pF, 50 V, 20%, NPO

SCHEMATIC REFERENCE	PART NO.	DESCRIPTION
C 27	24G208	Cap, Disc, 150 pF, 500 V, 10%,
C 28	24G499	Cap, Disc, .05 uF, 1 kV
C 29	24G256	Cap, Lytic, 20 uF, 400 V, +100/-0%
C 30-34	24G344	Cap, Poly, 47 pF, 160 V, 10%
C 35, 36	24G377	Cap, Poly, 30 pF, 630 V, 2.5%
CR 1-3, 5-10, 18, 19	50C5-2:A	Diode, Sil, 75 V, 4148
CR 11, 12	50G17	Diode, Hot, 50V, 10 mA, 501
CR 13-17	50G13-2	Diode, Pin, 110 V, 100mA, 5767
FL 1	33G304	Filter, Bandpass, 88-108 MHz
IC 1	69G29	IC, Reg, +5 V, 100 mA, 78L05
IC 6	69G189	IC, Op-Amp, Dual, Bifet, TL082
IC 7-9	69G235	IC, Microwave, 10 dB, MSA0304
IC 10	69G234	IC, Microwave, 12 dB, MSA0204
IC 12	69G195	IC, Reg, Adj, 1.5A, LM2931
IC 13	69G116	IC, Reg, -5V, 100 mA, 79L05
L 1-4	46G83	Inductor, Rad, .33 uH, 1000 mA, 10%
L 12	46G111	Inductor, Axial, 1 uH, 10%
L 18, 19	46G96	Inductor, Axial, 10 uH, 10%
L 5	46G99	Inductor, Rad, .68 uH, 1000 mA, 10%
L 6	46G103	Inductor, Axial, 100 uH, 84 mA, 10%
L 7, 8	46G169	Inductor, Axial, .18 uH, 10%
L 9, 10	46G168	Inductor, Axial, .22 uH, 10%
L 11	33G281	Mixer, SBL-1
L 13-16	41G18	Relay, Reed, 12 V, DPDT,
L 17	41G27	Relay, Reed, 12 V, DPST
R 21	15C26-15	Pot, MVPC Cerm, 1 K, 1/2 W, 20%
R 46	15C26-3	Pot, MVPC Cerm, 500, 1/2 W, 20%
TR 1-6	19A33-1	Trans, NPN, 2N3904
TR 7	19A34-1	Trans, PNP, 2N3906

AM Board (4000 BOARD)

SCHEMATIC REFERENCE	PART NO.	DESCRIPTION
C 1- 5, 8, 9, 91, 93	24G382	Cap, Rlytic, 10 uF, 16 V, 20%
C 7	24G382	Cap, Rlytic, 10 uF, 16 V, 20%
C 10- 23	24G483	Cap, Mylar, .01 uF, 50V, 5%
C 22, 57, 58, 87, 88	24G482	Cap, Mylar, .1 uF, 50 V, 5%
C 32-37, 80, 81	24G407	Cap, Rlytic, 47 uF, 25 V, +50/-10%
C 39-43	24G442	Cap, Rlytic, 100 uF, 16 V, +50/-10%
C 44-46	24G368	Cap, Disc, .001 uF, 100 V, 10%
C 47-49	24G384	Cap, Lytic, 2.2 uF, 50 V, 20%
C 50	24G314	Cap, Disc, 15 pF, 500 V, 5%, NPO
C 51-54	24G22	Cap, Disc, 330 pF, 1000 V, 10%
C 55	24G49	Cap, Disc, 390 pF, 600 V, 10%
C 62, 69	24G77	Cap, Disc, 20 pF, 500 V, 5%, NPO
C 65	24G75	Cap, Disc, 27 pF, 500 V, 5%, NPO
C 66	24G362	Cap, Trimmer, 2-10 pF, 100 V
C 67	24G353	Cap, Disc, 220 pF, 50 V, 20%, NPO
C 70	24G483	Cap, Mylar, .01 uF, 50 V, 5%
C 71, 72	24G368	Cap, Disc, .001 uF, 100 V, 10%

SCHEMATIC REFERENCE	PART NO.	DESCRIPTION
C 73	24G162	Cap, Disc, 62 pF, 500 V
C 74	24G349	Cap, Poly, 510 pF, 160 V, 5%
C 75	24G87	Cap, Mylar, .0022 uF, 50 V, 5%
C 76-79	24G231	Cap, Poly, 750 pF, 33 V, 5%
C 84, 85	24G83	Cap, Disc, 33 pF, 500 V
C 86	24G290	Cap, Disc, 39 pF, 500 V
C 89, 90	24G86	Cap, Disc, 10 pF, 500 V
CR 1	50C5-2:A	Diode, Sil, 75 V, 4148
CR 2	50C12-1	Diode, Zener, 6.2 V, 5%, 825
FL 1	33G270	Filter, 4.5 MHz Trap
FL 2	33G289	Filter, Bandpass, 5.5 MHz
IC 1-5	69G144	IC, Bal-Modltor, MC1496
IC 6	69G116	IC, Reg, -5V, 100 mA, 79L05
IC 7	69G263	IC, Prescaler, CA3232E
IC 8	69G130	IC, D/A, 8-Bit, DAC-0802
IC 9	69G46	IC, Op-Amp, Quad, Bifet, TL084
IC 10	69G29	IC, Reg, +5V, 100 mA, 78L05
IC 11	69G244	IC, CMOS, Quad 2 In Nor, 74HC02
IC 12	69G42	IC, Counter, Decade, 74LS90
IC 13	69G246	IC, CMOS, Flip-Flop, 74HC74
IC 14	69G195	IC, Reg, Adj, 1.5A, LM2931
IC 15	69G382	IC, High Speed Latch Comparator
L 1	46G103	Inductor, Axial, 100 uH, 10%
L 2	46G54	Inductor, Trimmer, 260 uH
L 3	46G9	Inductor, Axial, 10000 uH, 10%
L 7	46G119	Inductor, Axial, 15 uH, 10%
L 8, 9	46G96	Inductor, Axial, 10 uH, 10%
L 10, 11	46G140	Inductor, Axial, 1.5 uH, 10%
L 12	46G111	Inductor, Adj, 70 uH
L 13	46G198	Inductor, Adj, 1100 uH
L 14-17	46G195	Inductor, Axial, 68 uH
L 18-21	46G196	Inductor, Axial, 120 uH
L 22, 23	46G197	Inductor, Axial, 220 uH
R 58-60	15A34-2	Pot, 10 K
R 86	15C26-20	Pot, MVPC Cerm, 5 K, 1/2 W, 20%
R 110, 111	15A34-1	Pot, 5 K
R 1, 2	14A38-3923A	Res, Met.F, 3.92 K, 1/4 W, 1%
R 3, 4	14A38-2403A	Res, Met.F, 2.4 K, 1/4 W, 1%
R 5	14A38-2003A	Res, Met.F, 2 K, 1/4 W, 1%
R 6, 49	14A38-1603A	Res, Met.F, 1.6 K, 1/4 W, 1%
R 47, 48	14A38-4703A	Res, Met.F, 4.7K, 1/4 W, 1%
R 69	14A38-1003A	Res, Met.F, 1 K, 1/4 W, 1%
R 70, 71	14A38-1004A	Res, Met.F, 10 K, 1/4 W, 1%
R 75	14A38-4702A	Res, Met.F, 470 1/4 W, 1%
R 87	14A38-3653A	Res, Met.F, 3.65 K, 1/4 W, 1%
TR 1, 3, 4, 9, 10	19A33-1	Trans, NPN, 40 V, 2N3904
TR 5, 6, 8	19A34-1	Trans, PNP, 40 V, 2N3906
TR 7	19A44	Trans, NPN, 40 V, 2N4401

PLL Board (5000 BOARD)

SCHEMATIC REFERENCE	PART NO.	DESCRIPTION
C 1	24G464	Cap, Disc, 120 pF, 500 V, 5%, NPO
C 2	24G496	Cap, Mylar, .47 uF, 50 V, 10%
C 3	24G42	Cap, Disc., .005 uF, 500 V, +80/-20%
C 4, 23, 156	24G483	Cap, Mylar, .01 uF, 50 V, 5%
C 5, 6, 9, 11, 14, 16, 129, 131, 136, 150, 153, 157	24G368	Cap, Disc, .001 uF, 100 V, 10%
C 7	24G49	Cap, Disc, 3390 pF, 600 V, 10%
C 8, 27, 33, 40, 51, 58	24G77	Cap, Disc, 20 pF, 500 V, 5%, NPO
C 10, 12, 13, 15, 18, 19, 31, 32, 34, 52, 143, 149, 154, 161	24G482	Cap, Mylar, .1 uF, 50V, 5%
C 17, 142	24G410	Cap, Rlytic, 220 uF, 25 V, +50/-10%
C 20	24G474	Cap, Trim, 5.1-50 pF, 250 V
C 21	24G113	Cap, Disc, 270 pF, 500 V, 10%
C 22, 42, 59-62, 76, 87, 89, 97, 98, 110, 112, 122, 123, 158, 159	24G382	Cap, Rlytic, 10 uF, 16 V, 20%
C 24	24G75	Cap, Disc, 27 pF, 500 V, 5% NPO
C 25, 46	24G452	Cap, Disc, 8.2 pF, 100 V, 5%, NPO
C 28, 41, 44, 75	24G450	Cap, Rlytic, 1 uF, 50 V, 20%
C 29, 30, 43	24G317	Cap, Disc, 36 pF, 500 V, 5%, NPO
C 30, 35, 39, 53, 57, 160	24G82	Cap, Disc, 100 pF, 500 V, 20%, NPO
C 36, 38, 54, 56	25G290	Cap, Disc, 39 pF, 500 V, 10%, NPO
C 37, 55	24G71	Cap, Disc, 130 pF, 500 V, 10% NPO
C 45	24G324	Cap, Disc, 12 pF, 500 V, 5%, NPO
C 47-49	24G290	Cap, Disc, 39 pF, 500 V, 10%, NPO
C 50	24G482	Cap, Mylar, .1 uF, 50 V
C 63-68, 71-73, 88, 103, 111, 124, 130, 137-139, 141, 149	24G442	Cap, Rlytic, 100 uF, 16 V, +50/-10%
C 69, 70, 74	24G437	Cap, Rlytic, 470 uF, 25 V, +100/-20%
C 77-81, 90, 104, 113, 125	24G465	Cap, Chip, .01 uF, 50 V, 10%
C 82	24G439	Cap, Chip, 8.2 pF, 50 V, 10%
C 83, 107	24G507	Cap, Chip, 27 pF, 50 V, 10%, NPO
C 84, 95, 96, 99, 108, 119120144	24G438	Cap, Chip, 10 pF, 50 V, 10%, NPO
C 85, 92, 101, 115, 128	24G494	Cap, Chip, 100 pF, 50 V, 10%, NPO
C 86, 100, 109, 121	24G508	Cap, Chip, 36 pF, 50 V, 10%, NPO
C 93, 105, 116, 127, 134, 135155	24G419	Cap, Chip, .001 uF, 50 V, 20%
C 94	24G516	Cap, Chip, 30 pF, 50 V, 10%, NPO
C 106	24G521	Cap, Chip, 39 pF, 5%, 50 V, NPO
C 117	24G522	Cap, Chip, 25 pF, 5%, 50 V, NPO
C 118	24G515	Cap, Chip, 20 pF, 50 V, 10%, NPO
C 133	24G368	Cap, Disc, .001 uF, 100 V, 10%
CR 1-6, 9-11, 17, 21-28	50C5-2:A	Diode, Sil, 75 V, 4148
CR 12-16, 18-20	50G18	Diode, Vari, 30 V, 20 pF, 10%, MV209
IC 1	69G267	IC, Gate, Quad 2-Input, 74 HC00
IC 2	69G46	IC, Op-Amp, Quad, Bifet, TL084
IC 3, 11-14	69G63	IC, Op-Amp, Single, Bifet, TL081

SCHEMATIC REFERENCE	PART NO.	DESCRIPTION
IC 4	69G95	IC, Dig, TTL, Quad Nand, 74LS26
IC 5, 6, 15, 44	69G233	IC, Microwave, 19 dB, MSA0104
IC 7, 8, 27	69G345	IC, Prescaler, 200 MHz, Dual Mod
IC 9, 10, 28	69G224	IC, PLL, Dual, 145156
IC 16	69G234	IC, Microwave, 12 dB, MSA0204
IC 17, 35-38	69G195	IC, Reg., Adj., 1.5A, LM2931
IC 18	69G135	IC, Reg, +12 V, 500 mA, 78M12
IC 19, 23, 26	69G29	IC, Reg, +5V, 100 mA, 78L05
IC 20, 24, 25, 39-42	69G147	IC, Reg, +8 V, 100 mA, 78L08, TTL
IC 21, 22	69G116	IC, Reg, -5V, 100 mA, 69L05
IC 29, 30, 31, 32	69G312	IC, MSA0185, Wideband Amp
IC 33, 43, 45	69G235	IC, Microwave, 10 dB, MSA0304
IC 34	69G65-B	IC, Switch, 1x8, 4051B
IC 46	69G172	IC, Res, Net, 5X10K, 6 Pin
L 1, 3, 14, 16, 18, 20	46G119	Inductor, Axial, 15 uH, 10%
L 2	26G177	Inductor, Adj., .509 uH NOM
L 4, 5, 10, 11	46G163	Inductor, Wireform, 250 nH
L 6, 7, 12, 13	46A26:B	Inductor, Axial, .17 uH, 5%
L 8, 24	46G103	Inductor, Axial, 100 uH, 10%
L 9	46G171	Inductor, Adj., .322 uH (NOM)
L 15	46G172	Inductor, Adj, .986 uH (NOM)
L 17	46G173	Inductor, Adj., .086 uH (NOM)
L 19, 21	46G174	Inductor, Adj, .0595 uH (NOM)
L 23	41G18	Relay, Reed, 12 V, DPDT
R 146	15C26-10	Pot, MVPC Cerm, 20 K, 1/2 W, 20%
R 19	15C26-24	Pot, MHPC Cerm, 10 K, 1/2 W, 20%
R 42, 48	15A36-1	Pot, VPC 20T Cerm., 1 K, 10%
R 45	15C26-15	Pot, MVPC Cerm, 1 K, 1/2 W, 20%
R 59	15C26-20	Pot, MVPC Cerm, 5 K, 1/2 W, 20%
R 30, 81	14G93-162	Res, Chip, 1.6K, 1/8 W, 5%
R 43	14A38-5113A	Res, Met.F, 5.11 K, 1/4 W, 1%
R 78	14G93-201	Res, Chip, 200, 1/8 W, 5%
R 79	14G93-821	Res, Chip, 820 0hm, 1/8 W, 5%
R 82, 90, 98, 106, 113	14G93-102	Res, Chip, 1 K, 1/8 W, 5%
R 83, 91, 99, 107	14G93-333	Res, Chip, 33 K, 1/8 W, 5%
R 84, 92, 100, 108	14G93-183	Res, Chip, 18 K, 1/8 W, 5%
R 85, 87	14G93-272	Res, Chip, 2.7 K, 1/8 W, 5%
R 86, 95, 101, 109	14G93-101	Res, Chip, 100, 1/8 W, 5%
R 89, 97, 104, 112	14G93-271	Res, Chip, 270 Ohm, 1/8 W, 5%
R 93, 103, 111	14G93-331	Res, Chip, 330, 1/8 W, 5%
R 96, 102, 110	14G93-152	Res, Chip, 1.5 K, 1/8 W, 5%
T 1, 2	28A99	Transform, RF, Small Core Balun
TR 1, 2, 7-10	19G73	Trans, NPN, MRF904
TR 3, 5	19A33-1	Trans, NPN, 2N3904
TR 4	19A34-1	Trans, PNP, 2N3906
TR 11	19G70	Trans, N-Chnl, 2N700

Power Supply Board (6000 BOARD)

SCHEMATIC REFERENCE	PART NO.	DESCRIPTION
T 1	28A112:C	Transformer, Power, SG80
C 2-9	24G424	Cap, Rlytic, 2200 uF, 25 V, +30/-10%
C 10, 11	24G556	Cap, Lytic, 10000 uF, 35 V

SCHEMATIC REFERENCE	PART NO.	DESCRIPTION
CR 1-10	16G10	Diode, Sil, 400 V, 1 A, 1N4004
IC 1	69658	IC, Comp, LM311
L 1-5	46G92	Inductor, Wireform, 50 uH, 1.5 A

Attenuator Board (7000 BOARD)

SCHEMATIC REFERENCE	PART NO.	DESCRIPTION
	24A254-2:A	Cap, FThru, .001 uF, 500 V, 20%
C 1	24G499	Cap, Disc, .05 uF, 1 kV
CR 1-5	50C5-2:A	Diode, Sil, 75 V, 4148
L 1-5	41G18	Relay, Reed, 12 V, DPDT
R 1-10	14G96-6191	Res, Chip, Melf, 60.9 Ohm, 1/4 W, 1%
R 11-15	14G96-1541	Res, Chip, Melf, 15.5 Ohm, 1/4 W, 1%

Display Board (8000 BOARD)

SCHEMATIC REFERENCE	PART NO.	DESCRIPTION
C 1	24G483	Cap, Mylar., .01 uF, 50V, 5%
D 1, 2	23A88	LCD, 4 1/2 Digits, .1%
IC 1, 2	69G92	IC, LCD, Driver, 4332, CMOS
IC 3	69G3-B	IC, Gate, Nand, Quad, 4011B, CMOS
L 1-8	20G33	Lamp, Incand, 12 V @ 55 mA

Front Panel (9000 BOARD)

SCHEMATIC REFERENCE	PART NO.	DESCRIPTION
C 1, 2	24G382	Cap, Rlytic, 10 uF, 16V, 20%
CR 1, 4-6	20G14	Lamp, LED, 2V, 10 mA, MV5054-1
CR 2, 3	50C5-2:A	Diode, Sil, 75V, 4148
IC 1	69G29	IC, Reg, +5V, 78L05
R 11, 13, 14	15B38	Pot, Vernier
R 16, 30	15A27-3	Pot, MHPC Plst, 1 K, 1/3 W, 20%
R 34, 45	15C26-18	Pot, MVPC Cerm, 2K, 1/2 W, 20%
SW 1, 2, 6, 7	25G358	Switch, rotary, 1 pole; 12 pos.
SW 3, 4	25G405	Switch, Pushbutton, 2 station
SW 5	25G404	Switch, Pushbutton, 1 station

Countdown Board (10,000 BOARD)

SCHEMATIC REFERENCE	PART NO.	DESCRIPTION
C 1-8, 41	24G384	Cap, Lytic, 2.2 uF, 50 V, 20%
C 9-11, 15-19, 38, 39	24G483	Cap, Mylar, .01 uF, 50 V, 5%
C 20	24G195	Cap, Mylar, .022 uF, 250 V, 10%
C 21-23	24G382	Cap, Rlytic, 10 uF, 16 V, 20%
C 24, 25	24G487	Cap, Mylar, .0022 uF, 50 V, 5%
C 26, 29	24G447	Cap, Rlytic, 100 uF, 16 V, 10%
C 31, 32	24G496	Cap, Mylar, .47 uF, 50 V, 10%
C 36, 37	24G422	Cap, Rlytic, 100 uF, 100 V, +30/-10%
C 40	24G387	Cap, Trim, 2.5-18 pF
CR 1, 2, 4, 5	50C5-2:A	Diode, Sil, 75 V, 4148
CR 6	50G27	Diode, Vari-Cap, MVAM109
I 1, 2, 35	20G22	Lamp, Incand, 12 V, 30 mA
IC 1	69G267	IC, Gate, Quad 2 Input, 74HCD0

SCHEMATIC REFERENCE	PART NO.	DESCRIPTION
IC 2	69G224	IC, PLL, Dual, 145156
IC 3-6, 8	69G42	IC, Counter, Decade, 74LS90
IC 9	69G116	IC, Reg, -5V, 100 mA, 79L05
IC 10, 18	69G29	IC, Reg, +5V, 100 mA, 78L05
IC 13	69G328	IC, Op-Amp, NE5534, Lo Noise
IC 15	69G330	IC, Buffer, Pwr Amp, EL2003
IC 16	69G348	IC, Switched Capacitor Filter
IC 17	69G163	IC, Counter, 4 Bit, 74LS93
L 1	46G175	Inductor, Adj, 172 uH Nominal
R 57	15C26-24	Pot, MHPC Cerm, 10 K, 1/2 W, 20%
RT 1	33G262	MOV, 47 V, 10%
RT 3, 4	33G285	Thermistor, 100 Ohm, @ 25 Deg.C.
T 1	28A113	Transformer, 1:1, Lo Noise
TR 3	19A33-1	Trans, NPN, 2N3904
TR 4	19A34-1	Trans, PNP, 2N3906

Chassis Mounted Components

SCHEMATIC REFERENCE	PART NO.	DESCRIPTION
	25G403	Switch, Lighted Rocker, Gray
	44G20	Fuse, Slo-Blo 3AG, 1 Amp, 250 V
	8B387	Escutcheon, Front panel
	8B388	Escutcheon, Rear Panel
	256406	Rotary, Tuning, Push- Push

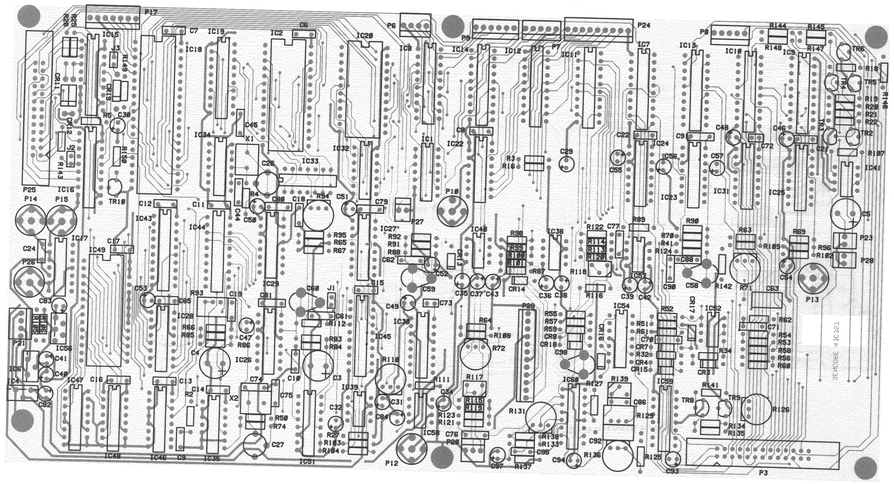

"1000" DIGITAL BOARD (Component View)

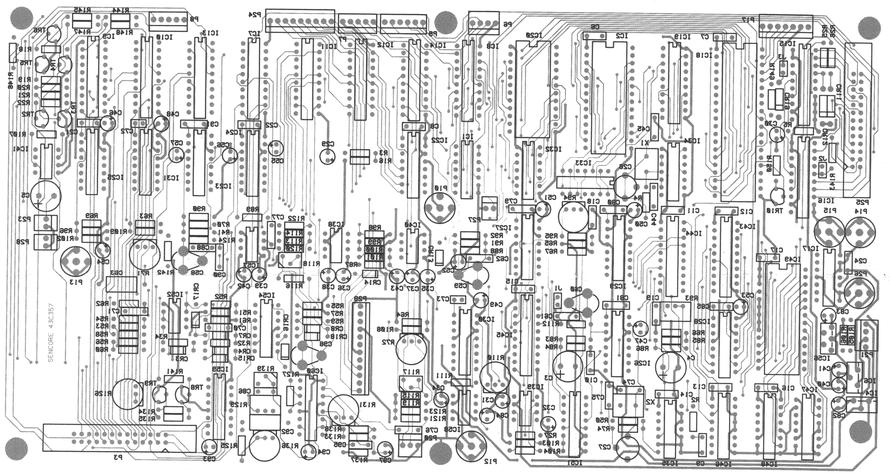

"1000" DIGITAL BOARD (Foil View)

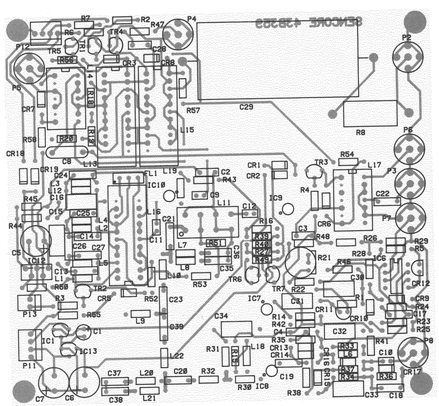

"3000" RF BOARD (Component View)

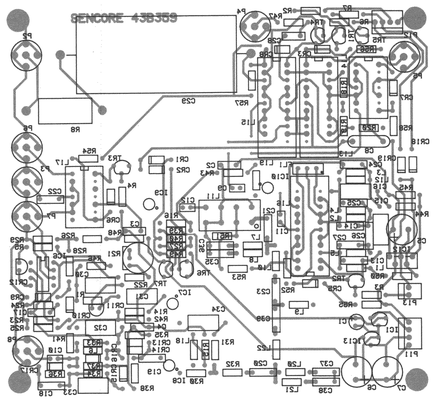

"3000" RF BOARD (Foil View)

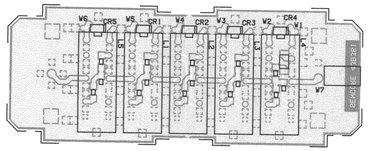

"7000" ATTENUATOR BOARD (Component View)

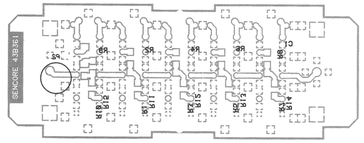

"7000" ATTENUATOR BOARD (Foil View)

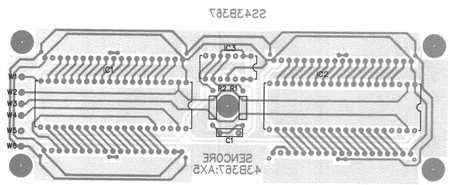

"8000" DISPLAY BOARD (Component View)

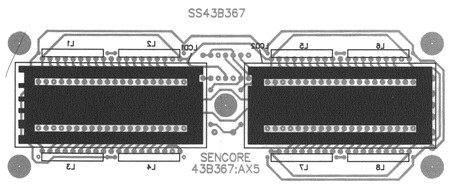

"8000" DISPLAY BOARD (Foil View)

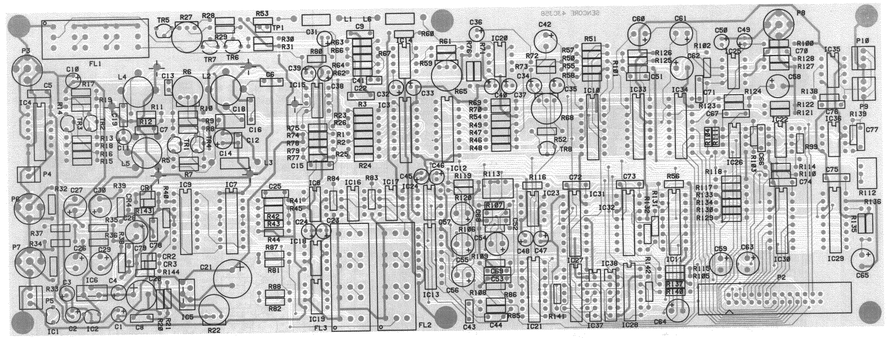

"2000" AUDIO BOARD (Component View)

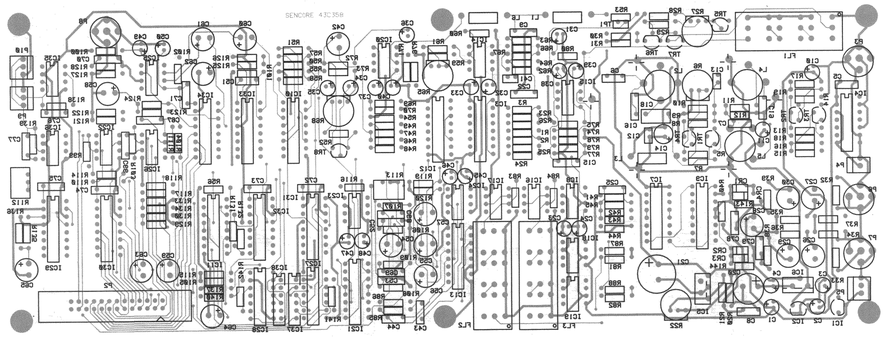

"2000" AUDIO BOARD (Foil View)

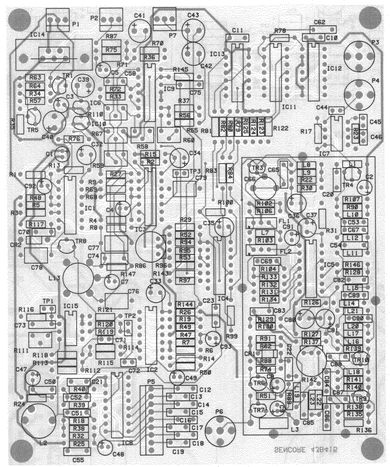

"4000" AM BOARD (Component View)

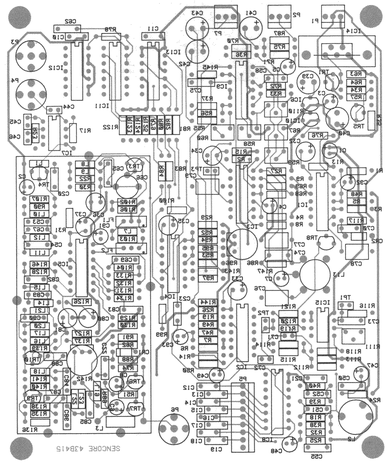

"4000" AM BOARD (Foil View)

This sheet includes PC board layouts.

SHEET 2

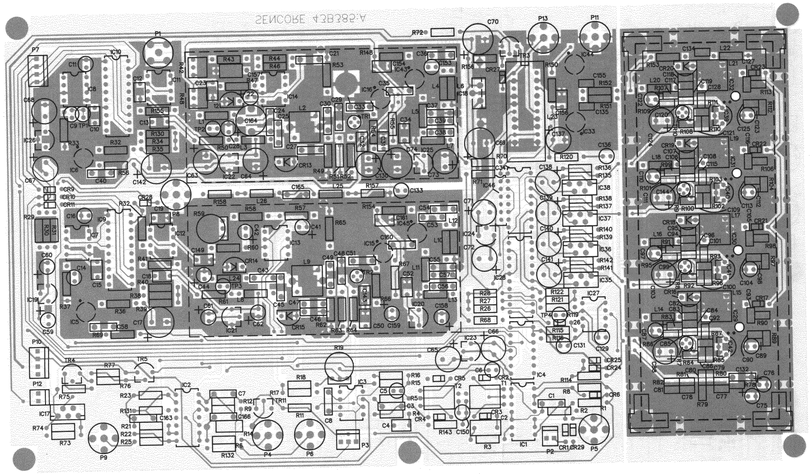

"5000" PLL BOARD (Component View)

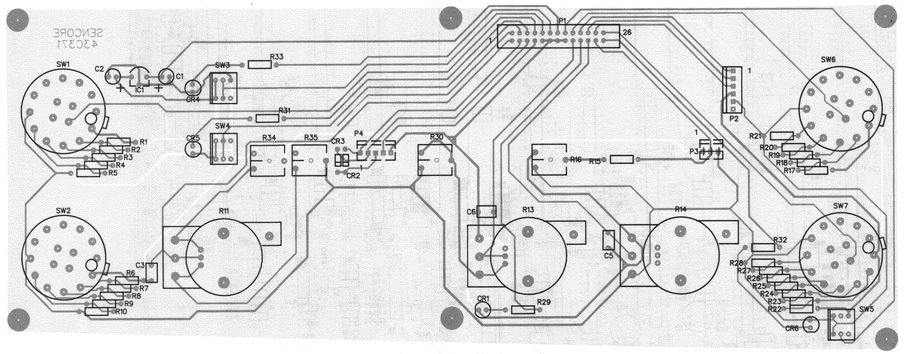

"9000" FRONT PANEL BOARD (Component View)

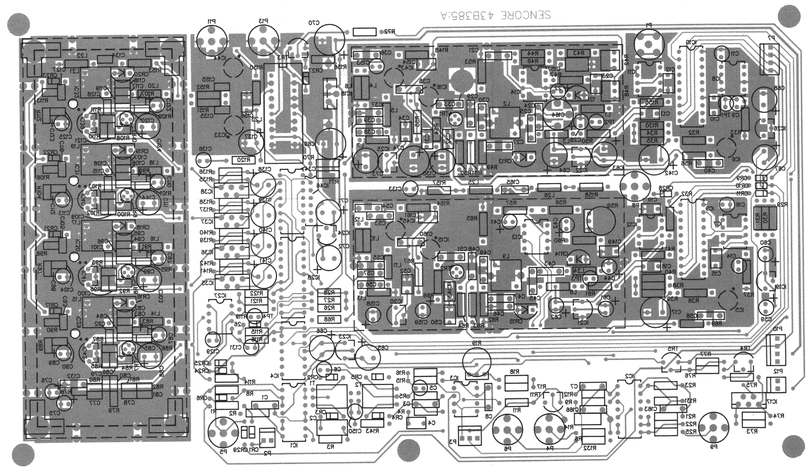

"5000" PLL BOARD (Foil View)

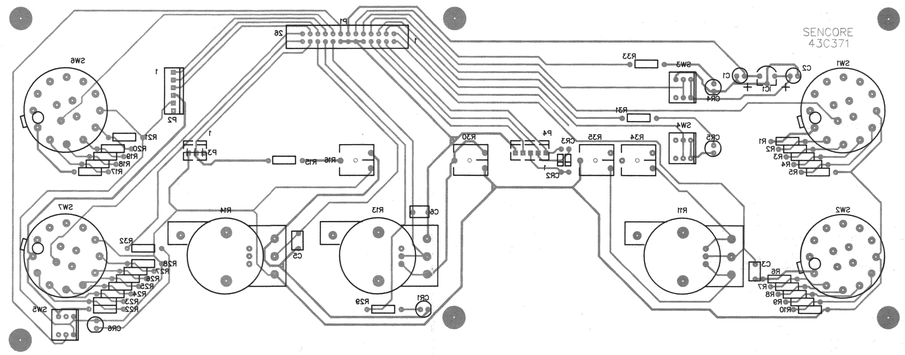

"9000" FRONT PANEL BOARD (Foil View)

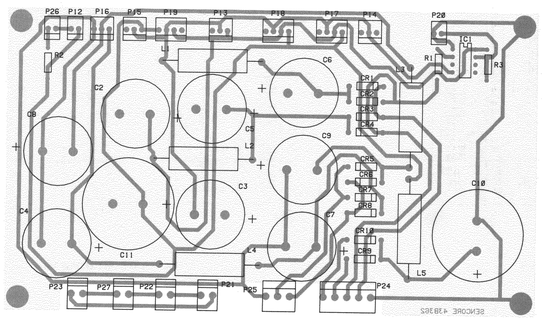

"6000" POWER SUPPLY BOARD (Component View)

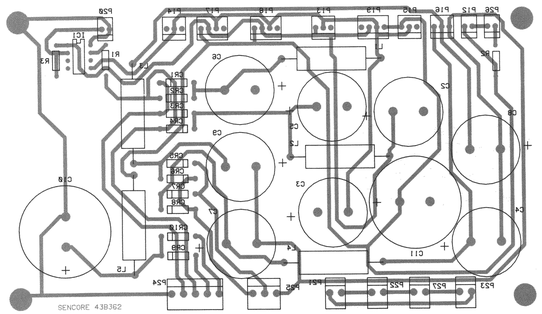

"6000" POWER SUPPLY BOARD (Foil View)

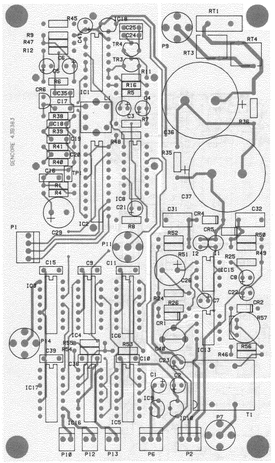

"10,000" COUNTDOWN BOARD (Component View)

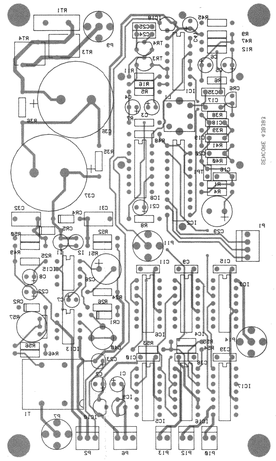

"10,000" COUNTDOWN BOARD (Foil View)

SWITCH BOARD (Component View)

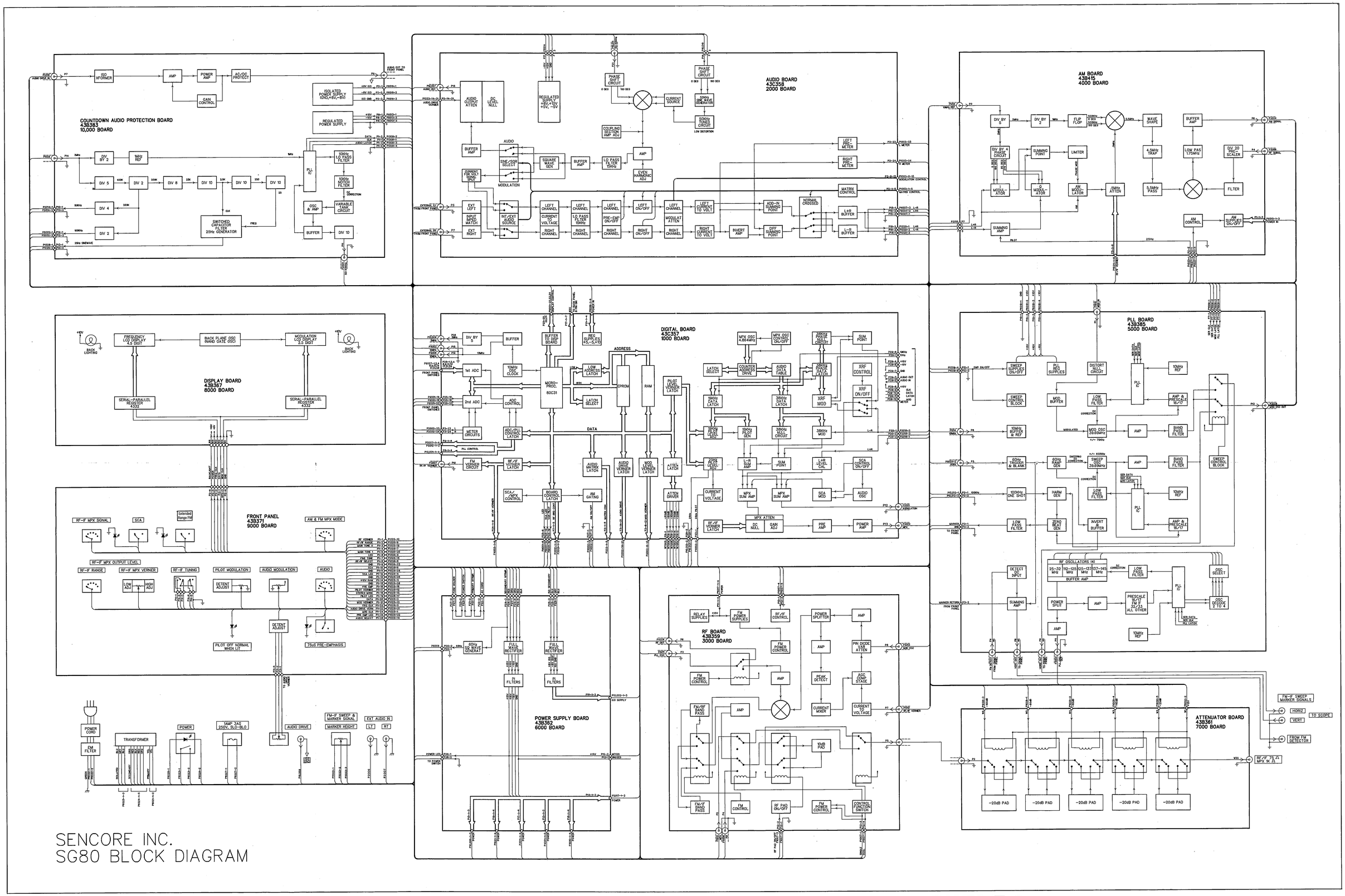

SENCORE INC.
SG80 BLOCK DIAGRAM

This sheet included Block Diagram, board numbers 1000

SHEET 3

"1000" DIGITAL BOARD
PART 1 OF 2

"1000 DIGITAL BOARD
PART 2 OF 2

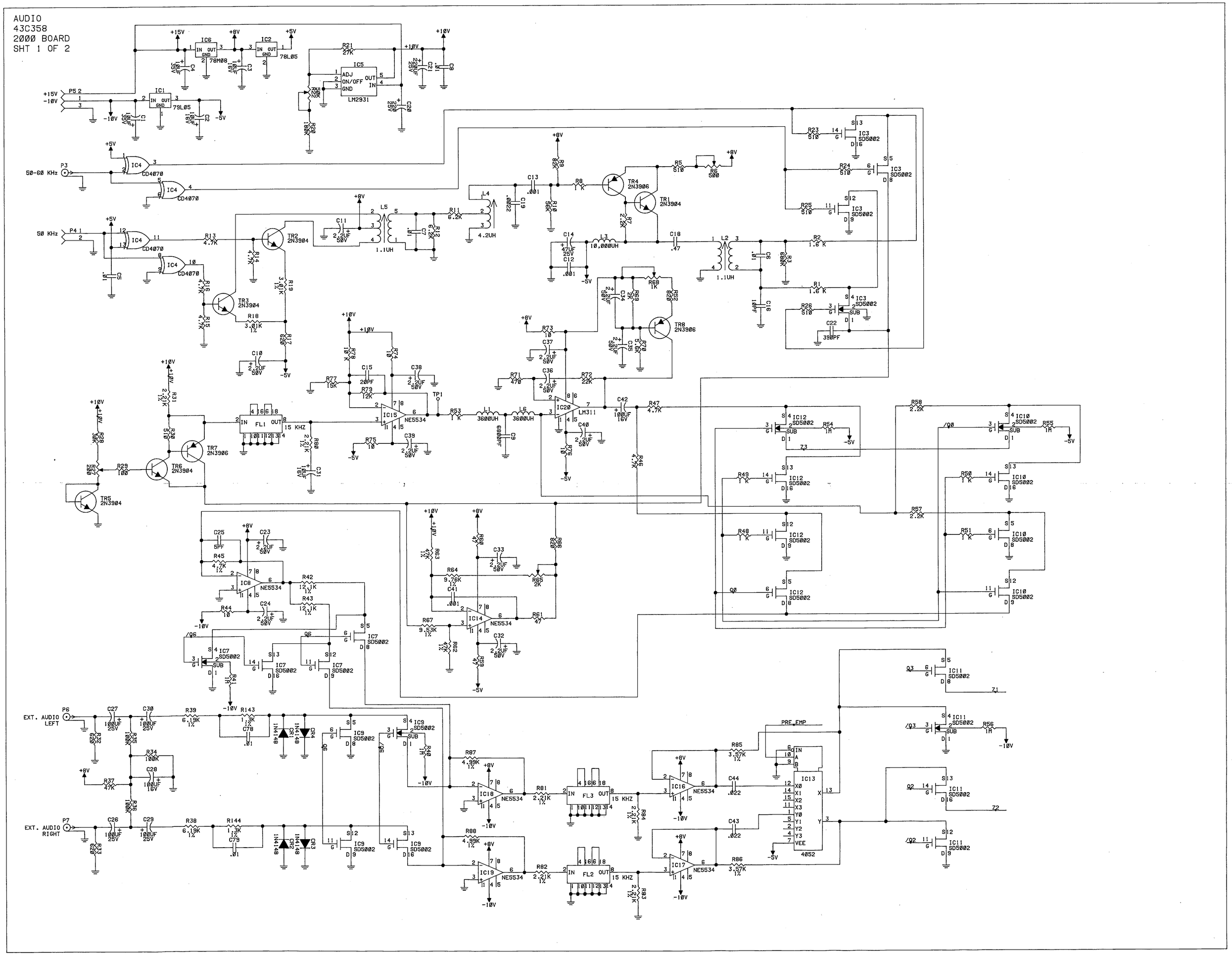

"2000" AUDIO BOARD
PART 1 OF 2

This sheet includes board numbers 2000

SHEET 4

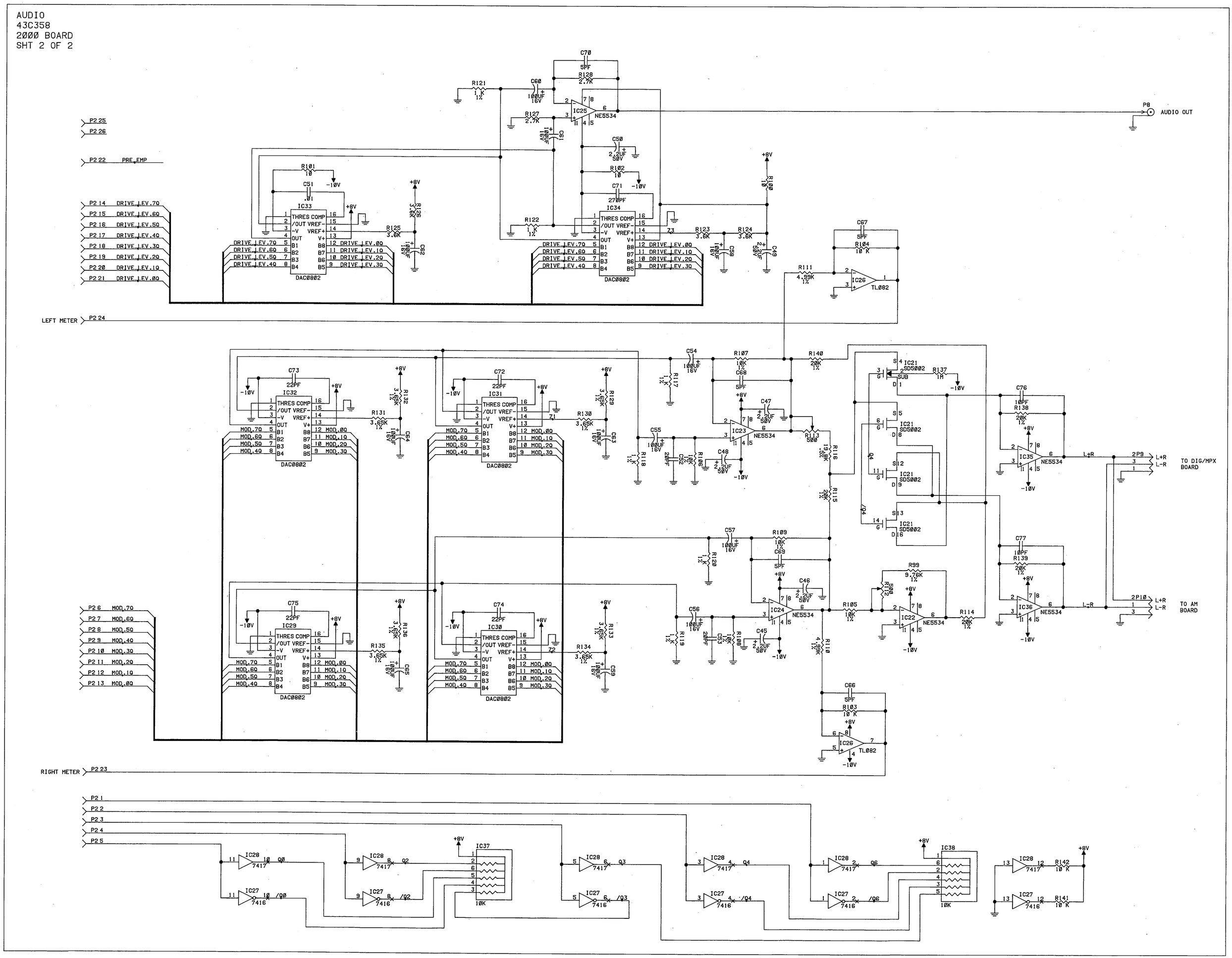

"2000" AUDIO BOARD
PART 2 OF 2

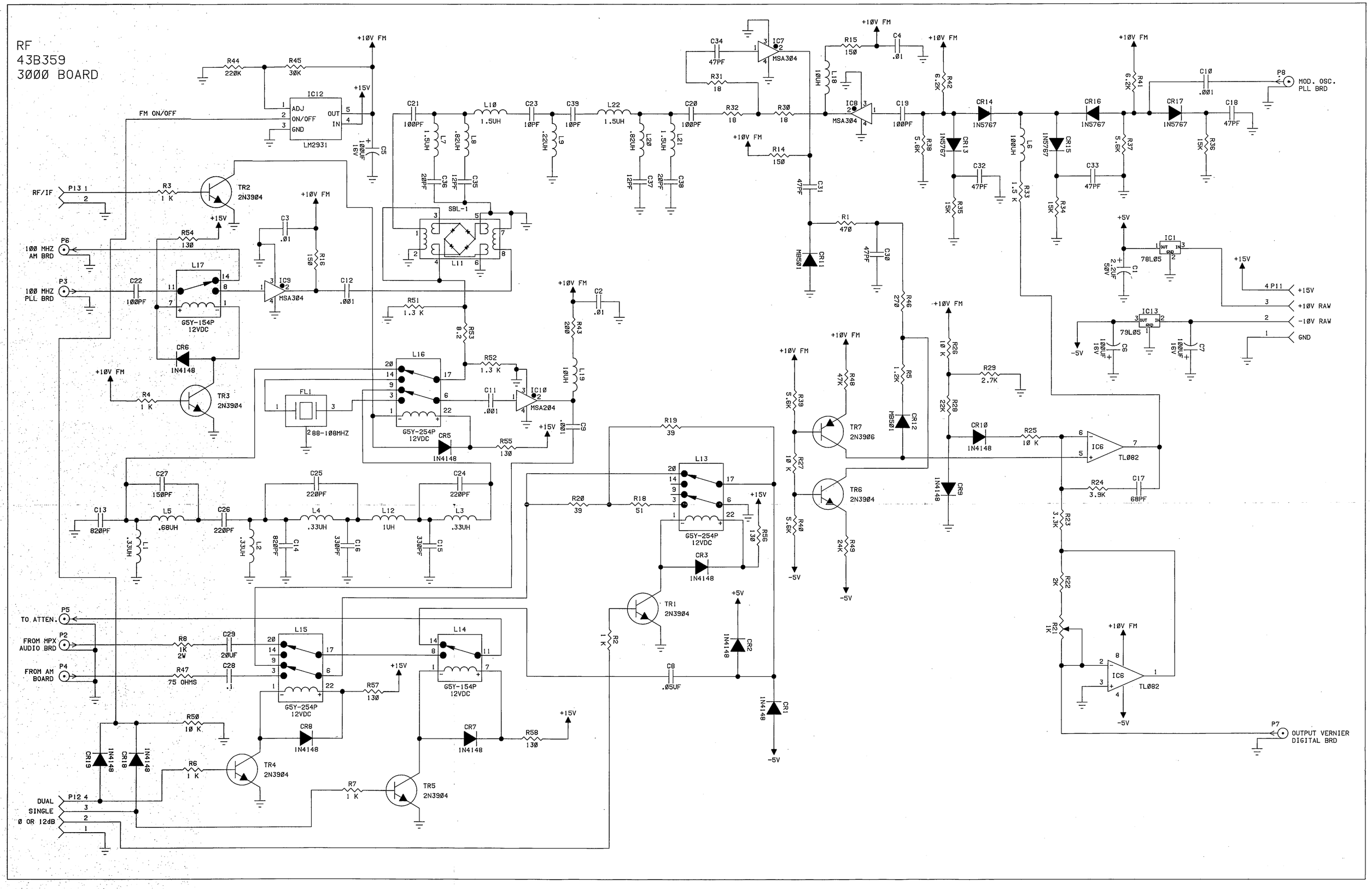

"3000" RF BOARD

This sheet includes board numbers 3000, 4000

SHEET 5

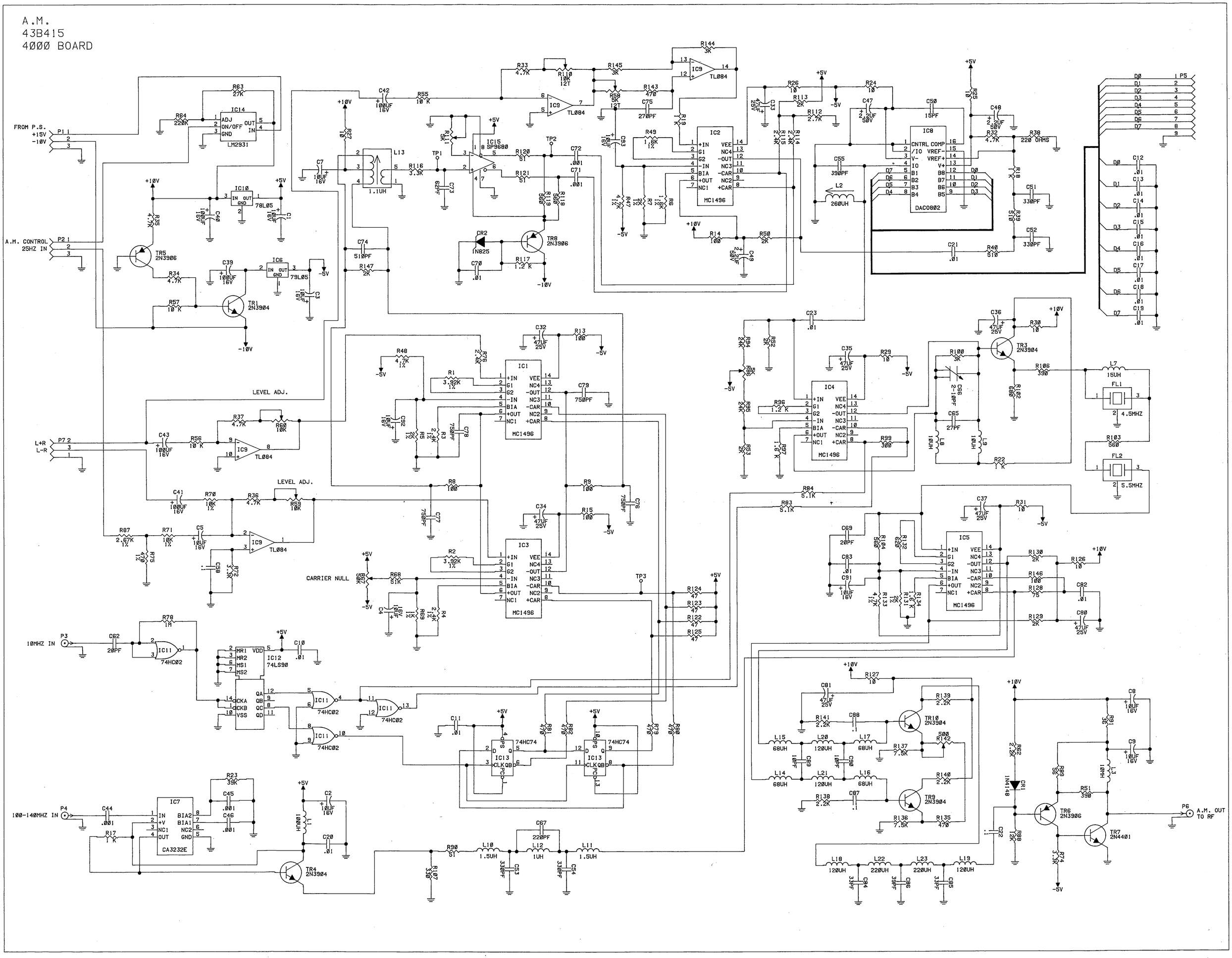

"4000" AM BOARD

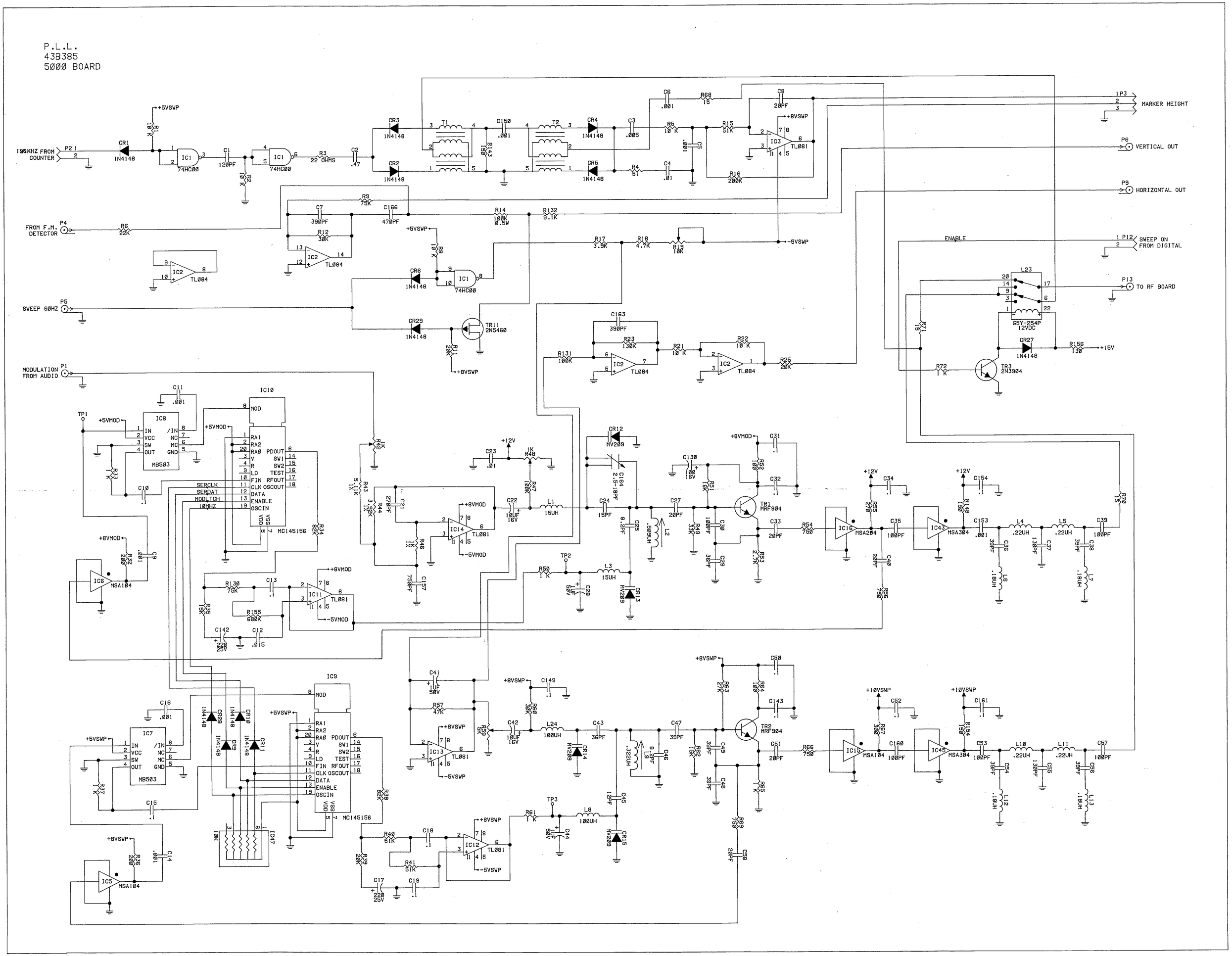

"5000" PLL BOARD
PART 1 OF 2

This sheet includes board numbers 5000

SHEET 6

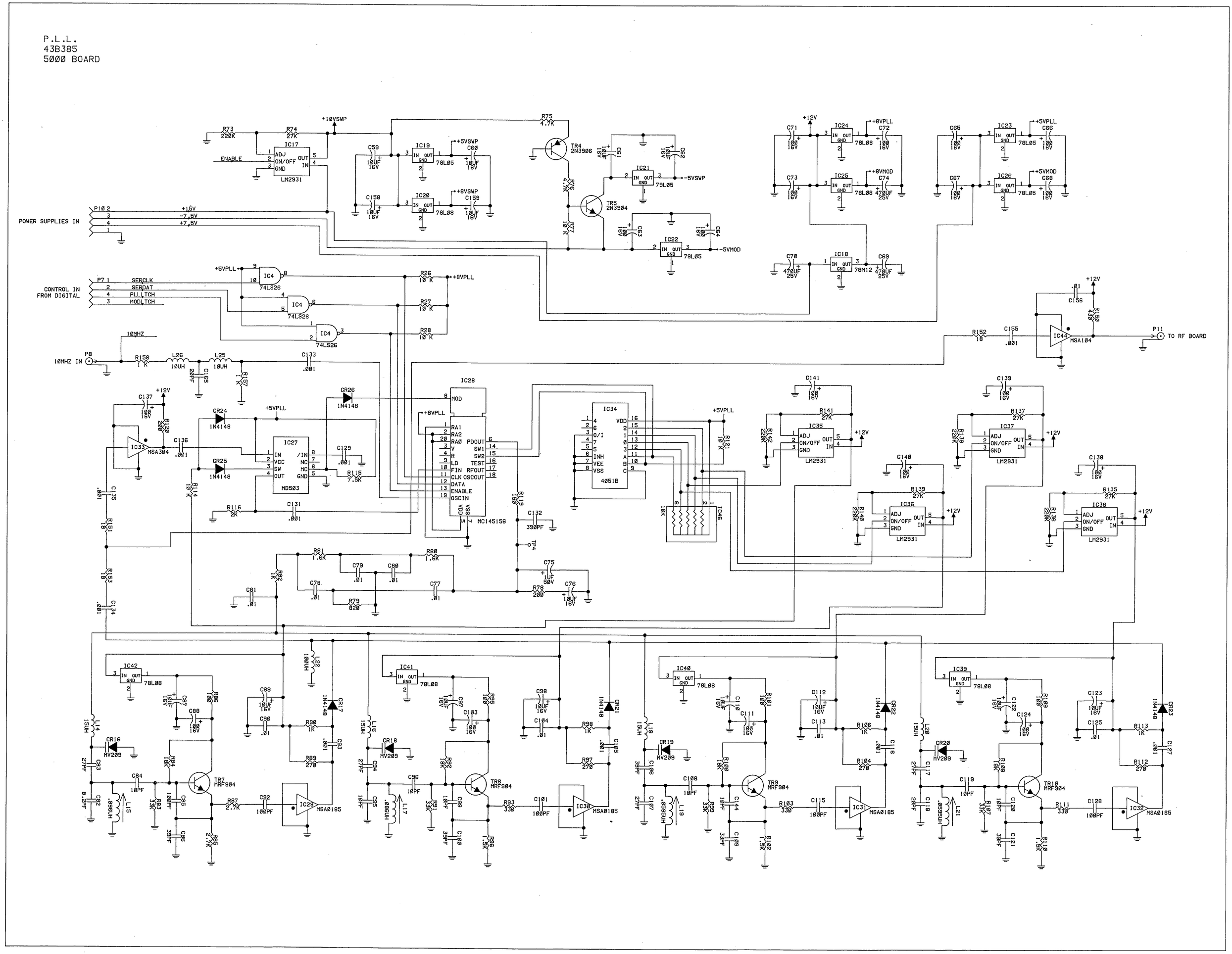

"5000" PLL BOARD
PART 2 OF 2

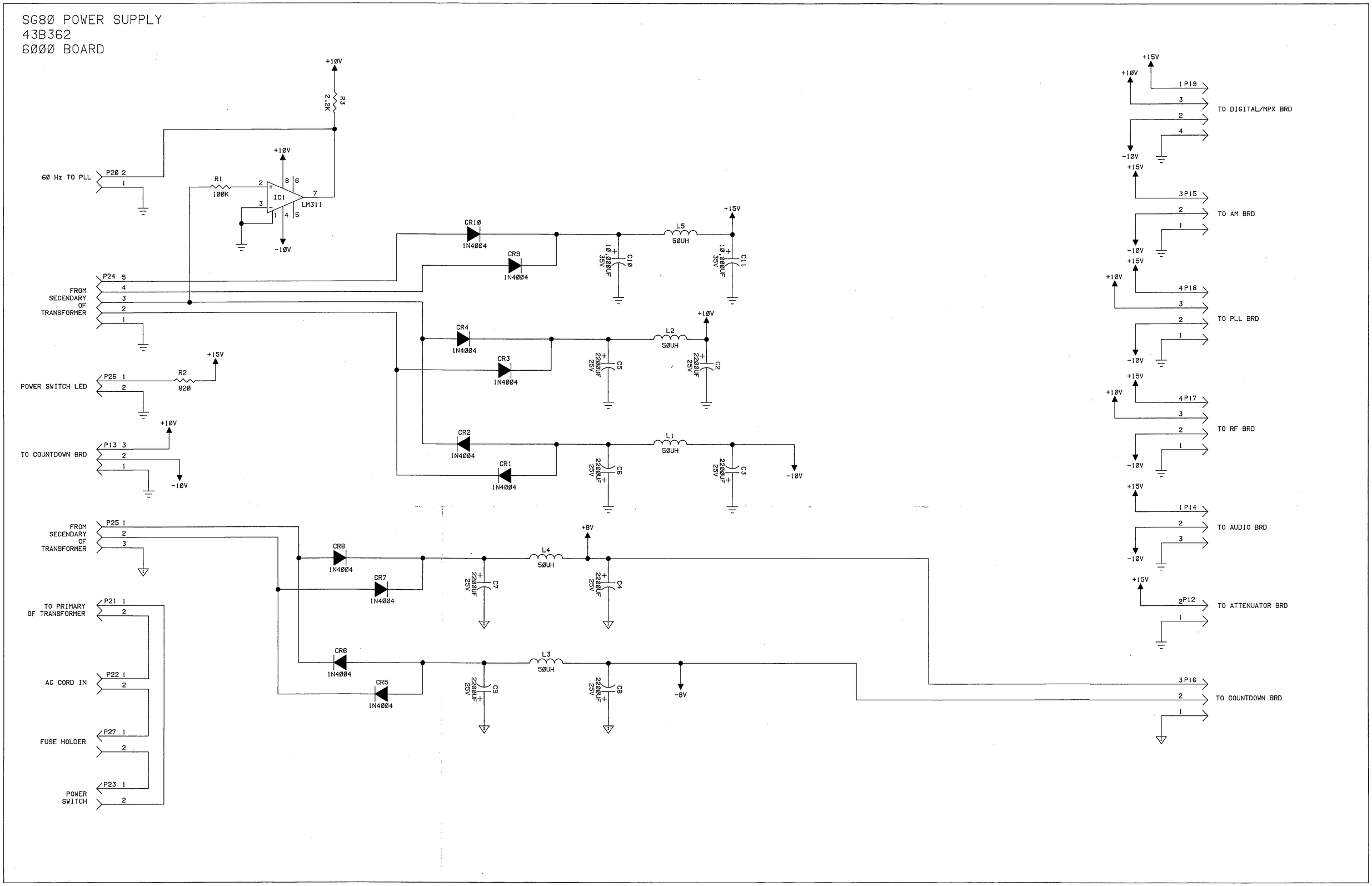

"6000" POWER SUPPLY BOARD

This sheet includes board numbers 6000, 7000

SHEET 7

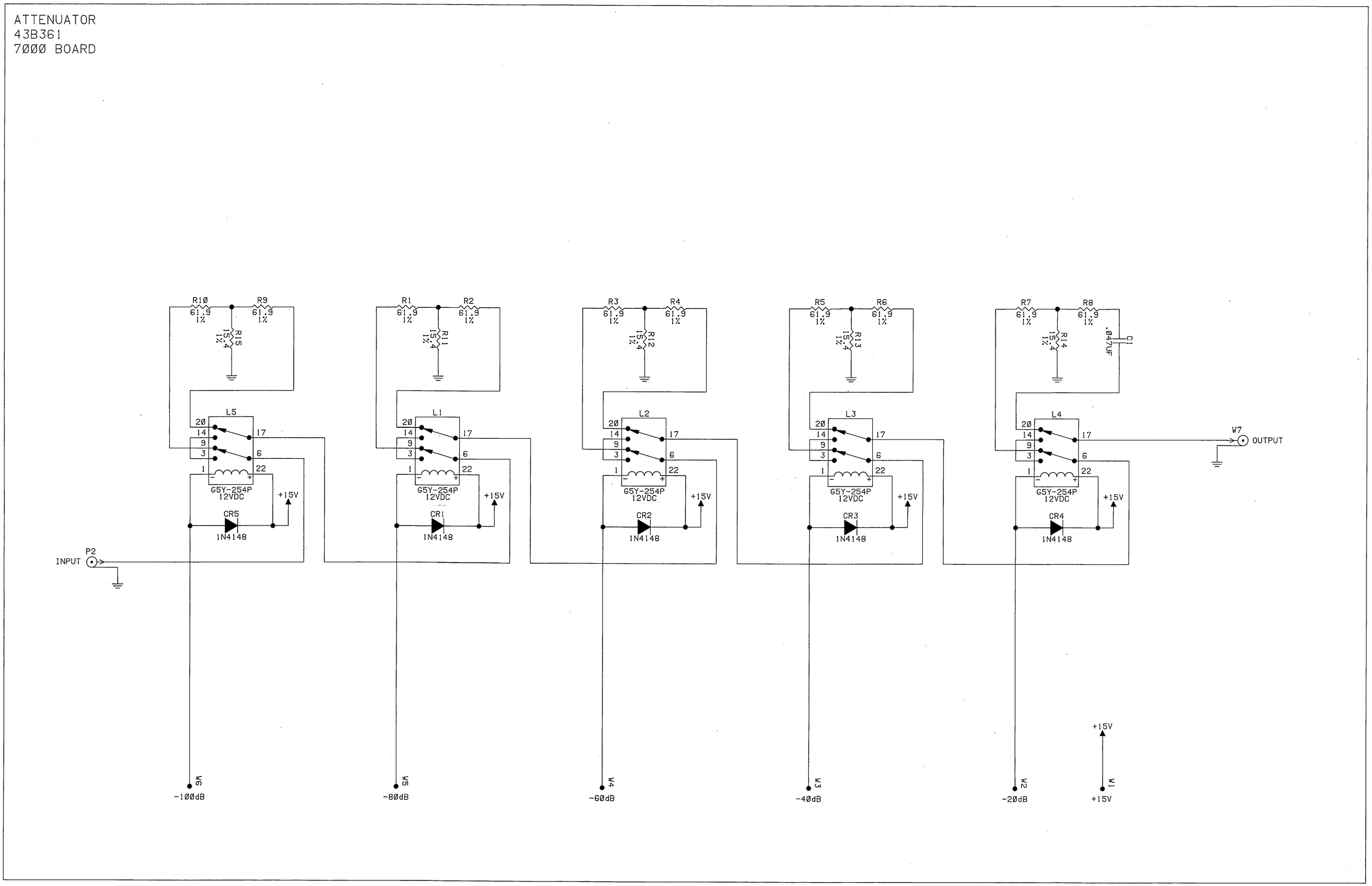

"7000" ATTENUATOR BOARD

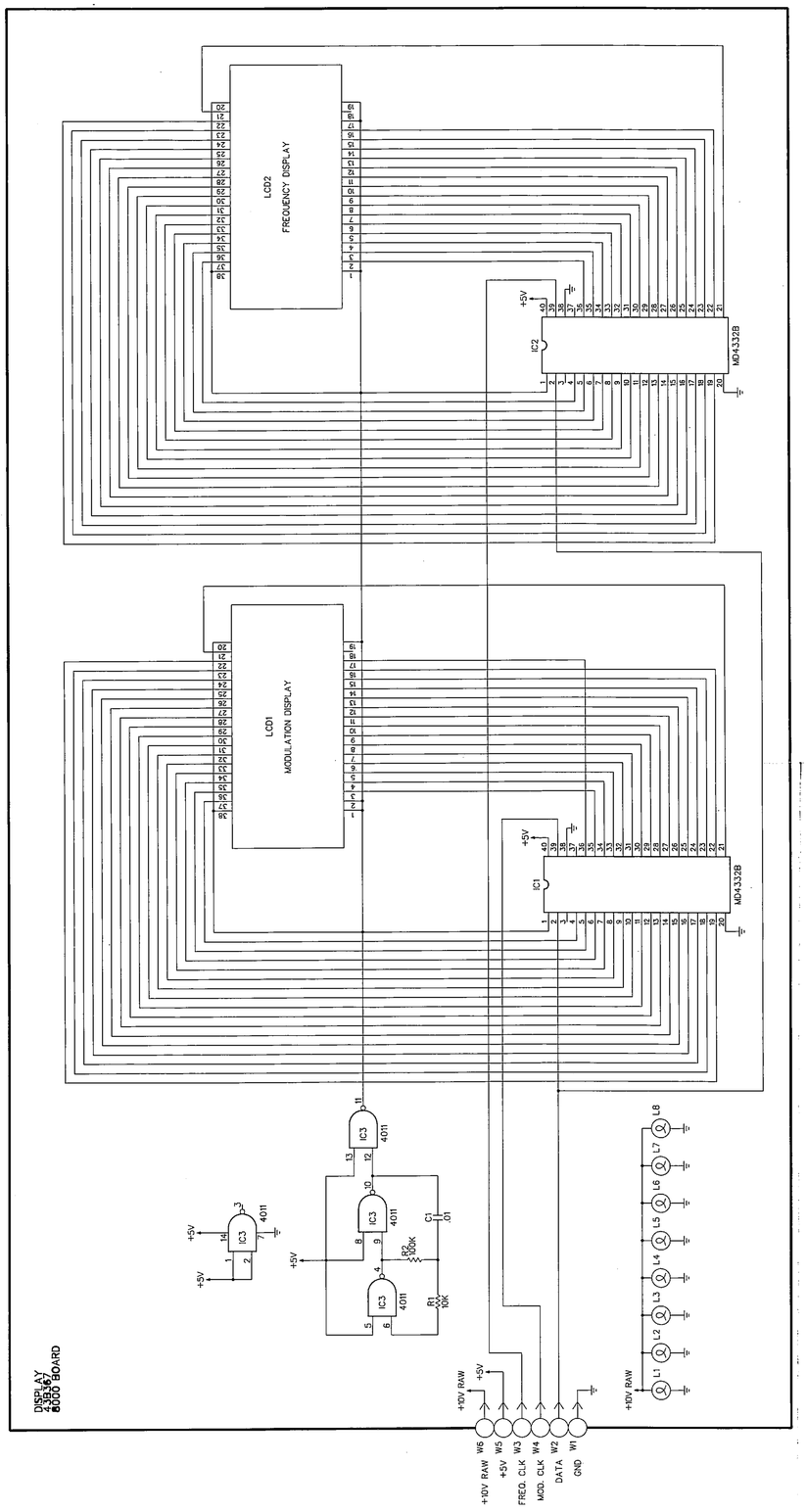

"8000" DISPLAY BOARD

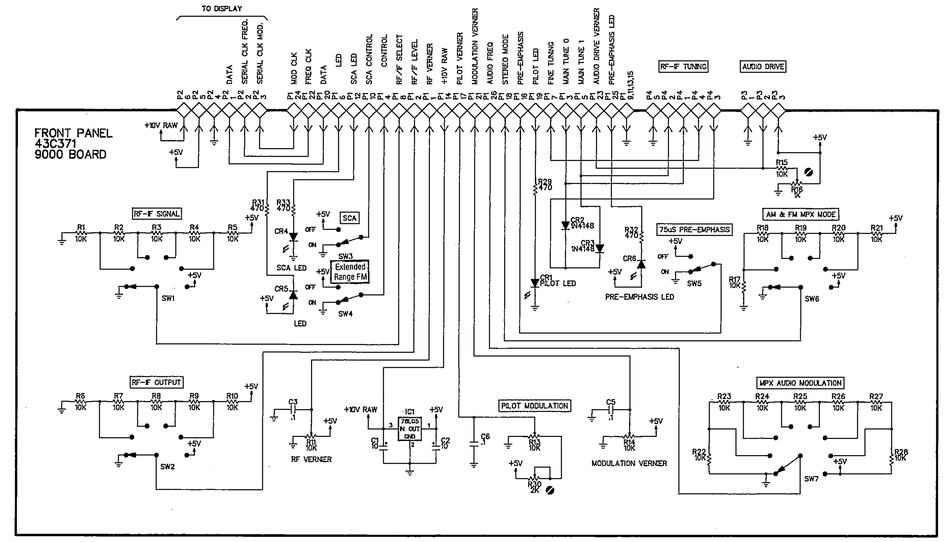

"9000" FRONT PANEL BOARD

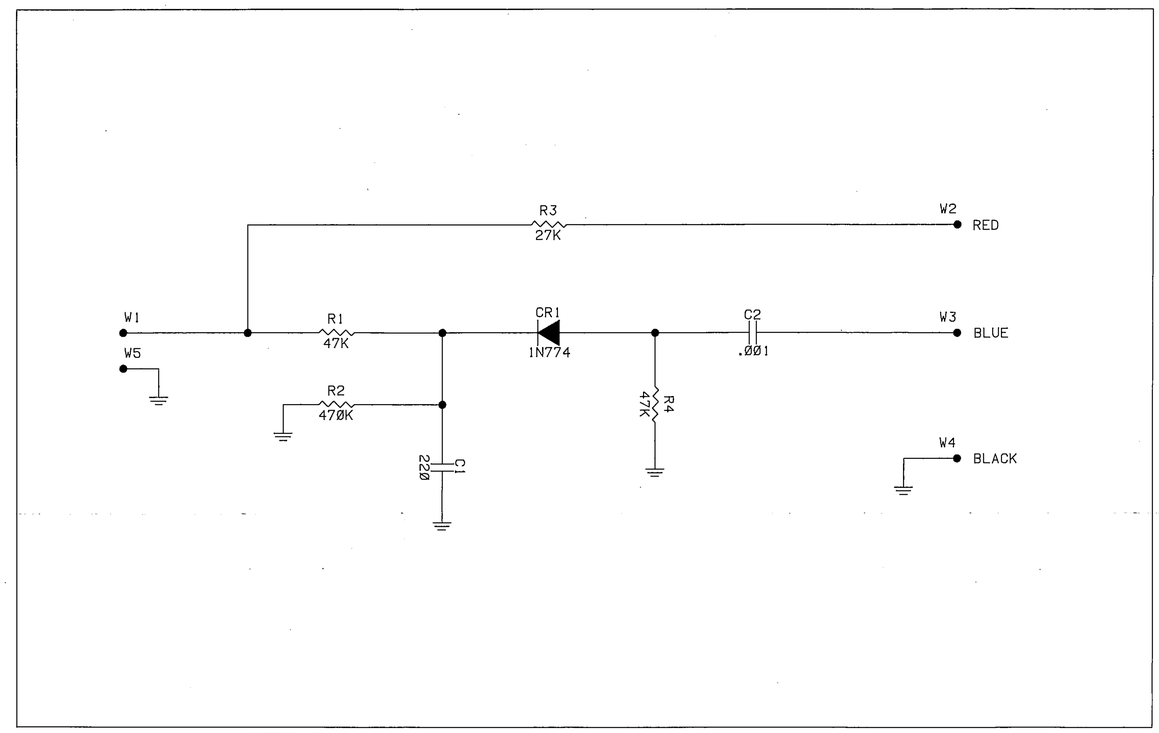

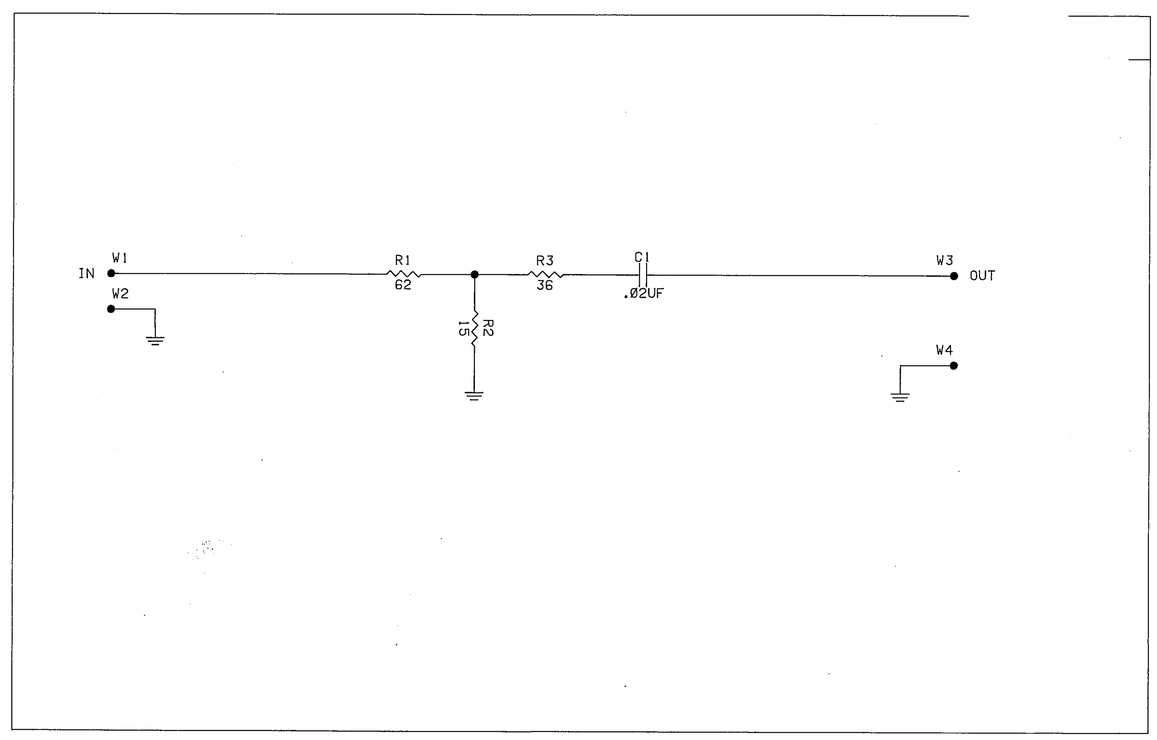

This sheet includes
Board numbers 8000, 9000
10,000 AM Test Leads.

SHEET 8

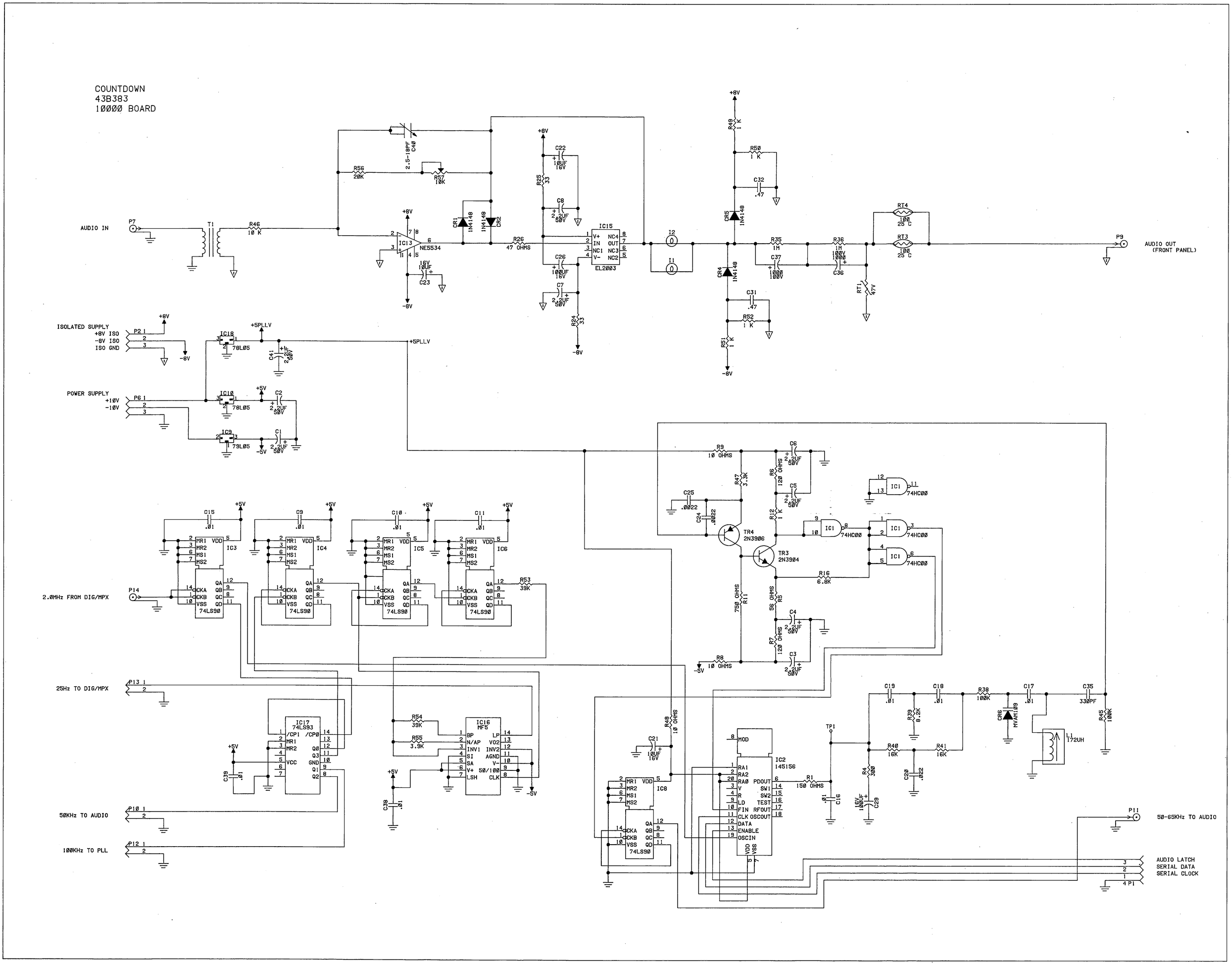

"10,000" COUNTDOWN BOARD

ManualsPlus.com

SG 80
Calibration notes

Test	HP switch box	Calibration points
1. FM THD	103,201,300,310	R5048,L5002,C5164
2. MOD %	200,210	FM R5042 AM R 4110
3. FM Seperation	103,201	R 1117,C 1060,R 2113
4. AM Seperation	202	R 4058,R 4059,R 4060

When setting up HP3488A use the following sequence: Local-reset-close-(#)-(,)-(#)-(,)-(#)-execute.

(note for FM Seperation RF output to max, modulation @ 100 %, Audio to 1 K hz. @ 100%, R only, L only.)
(note for AM Seperation pilot to 100 % audio off R1072 for 90 –20 db
pilot 0 % R 1071 for –55 db. 38 Khz on stereo mon. R1093 null
MPX seperation R 1118,C1058 & 98.)
(Mod cal 75db not 80)

A. For FM THD you have to press the up/down key on the RE201,then press the local/learn key on the RE201,now press the THDn key & readout results on the RE201 display.
B. For FM Mod % & AM Mod % use the HP8902A measuring reciever (FM, peak + auto tracking lights on)(AM, peak + & auto tracking lights on & AM , peak - &15Khz filter on.) (Belar to auto –SG80 to Stereo, pilot to 100%,audeo to 1 Khz signwave.)
C.
D. For FM seperation use the analog meters on the Belar stereo monitor unit. (Belar to auto mode for cal. , peak mode when idle.) (Belar to auto –SG80 to Stereo, pilot to 100%,audeo to 1 Khz signwave.)
E. For AM seperation use the BE AS10 AM modulation monitor analog meters. (BE AS10 set up:

1. Auto range both "on"
2. Inputs "L" & "R"
3. Polarity both "+"
4. Adjust SG*) until you get two green bars on the BE S10 with level to "pilot"
5. Switch between R only & L only & watch meters.

SG80 setup

1. stereo
2. AMRF
3. X100K
4. Vernier to get two green bars on BS A10
5. Pilot to 100%

ManualsPlus.com

6. Audio mod to 100%
7. Audio to 1 Khz signwave

AUTO LEVELING CALIBRATION

(Cal. Unit under test with chip with a checksum of 4FDE.)
(Programmer to device select 4, then push online IB72 address set to 30)
Follow directions for zeroing the HP 436A before starting auto leveling procedure.

ManualsPlus.com

SG80 MPX SEPERATION CALIBRATION

SG80 SET TO MPX, X100K, VERNIER APPROX 15dB, PILOT MODULCATION TO 100%, AUDIO TO 1 kHz SINEWAVE, AUDIO MODULATION TO 100%, MODE SWITCH TO STEREO.

SET STEREO MONITOR TO "L" AND "R". USING THE SG80 VERNIER SET THE METERS ON THE STEREO MONITOR SO THAT THEY CENTER AROUND ZERO dB.

PUSH THE PHSE BUTTON ON THE MONITOR AND ADJUST THE RECESSED CAL ON THE MONITOR TO GET A MAXIMUM NULL.

PRESS THE PILOT BUTTON ON THE MONITOR, ADJUST R1072 FOR A READING ON THE METER OF 90 WITH THE PILOT MODULATION TO NORMAL (100%). THEN ADJUST PILOT MODULATION TO 50% AND CAL R1071 FOR A READING OF 50. GO BACK AND FORTH BETWEEN THE ADJUSTMENTS UNTIL NO CAL IS NEEDED.

PRESS THE 38 kHz BUTTON ON THE MONITOR AND ADJUST R1093 FOR MAX NULL ON THE RIGHT METER. SHOULD GO BELOW -45Db

PRESS THE "L" AND "R" BUTTONS, AND THE "DE-EMP" BUTTON, ALSO THE 75Usec BUTTON ON THE SG80. READJUST PILOT AND AUDIO MODULATION TO 100%. READJUST VERNIER TO CENTER AROUND 0Db.

USING R1118,C1058, AND C1098 CAL FOR MAX SEPERATION WHEN SWITCHING THE SG80'S MODE SWITCH TO "L ONLY" AND "R ONLY". SHOULD BE BELOW 65Db.