ManualsPlus.com

SENCORE®
Means Success In Electronic Servicing
tech tips

Five Step Troubleshooting Method Solves VCR Safety Circuit Problems In Minutes

Five Step Process Saves Time-Verifies If The Problem Is In The Microprocessor:

Several circuits external to the microprocessor can cause system control problems. There is a simple five step procedure to determine if the problem is in the microprocessor or in an external circuit. The five steps are:

1. Check the power supply
2. Check the microprocessor clock frequency
3. Check the data in/data out lines
4. Check for a reset pulse
5. Check for bad grounds

Your SC61 Waveform Analyzer is the best instrument to perform this five step procedure, because you can completely analyze the important waveforms. In many cases, the cause of the system control problem will be found in step three of this five step microprocessor troubleshooting procedure. Steps one and two should be done first, however, since a properly

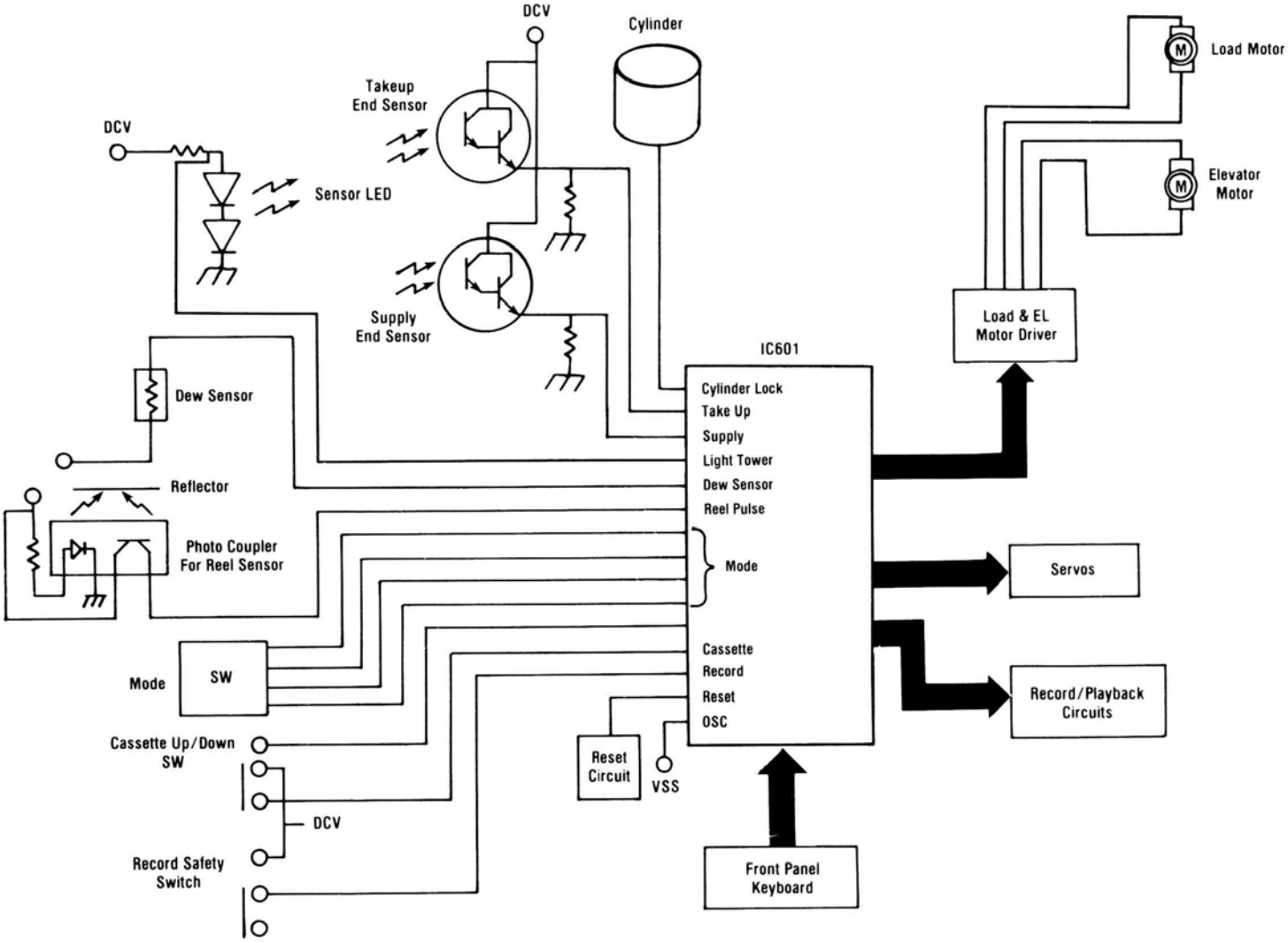

Fig.1: The system control microprocessor takes data from the safety circuits and front panel controls and uses this data to control the operation of the VCR.

ManualsPlus.com

operating power supply and correct clock frequencies are essential.

Seven Key Safety Circuits Tell The Microprocessor How The VCR Is Functioning

There are seven key functions that are monitored by the microprocessor to ensure safe operation. These functions are:

1. Position of the video tape cassette
2. Rotation of the video heads
3. Loading of the tape around the video cylinder
4. The end of the tape
5. Rotation of the take-up reel
6. The humidity level inside the VCR
7. Ability to record over existing programs

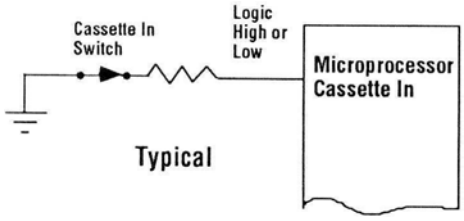

Fig. 2a: Some safety circuits supply either a digital logic high or logic low signal to the microprocessor.

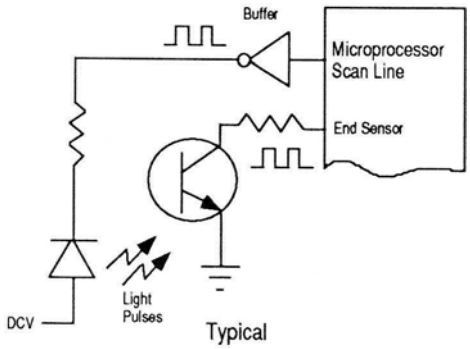

Fig. 2b: Some safety circuits turn data strobe signals on and off depending on the state of the VCR function it is monitoring.

Sensors check these functions and send the information to the microprocessor, which stops the VCR when a problem is detected. There are four general types of sensors found in VCRs:

1. Optical Sensors
2. Hall-effect Sensors
3. Mechanical Sensors
4. Humidity Sensors

Before you start checking these sensors, you should first analyze the symptoms. This will give you valuable clues into the cause of a system control problem. In addition, remember to use the five step microprocessor troubleshooting procedure (Tech Tip #109).

Five Step Troubleshooting Method For Safety Circuits

Troubleshooting of safety circuits can be broken down into a simple five step process:

1. Check the microprocessor input data lines
2. Check the operation of the sensor
3. Check the sensor power supply
4. Check sensor output processing circuit
5. Check the grounds and connections

Lets look at each step and see how to use your SC61 Waveform Analyzer to perform each step.

1. Check the microprocessor data lines: This is actually step three of the microprocessor troubleshooting procedure. A system control problem can be caused by a variety of problems, some of which are associated with safety circuits. Your first step is to verify that the problem is caused by a safety circuit, and if so, which one.

System control trouble symptoms often point to the problem. For instance, if the VCR is dead, it could be caused by:

a. An end sensor or its associated light tower.
b. A defective dew sensor could be inhibiting operation.
c. The mode or cassette position circuits may indicate an improper condition.

These are some of the first inputs to check. If the VCR starts to load and then unloads, it could be caused by a defect in one of the previously mentioned circuits or the cylinder lock circuit or reel sensor circuits. In any case, checking the data being fed into the microprocessor will isolate the problem down to the defective circuit. Figure 1 shows the various safety circuits used in a VCR.

The signals fed from the safety circuits to the microprocessor can be of several different types. Some circuits simply send a logic high or low to the microprocessor. Other circuits either allow a scanning pulse to return to the microprocessor, or inhibit the pulse. Various combinations of these signal types can be found in the same VCR. Your SC61 Waveform Analyzer works best for troubleshooting these problems. Its digital voltmeterfunction letsyouquicklycheckforlogic highs and lows; the CRT and peak-to-peak digital voltmeter functions let you check pulse signals, and the same test probe can be used universally for all signal types.

Check each data line: Connect your SC61 Waveform Analyzer test probe to the data line you want to test. Press the DCV button on the SC61 Waveform Analyzer. Read the DC voltage on the LCD digital display. Compare this reading with the voltage level given in the service literature. Next, press the PPV button and read the peak-to-peak voltage on the LCD digital display. If the VCR uses a scanned sensor system, the peak-to-peak meter will read the amplitude of the pulses on this waveform.

NOTE: *In the case of reel sensor pulses, the frequency of the output signal is typically very low when the VCR is in the play mode. This frequency is on the order of 1 Hz or less, and looksmore like a periodicchange in the DC /eve/. Use the SC61's DCV function and slowly turn the take-up reel by hand. Watch for a change in the DC voltage reading on the SC61 Waveform Analyzer digital display as you turn the take-up reel.*

If the peak-to-peak digital readout indicates that there is a signal present, turn the timebase switch on the SC61 Waveform Analyzer until the waveform is seen on the CRT. In most cases these waveforms will be low frequency. Set the timebase on the SC61 Waveform Analyzer to a low sweep rate so you can see this signal. Compare the waveform observed on the SC61

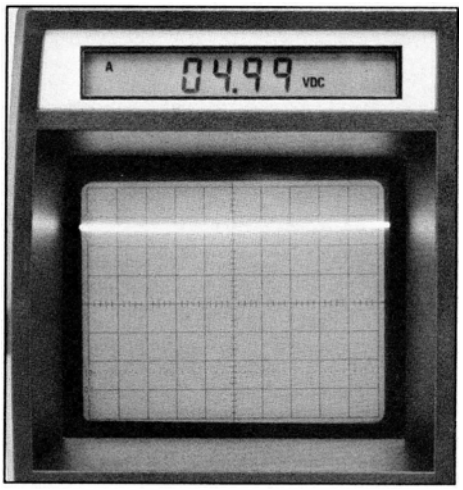

Fig. 3: The DCV feature of the SC61 Waveform Analyzer lets you quickly determine the output level of the signal being fed to the microprocessor.

ManualsPlus.com

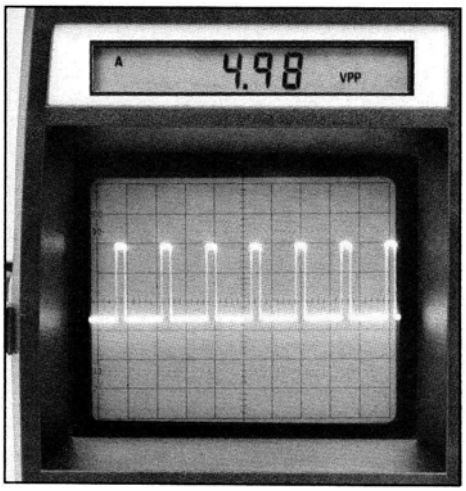

Fig. 4: The PPV digital meter and CRT on the SC61 Waveform Analyzer shows you the size and waveshape of pulsed sensor outputs.

Waveform Analyzer to those shown in the service information for the VCR.

One typical system control problem, is the VCR that begins to load the video tape and then unloads it. In this example, use the SC61 Waveform Analyzer to monitor what happens to each safety circuit signal as the VCR begins to load and/or play. In addition, check the amplitude of the signals.

Microprocessors operate on logic high and low signal levels. A voltage that is not high enough to be considered a logic high, or low enough to be considered a logic low, will result in intermittent VCR operation. Figure 5 shows the voltage levels needed for proper operation of TTL and CMOS logic circuits. Use the digital meter on your SC61 Waveform Analyzer to ensure that the signals are large enough to swing beyond the questionable voltage region.

2. Check the operation of the sensor: Each safety circuit is composed of a sensor, interconnecting wires and connectors, and sometimes an interface circuit between the sensor and the microprocessor. A defect can occur at any point along this signal path. We could walk back, stage by stage, from the microprocessor to the sensor, but in most cases it is faster to make the next test at the output of the sensor. There are at least two reasons the sensor output should be checked as the second step of our five step sensor troubleshooting procedure. 1.) Sensors have traditionally been high failure items. 2.) Sensors are relatively easy to find since most of them have only specific locations that they can be in. For instance, the end sensors are always in the same place in all VCRs, the take-up reel sensor is always located close to the take-up reel and so on. It only takes a few seconds to locate the test points for these relatively high failure rate components.

Again, your SC61 Waveform Analyzer is the best instrument for checking the sensors since it works universally on whatever type of signal the sensor puts out.

Some sensors, such as the mechanical switches and the dew sensor, can be checked with an ohmmeter. A more dynamic test, however is to use the SC61 Waveform Analyzer to check the voltage output of the sensor, because microprocessors sense voltage level changes, not resistance. An ohmmeter does not verify that the voltage levels going to the microprocessor are of sufficient amplitude to be recognized.

Safety circuits are tested somewhat differently, depending on the type of sensor used. The following specifics are given to help guide you in testing the different sensor functions.

Testing the cassette switches and mode switches: Press the DCV button on the SC61 Waveform Analyzer and connect the test probe to the safety switch. For cassette position switches, open and close the switch contacts and look for a change in the output signal. If DC signals are used in these switches, watch the digital meter on the SC61 Waveform Analyzer for a change in DC voltage level.

For mode switches, press the play button on the VCR and monitor the output voltage from each output pin as the tape loads around the video cylinder. Compare the voltage on each pin with the mode switch timing information in the service literature.

If the VCR will not begin the loading process, check to be sure the switch outputs are correct for an unloaded tape. Sometimes, a VCR malfunctions simply because a gear or lever has slipped and the mode switch contacts are in the wrong position. This results in incorrect data being fed to the microprocessor.

Testing the end sensors: Push the DCV button on the SC61 Waveform Analyzer and connect the test probe to the output of the end sensor. Interrupt the beam of light coming from the light tower by placing your finger over the light input hole for the sensor or cover the end sensor with black tape. Read the digital display on the SC61 and look for a change in sensor output voltage. If no change is observed in the end sensor output voltage when the sensor is covered, it may mean that the end sensor is bad or the light tower is defective. In the case of infrared light towers, you cannot visually inspect for light output. Instead, shine a light on the end sensor and again check the output. If you now get a change in the end sensor output voltage, the light tower is not putting out light and should be checked.

In some VCRs, the output of the end sensor will be a pulse rather than a DC voltage change. If you suspect that the VCR you are working on is of this type, simply press the VPP button on the SC61 Waveform Analyzer and read the results on the digital display. If you get a VPP reading, verify the results by setting the attenuator and timebase to lock in on the signal.

Testing the reel sensors: Press the DCV button on the SC61 Waveform Analyzer and connect the test probe to the output of the take-up reel sensor. Slowly rotate the take-up reel while watching the digital display on the SC61 Waveform Analyzer. The digital display should alternate between a low level voltage reading and a higher level voltage reading. You can also observe this change on the CRT by switching the

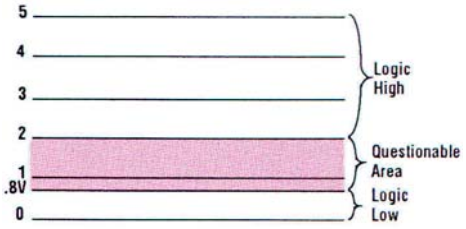

Fig. 5a: Microprocessors that operate with TTL type signals must have digital high and low signals that fall outside the questionable area.

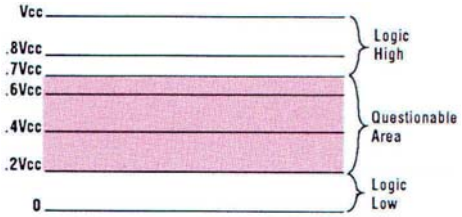

Fig. 5b: CMOS type microprocessors require digital high and low signals that fall outside the questionable voltage level.

ManualsPlus.com

input switch to DC and watching the trace on the CRT. If the sensor isoperating properly, the CRT trace will alternate from one level to another.

Testing drum lock: Press the VPP button on the SC61 Waveform Analyzer and connect the test

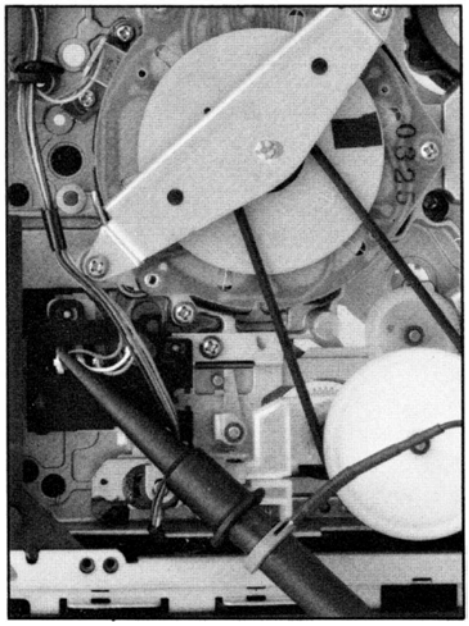

Fig.6: Check the output of each pin on the mode switch to determine if the signals are correct for the position of the tape loading pins.

probe to the output signal from the video head drum FG or PG signal. You will need to check the schematic to determine what signal is used in the particular VCR you are servicing. Press the play button and visually verify that the video drum is turning. If the video drum is turning and a signal is present, the peak-to-peak voltage amplitude of the signal will be displayed on the digital display of the SC61 Waveform Analyzer.

Note: *A case of no video drum rotation may be causedbya headservoproblem or the microprocessor may not be telling the servos to operate.*

Testing the Dew Sensor: Press the DCV button on the SC61 Waveform Analyzer and connect the test probe to the side of the dew sensor electrically closest to the microprocessor. Compare the DC voltage displayed on the digital display of the SC61 Waveform Analyzer with the voltage given in the service literature. Dew sensors currently are designed to change resistance with increased humidity. This change in resistance results in a change in the voltage across the dew sensor.

3. Check the sensor power supply: A low or missing voltage at the output of a sensor does not immediately mean that the sensor is bad. Before replacing the sensor, make sure that there is power going to the sensor. This applies to all types of safety circuit sensors. This is especially true of Hall-effect sensors. These sensors require an additional bias voltage to operate.

To check the sensor power supply, press the DCV button on the SC61 Waveform Analyzer and connect the test probe to the power supply. Read the voltage displayed on the digital display and compare with the power supply voltage listed on the schematic.

4. Check the sensor output processing circuit: Some sensors use additional circuits to process the signal before it goes to the microprocessor. In the case of a dew sensor, for instance, comparator circuits are often used to sense a change in the output voltage and output either a logic high or low. Other sensors use similar circuits to ensure that the signal going to the microprocessor is clean and distinct. If the sensor output looks good, but the signal at the microprocessor is incorrect, check the operation of any intermediate processing circuits.

5. Check the grounds and connections: Wires and connectors transfer the signals from the

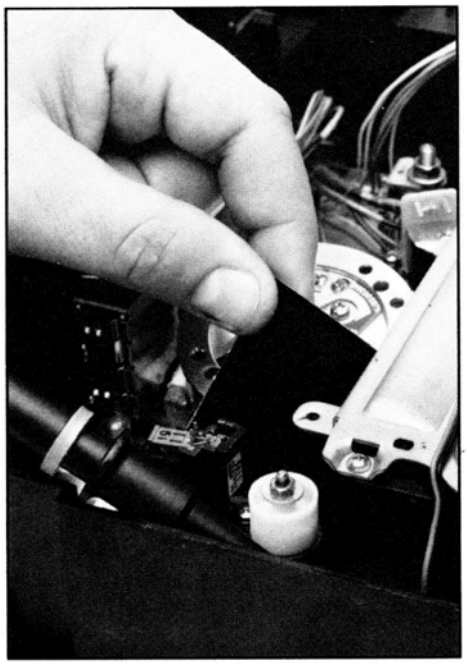

Fig.7: Interrupt the light beam to the end sensors to quickly determine if they are operating correctly.

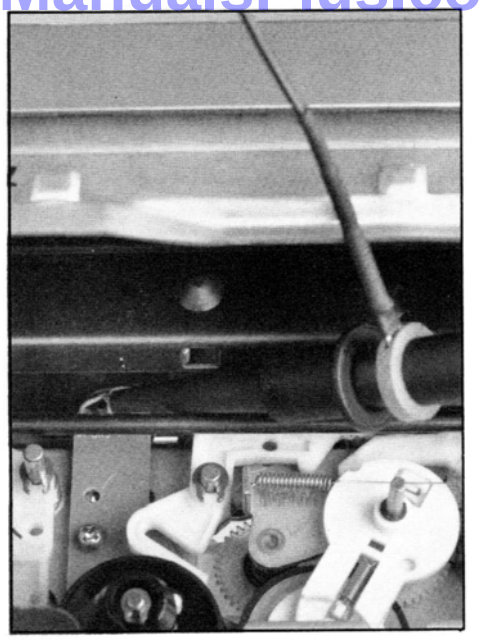

Fig. 8: Slowly turn the take-up reel as you monitor the reel sensor output voltage. You should see the DC voltage alternately switch low and high.

sensors and auxiliary circuits to the microprocessor. If the signal is bad at the microprocessor but the sensor and auxiliary circuits test out good, check for a bad connection or a pinched or open wire within the circuit path.

For more information,
Call Toll Free 1-800-SENCORE
(1-800-736-2673)

SENCORE
3200 Sencore Drive, Sioux Falls, South Dakota 57107
Fax: 1-605-339-0317 www.sencore.com

Form 4316 Printed In U.S.A.