ManualsPlus.com

VA62
Universal Video Analyzer

Schematic & Parts List

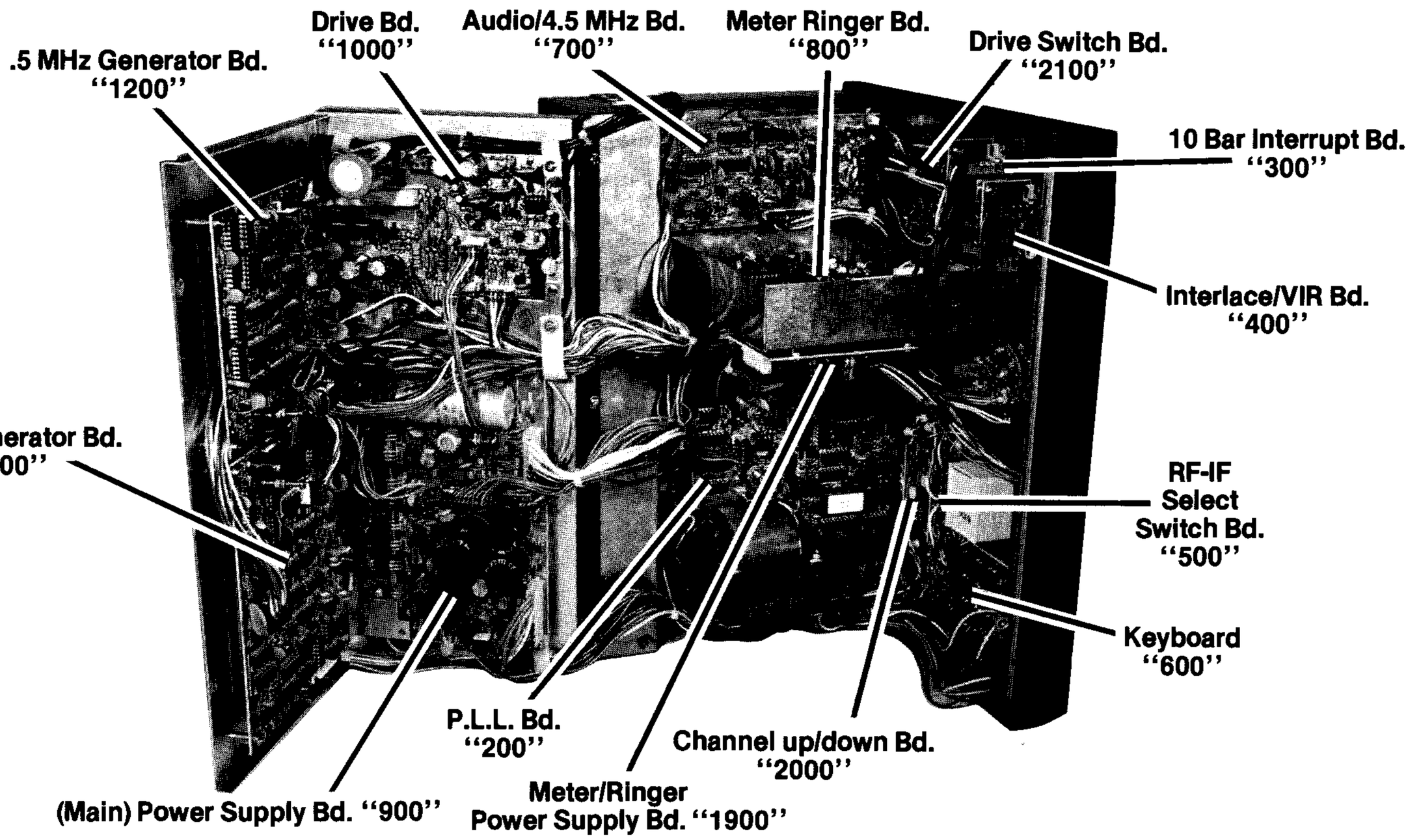

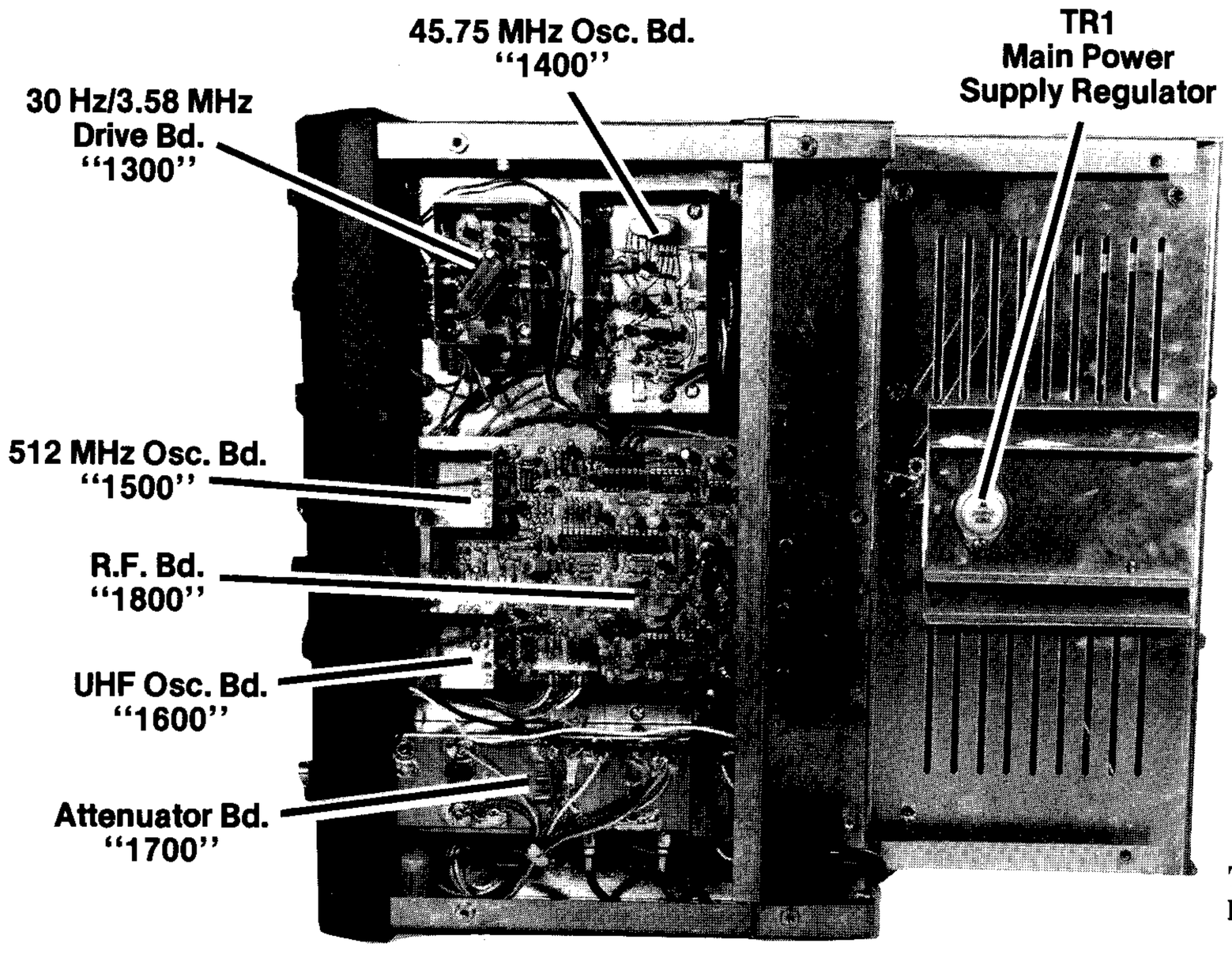

INDEX

BOARD NUMBER	SEE SHEET#
100	2
200	3
700	2
800	6
900	4
1000	4
1100	5
1200	3
1300	2
1400	2
1700	2
1800	6
1900	2
2100	4

This sheet includes parts list.

SHEET 1

ManualsPlus.com

SCHEMATIC REFERENCE	PART NO.	DESCRIPTION
LCD display (100 BOARD)		
	143B232	P.C. Board, LCD Display, complete assembly
IC1, 2	69G92	IC, 4332, LCD Driver
LCD1	23G77	LCD, Custom 4 digit
LCD2	23G78	LCD, Custom 3½ digit
P.L.L. (200 BOARD)		
	143B233	P.C. board, P.L.L. complete assembly
IC1	69G100	IC, 555, timer
IC2	69G71	IC, 8035
IC3, 9	69G36	IC, 4518
IC4, 20	69G7-B	IC, 4001, Quad 2 Input NOR Gates
IC5	69G37	IC, 74LSOO Quad NAND Gate
IC6	69G91	IC, 74LS377, Octal D Edge Trig LCH
IC7	69G98	IC, 2716, Programmable memory Note: This IC is factory custom programmed and matched to the unit. For IC replacement, return the unit to the Sencore factory.
IC8	69G128	IC, ER1400, Earom
IC10	69G3-B	IC, 4011, Quad 2 Input NAND
IC11, 19	69G63	IC, TL081, Bi-FET Op Amp
IC12	69G101	IC, 145155, P.L.L.
IC13	69G129	IC, 74LS153
IC14, 15	69G11-B	IC, 4016, CMOS, Quad switch
IC16	69G8-B	IC, 4013, Dual D Flip-Flop
IC17	69G138	IC,R-2R Ladder A.B. 316L08503
IC18	69G139-B	IC, 4015, Dual 4-Stage Shift Reg
TR1, 2, 5, 7, 9-13	19A33-1	Transistor, 2N3904 NPN
TR4	19A19	Transistor, MPF-102 N-Channel FET
TR6,8	19A34-1	Transistor, 2N3906, PNP
CR1, 2, 4, 5	50C5-2	Diode, 1N4148
CR3	50C4-6	Diode, 6.2V, Zener, 10%
R43	15C22-3	Resistor, Pot, 100K ohm, 20%, Mini P.C. Mtg
C13, 19, 20, 21, 28	24G104	Capacitor, .1 uF, +80, −20%, 100V, Disc
C2, 9, 15	24G347	Capacitor, 3-20 pF Trimmer Tubular
C3	24G176	Capacitor, 47 pF, ±10%, 500V, NPO Disc
C4	24G113	Capacitor, 270 pF, Discap
C6, 18	24G299	Capacitor, 100 pF, 20%, 600V
C14	24G52	Capacitor, 5 pF
C8	24G53	Capacitor, 30 pF, 5%, 500V Disc
C10	24G59	Capacitor, .05 uF, Discap
C11, 34	24G384	Capacitor, 2.2 uF, ±20%, 50V, Lytic
C12	24G207	Capacitor, .01 uF, Discap
C16	24G317	Capacitor, 36 pF, 5%, 500V, Disc
C17	24G84	Capacitor, 27 pF, Discap NPO, ±10%, 500V
C22-25, 27, 29, 30, 33	24G207	Capacitor, .01 uF, +80, −20%, 100V, Disc
Y1	47A28	Crystal, 4.0000 MHz, Xtal
Y2	47A29	Crystal, 1.024 MHz, Xtal
Y3	47A32	Crystal, 3.5000 MHz, Xtal
L1	46G81	Coil, 56 uH, 5%, Coilcraft type 4
L3	46G103	Coil, 100 uH
AUDIO/4.5 MHz (700 BOARD)		
	143B238	P.C. board, Audio/4.5 MHz, complete assembly
IC1, 2	69G46	IC, TL084, Quad, Bi-FET Op Amp
IC3	69G102	IC, 74LS21, Dual 4-input AND gates
IC4	69G86	IC, 74LS393, Dual 4 bit counter
IC5	69G32-B	4046 CMOS P.L.L.
IC6	69G31	IC, 74LS74, Dual D Flip-Flop
TR1, 2, 4	19A33-1	Transistor, 2N3904, NPN
TR3	19A34-1	Transistor, 2N3906, PNP
CR1, 3	50C5-2	Diode, 1N4148
CR2	50C18	Diode, MV209 Varicap
R2, 6, 10, 14	15C7-9	Resistor, 100 ohm, Pot, 30%, Vert Mtg

ManualsPlus.com

SCHEMATIC REFERENCE	PART NO.	DESCRIPTION
R18	15C7-11	Resistor, 50K, Pot, Linear taper Vert Mtg
R21	15C7-2	Resistor, 10K, Pot
C1-6	24G188	Capacitor, .001 uF ±5%, 33V Poly
C7, 8	24G445	Capacitor, .001 uF, ±2.5%, 33V, Poly
C9	24G382	Capacitor, 10 uF, 16V, Lytic
C10	24G394	Capacitor, 22 uF, ±20%, 35V, Low Leak Lytic
C11	24G104	Capacitor, 0.1 uF, +80, −20%, 100V, Disc
C12	24G17	Capacitor, .001 uF, +100, −0%, 500V, Disc
C13, 15, 20, 24-26	24G207	Capacitor, .01 uF, +80, −20%, 100V, Disc
C14	24G347	Capacitor, 3-20 pF, Trimmer Tubular
C16	24G176	Capacitor, 47 pF, ±5%, 500V, NPO Disc
C17	24G152	Capacitor, 68 pF, ±10%, 500V, Disc
C18	24G82	Capacitor, 100 pF, ±20%, 500V, Disc
C19	24G85	Capacitor, 15 pF, ±10%, 500V, NPO, Disc
C21, 22	24G75	Capacitor, 27 pF, ±5%, 500V, Disc
C27	24G384	Capacitor, 2.2 uF, ±20%, 50V, Lytic
C31	24G407	Capacitor, 47 uF
L1	46G96	Coil, 10 uH, 5%, Coilcraft type 4
I1-4	20G22	Lamp, 12V & 30 mA
METER/RINGER (800 BOARD)		
	143B239	P.C. board, Meter/Ringer, complete assembly
IC1	69G46	IC, TL084, Quad, Bi-FET Op Amp
IC2	69G113	IC, LM306, Voltage Comp
IC3	69G121	IC, 8748, UC/1K Eprom Note: Specify ''PGM'' number when ordering
IC4	69G7-B	IC, 4001, Quad, Two Input NOR Gates
IC5	69G84	IC74LS365, Hex Tri-state buffer
IC7	69G8-B	IC, 4013, Dual D flip-flop
IC8	69G100	IC, 555, timer
IC9	69G112	IC, AD7542, 12 bit DAC
IC11, 12	69G37	IC, 74LS00, Quad NAND Gate
IC13	69G140	IC, 74C941, Octal Buffer-Tri State
IC14	69G47	IC, MC14433, A/D Convertor
IC15	69G5-B	IC, 4024, 7 Stage Binary Counter
IC16	69G116	IC, 79L05, −5V, .1 Amp Reg
TR1	19A31	Transistor, 2N3958 Dual N-Channel FET
TR2-6, 9-13	19A33-1	Transistor, 2N3904, NPN
TR7	19A29-1	Transistor, MJE180
TR8	19A19	Transistor, MPF-102 N-Channel FET
TR14	19A34-1	Transistor, 2N3906, PNP
TR15	19A50	Transistor, FET, J211
CR1	50C12-1	Diode, 1N823, 6.2V, TCZ 5%
CR2, 17 (select 1)	50C5-4	Diode, 1N456, 30V PIV, (selected)
CR7	50C3-1	Diode, 1N34A, 75V, PIV, 60VDC, 5 mA
CR8, 9, 12, 13, 14	50C5-2	Diode, 1N4148
CR10	16S10	Diode, 1 Amp, 400V, PIV, 1N4004
CR11	50C4-8	Diode, Zener, 20V, ±10%, 1N4747
CR18	50C5-2	Diode, 1N4148
R1	14C38-4564	Resistor, ¼W, 1%, 45.6 K
R2, 14, 15	14C38-2004	Resistor, ¼W, 1%, 20 K
R3	14C38-9602	Resistor, ¼W, 1%, 960
R4, 18	15A27-2	Resistor, Pot, 10 K ± 20%, Linear Horiz
R5	14C87-1357B	Resistor, .05%, 50 PPM
R6	14C87-1356B	Resistor, .05%, 50 PPM
R7	14C88-1355B	Resistor, .05%, 50 PPM
R8	14C88-1504B	Resistor, .05%, 50 PPM
R9	14C38-6504	Resistor, ¼W, 1%, 65 K
R16	14C38-1004	Resistor, ¼W, 1%, 10 K
R17	14C38-5003	Resistor, ¼W, 1%, 5 K
R19	14C38-2834	Resistor, ¼W, 1%, 28.3 K
R25	14C38-1505	Resistor, ¼W, 1%, 150 K
R35	15C7-11	Resistor, 50K, Pot, Linear Taper, Vert Meg
R38	14C38-8204	Resistor, ¼W, 1%, 82 K
C1, 9, 10, 12, 13	24G382	Capacitor, 10 uF, 16V, Lytic, Radial lead.

ManualsPlus.com

SCHEMATIC REFERENCE	PART NO.	DESCRIPTION
C2, 3	24G433	Capacitor, 7.5-50 pF, Trimmer, 400 V
C4	24G415	Capacitor, 2200 pF, ±2.5%, 33V Poly
C5	24G414	Capacitor, 22000 pF, ±2.5%, 33V, Poly
C6	24G183	Capacitor, .01 uF, Poly
C7	24G151	Capacitor, 22 pF, ±5%, 500V, NPO, Disc
C8	24G208	Capacitor, 150 pF, ±10%, 500V, Z5F Disc
C11	24G59	Capacitor, .05 uF, Discap
C14, 15	24G77	Capacitor, 20 pF, ±5%, 500V, NPO, Disc
C16, 22, 28	24G384	Capacitor, 2.2 uF, ±20%, 50V, Lytic
C17	24G207	Capacitor, .01 uF, +80, −20%, 100V, Disc
C18	24G223	Capacitor, .15, 10%, Disc
C19	24G444	Capacitor, 33pF, 2 KV, Discap, N750
C20	24G432	Capacitor, 220 pF, ±2.5%, 630V, Poly
C21	24G176	Capacitor, 47 pF, ±5%, 500V, NPO, Disc
C26, 27, 29, 30	24G216	Capacitor, .1 uF, Mylar
C31	24G407	Capacitor, 47 uF
L1	46G81	Coil, 56 uH, 5%, Coilcraft type 4
L2-5	41G8	Relay, 4V, Form 1A SPST

POWER SUPPLY (900 BOARD)

	143B240	P.C. board, power supply, complete assembly
IC1	69G85	IC, LM340T5, +5V, 1 Amp Reg
IC2, 3, 8	69G105	IC, 78M15, +15V, .5 Amp Reg
IC4, 9, 11	69G106	IC, 79M15, −15V, .5 Amp Reg
IC5	69G141	IC, 79M20, −20V, .5 Amp Reg
IC10	69G187	IC, 78L15, +15V, .1 Amp Reg
TR1	19A33-1	Transistor, 2N3904, NPN
TR2	19A34-1	Transistor, 2N3906, PNP
TR3	19A22	Transistor, 2N3877A, NPN, VCB=VCE=85V
TR4	19A29-2	Transistor, MJE181, NPN, Power VCEO=60V
CR1-4	16G14	Diode, 3 Amp
CR5	50C4-10	Diode, 36V, Zener, 1N4753
CR6, 7	50C5-2	Diode, 1N4148
CR8	16G5	Diode, 1 Amp, 800V, PIV, 1N4006
CR9-19, 24-28, 30	16S10	Diode, 1 Amp, 400V, PIV, 1N4004
CR23, 29	16G18	Diode, 1 Amp, 1000V, PIV, 1N4007
CR31	16G17	Diode, 1.5 Amp, 800V, PIV, 1N5398
R8	14C27-1000	Resistor, ½W, .25%, 1 ohm
C1	24G422	Capacitor, 1000 uF, 100V, Lytic, Radial Lead
C2	24G202	Capacitor, 10 uF, +100, −10%, 25V, Lytic
C3, 25	24G384	Capacitor, 2.2 uF, ±20%, 50V, Lytic
C4	24G413	Capacitor, 10,000 uF, 10V, Lytic
C5, 12, 21	24G411	Capacitor, 220 uF, 40V, Lytic
C6-9, 13, 22, 24, 26-28	24G104	Capacitor, 0.1 uF, +80, −20%, 100V, Disc
C10, 11	24G424	Capacitor, 2200 uF, 25V, Lytic, Radial Lead
C18	24G421	Capacitor, 100 uF, 450V, Lytic
C19	24G408	Capacitor, 330 uF, 40V, Lytic
C20	24G410	Capacitor, 220 uF, 25V, Lytic

DRIVE BOARD (1000 BOARD)

	143B241	P.C. board, drive board, complete assembly
IC1	69G119	IC, HCPL-2530, Opto-isolator
TR1, 3, 4	19A34-1	Transistor, 2N3906, PNP
TR2, 5-10	19A33-1	Transistor, 2N3904, NPN
TR11	19A43	Transistor, MPS4356
TR12	19A29-2	Transistor, MJE181, NPN, Power, VCEO=60V
TR13	19A30-3	Transistor, MJE172, PNP, Power
TR14, 15	19A23-5	Transistor, D40V6
TR16, 17	19A51	Transistor, MJE350, PNP, 300V, 20W
CR1, 2	50C5-2	Diode, 1N4148
CR3, 4	50C4-21	Diode, 39V, Zener
CR5	50C4-11	Diode, 15V, Zener
CR6	16S11	Diode, 1 Amp, 600 PIV
CR7	50C4-4	Diode, 2V, Zener

ManualsPlus.com

SCHEMATIC REFERENCE	PART NO.	DESCRIPTION
R6	15C7-31	Resistor, Pot, 2.5 K, 30%, Vert Mtg
R11, 16, 44	15C7-14	Resistor, Pot, 5 K, Vert P.C. mount, Trimmer
R35, 36	14A52-18	Resistor, 10W, 10%, 10.0 K ohm, WW
R38	14C91-9802	Resistor, 1.5W, 1.0%, 980 K ohm, WW
C1, 6, 12, 15	24G104	Capacitor, 0.1 uF, +80, −20%, 100V, Disc
C14, 18	24G448	Capacitor, 10 uF, 35V, Lytic
C3, 5	24G437	Capacitor, 470 uF, 25V, Lytic
C4, 13, 17, 24, 25, 26	24G207	Capacitor, .01 uF, +80, −20%, 100V, Disc
C8, 27	24G86	Capacitor, 10 pF, ±10%, 500V, NPO, Disc
C9-11	24G384	Capacitor, 2.2 uF, ±20%, 50V, Lytic
C19	24G443	Capacitor, 20 uF, 450V, Non-Polar Radial
C21, 22	24G430	Capacitor, 4.7 uF, 450V, Lytic, Radial Lead
C23	24G152	Capacitor, 68 pF, ±10%, 500V, Disc
C2, 7, 16	24G382	Capacitor, 10 uF, 16V, Lytic
C28	24G299	Capacitor, 100 pF, 20%, 600V
MOV1	33G251	Varistor, 390V, 10%
MOV2	33G260	Varistor, 430V, ±10%
L1	46A61	Coil, 33 uH, P.C. Mtg
L2	41G8	Relay, 4V, Form 1A SPST

VIDEO GENERATOR (1100 BOARD)

	143B242	P.C.board, video generator, complete assembly
IC1, 12, 22	69G45-B	IC, 4017, decade counter
IC2	69G104	IC, 79L12, −12V, Reg
IC3	69G111	IC, 5321, Camera Sync Gen
IC4, 7, 10, 17, 20, 29	69G37	IC, 74LS00, Quad, NAND gate
IC5, 14	69G6-B	IC, 4040, CMOS, 12 stage counter
IC6, 9	69G31	74LS74, Dual D flip-flop
IC8, 21, 24	69G109	IC, 74LS10, Triple 3-input NAND gate
IC11, 18, 23	69G87	IC, 74LS02, Quad, Two input NOR gates
IC13, 33	69G3-B	IC, 4011, Quad, 2 input NAND
IC15, 26, 28	69G103	IC, 74LS251, Data selectors/MUX
IC16, 19	69G5-B	IC, 4024, 7 stage binary counter
IC25	69G86	IC, 74LS393, Dual 4 bit counter
IC27	69G110	IC, 74150, 1 of 16 data selectors
IC30	69G88	IC, DAC08, 8 bit DAC
IC32	69G3-A	IC, 4011, Quad, 2 input NAND
IC31	69G63	IC, TL081, Bi-FET Op Amp
IC34	69G7-B	IC, 4001, Quad, Two input NOR Gates
TR1-3, 6, 10, 11, 13-17	19A33-1	Transistor, 2N3904, NPN
TR4	19A7-1	Transistor, SE3002, 2N3563
TR5, 7, 8	19A34-1	Transistor, 2N3906, PNP
CR1-14	50C5-2	Diode, IN4148
R24	14A38-4702	Resistor, ¼W, 1%, 470 ohm
R26	14A38-2702	Resistor, ¼W, 1%, 270 ohm
R30, 39	14A38-1003	Resistor, ¼W, 1%, 1 K ohm
R31	14A38-4703	Resistor, ¼W, 1%, 4.7 K ohm
R32	14C38-1202	Resistor, ¼W, 1%, 120 ohm
R33	14A38-3303	Resistor, ¼W, 1%, 3.3 K ohm
R38	14A38-5603	Resistor, ¼W, 1% 5.6 K ohm
R5	15C26-2	Resistor, Mini Pot, 200 Ohm Cermet
R20	15B22-5	Resistor, Pot, 1 K, 20%, Mini P.C. Mtg
R25, 40	15B22-4	Resistor, Pot, 5 K, 20%, Mini P.C. Mtg
R44	15C26-4	Resistor, Pot, 1 K, Mini P.C. Mtg
R46	15C7-14	Resistor, Pot, 5 K, Vert P.C. Mount Trimmer
R64	15C22-7	Resistor, Pot, 50 K, 20%, Mini P.C. Mtg
R72	15C22-6	Resistor, Pot, 25 K ohm
C1, 11, 12, 16, 18, 19, 25-27	24G299	Capacitor, 100 pF, 20%, 500V
C2	24G74	Capacitor, .0015 uF, ±20%, 600V, Disc
C3, 10, 13, 21, 22, 32-34	24G207	Capacitor, .01 uF, +80, −20%, 100V, Disc
C4, 5	24G208	Capacitor, 150 pF, ±10%, 500V, Z5F, Disc
C6	24G49	Capacitor, 390 pF, 10%, 600V, Disc
C7	24G384	Capacitor, 2.2 uF, ±20%, 50V, Lytic
C8	24G177	Capacitor, .015 uF, ±20%, 1 KV Disc
C14, 17	24G85	Capacitor, 15 pF, ±10%, 500V, NPO Disc
C15	24G25	Capacitor, 220 pF, ±20%, 600V, Disc

ManualsPlus.com

SCHEMATIC REFERENCE	PART NO.	DESCRIPTION
C20, 24	24G382	Capacitor, 10 uF, 16V, Lytic, Radial Lead
C28	24G317	Capacitor, 36 pF, 5%, 500V, Disc
C29	24G86	Capacitor, 10 pF, ±10%, 500V, NPO, Disc
C30	24G347	Capacitor, 3-20 pF, Trimmer Tubular
L1	41G9	Relay, 5V, SPDT, EAC#MIC5A
Y1	47A25	Crystal, 3.563795 MHz (matched to 47A38)

.5 MHz GENERATOR (1200 BOARD)

	143B243	P.C. board, .5 MHz Gen., complete assembly
IC2, 3, 5, 6, 8, 10, 13-15	69G31	IC, 74LS74 Dual D Flip-Flop
IC4, 11, 12, 18	69G61	IC, 74LS08, Quad AND Gate
IC9, 17	69G37	IC, 74LS00, Quad NAND Gate
IC7	69G114	IC, 74LS03, Quad NAND/Open Collector
IC16	69G42	IC, 74LS90, Decade counter
IC19	69G113	IC, LM306, Voltage comp
TR1, 2, 4-8	19A33-1	Transistor, 2N3904, NPN
TR3	19A19	FET, MPF-102, N-Channel
TR9	19A29-1	Transistor, MJE180
CR1, 2	50C5-2	Diode, 1N4148
R4	15C22-4	Resistor, Pot, 5 K, 20%, Mini P.C. Mtg
R19	15C7-2	Resistor, 10 K, Pot
R33	15C7-3	Resistor, Pot, 500 ohm
C1	24G347	Capacitor, 3-20 pF, Trimmer Tubular
C2, 4, 10, 13, 16, 24, 27, 29, 33	24G207	Capacitor, .01 uF, +80, −20%, 100V, Disc
C3, 5	24G299	Capacitor, 100 pF, 20%, 600V
C6, 7, 8, 9, 28	24G83	Capacitor, 33 pF, ±10%, 500V, NPO Disc
C11, 12	24G95	Capacitor, 82 pF, Discap, ±10%, 500V
C14	24G317	Capacitor, 36 pF, 5%, 500V, Disc
C15	24G75	Capacitor, 27 pF, ±5%, 500V, Disc
C17, 18	24G442	Capacitor, 100 uF, +50, −10%, 16V, Lytic, Radial Lead
C19, 21	24G207	Capacitor, .01 uF, +80, −20%, 100V, Disc
C20, 22	24G407	Capacitor, 47 uF, 25V, Lytic
C23, 25, 30, 31	24G382	Capacitor, 10 uF, 16V, Lytic, Radial Lead
C26	24G118	Capacitor, 100 uF, Electrolytic
C32	24G192	Capacitor, 47 pF, 10%, 100V, Disc
C34	24G193	Capacitor, 9 pF, Disc
L1, 2	46G109	Coil, 6 MHz Tripler
L4, 5	46G81	Coil, 56 uH, 5%, Coilcraft type 4
Y1	47A30	Crystal, 12.2727 MHz Xtal (matched to 47A25)

30 Hz/3.58 MHz DRIVE (1300 BOARD)

	143B244	P.C. board, 30 Hz, 3.58 MHz Drive, complete assembly
TR1-7	19A33-1	Transistor, 2N3904, NPN
TR8	19A34-1	Transistor, 2N3906 PNP
CR1	16S10	Diode, 1 Amp, 400V, PIV, IN4004
TH1	33G261	Switching Thermister, PTC
C1, 3	24G207	Capacitor, .01 uF, +80, −20%, 100V, Disc
C2	24G152	Capacitor, 68 pF, Discap, NPO, ±10%, 500V
C4-6	24G384	Capacitor, 2.2 uF, ±20%, 50V, Lytic
C7	24G17	Capacitor, .001 uF, +100, −0%, 500V, Disc
	24A148	Capacitor, .001 uF, 500V Feedthru
	24G194	Capacitor, 13 pF, Feedthru
MOV1	33G262	47V, MOV, V47ZA7 or equiv.
L1	46G81	Coil, 56 uH, 5%, Coilcraft type 4

45.75 MHz OSCILLATOR (1400 BOARD)

	143B245	P.C. board, 45.75 MHz oscillator, complete assembly
TR1, 2	19A7-1	Transistor, SE3002, 2N3563
CR1-3	50C5-2	Dilde, 1N4148
C1, 5, 6	24G207	Capacitor, .01 uF, +80, −20%, 100V, Disc
C2	24G72	Capacitor, 4 pF, Discap, NPO, ±.4 pF, 500V
C3	24G77	Capacitor, 20 pF, ±5%, 500V, NPO, Disc
C4	24G154	Capacitor, 6 pF, 5%, 500V, Disc. NPO
C7, 8, 10	24G83	Capacitor, 33 pF, ±10%, 500V, NPO, Disc

ManualsPlus.com

SCHEMATIC REFERENCE	PART NO.	DESCRIPTION
C9	24G17	Capacitor, .001 uF, +100, −0%, 500V, Disc.
C12	24G194	Capacitor, 13 pF, Feedthru
C11, 13	24G148	Capacitor, .001 uF, 500V, Feedthru
L1	46G86	Coil, Adj. .34-.49 uH
L2	46G83	Coil, .33 uH, ±5%, Type 4
Y1	47G7	Crystal, 45750 KHz

512 MHz OSCILLATOR, (1500 BOARD)

	143B246	P.C. board, 512 MHz Oscillator, complete assembly
TR1	19A42	Transistor, MPSH 11 high freq, NPN
CR1	50C11-6	Diode, Varicap, Type BB105B
C1, 5	24G207	Capacitor, .01 uF, +80, −20%, 100V, Disc
C2	24G440	Capacitor, 12 pF, ±10%, 50V, Chip
C3	24G439	Capacitor, 8.2 pF, ±10%, 50V, Chip
C4	24G438	Capacitor, 10 pF, ±10%, Chip

UHF OSCILLATOR (1600 BOARD)

	143B247	P.C. board, UHF Oscillator, complete assembly
TR1	19A48	Transistor, MMBTH24, NPN, SOT 23 Pkg
CR1	50C11-6	Diode, Varicap, Type BB105B
C1, 5, 6	24G419	Capacitor, 1000 pF, 100V, Chip
C2	24G416	Capacitor, 2.7 pF, 100V, Chip
C3	24G417	Capacitor, 5.6 pF, 100V, Chip
C4	24G418	Capacitor, 15 pF, 100V, Chip

ATTENUATOR (1700 BOARD)

	143B248	P.C. board Attenuator, complete assembly
CR1-11	50B13-3	Diode, Pin KSW, # KS8379
R7, 13	14C38-3602	Resistor, ¼W, 1%, 360 ohm
C1, 3, 4, 6, 7, 9-16, 18-20	24G368	Capacitor, 1000 pF, ±10%, 100V, Ceramic Chip
C2	24G207	Capacitor, .01 uF, +80, −20%, 100V, Disc
C5, 8, 17	24G431	Capacitor, .22 uF, +80, −20%, 50V, Ceramic
L1	46G33	Coil, 3 uH
L2-5	46G103	Coil, 100 uH
L6	46G89	Coil, 9 turns, 1/8 dia, .159 uH
FB1, 2	46G38	Ferrite Bead, Amidon #64-101

RF (1800 BOARD)

	143B249	P.C. board, RF, complete assembly
IC1	69G137	IC, DM350, +18 dB Amp, 40-860 MHz
IC2	69G85	IC, LM340T5, +5V, 1 Amp Reg
IC3	69G108	IC, 79L15, −15V, .1 Amp Reg
IC4	69G39	IC, 10216, ECL, Triple line receiver
IC5	69G54	IC, 74S196, 100 MHz, Decade counter
IC6	69G117	SN72733, Differential video amp
IC7	69G116	IC, 79L05, −5V, .1 Amp Reg
IC8, 9	69G115	IC, U264B, /64 UHF Prescaler
IC10	69G31	IC, 74LS74, Dual D flip-flop
IC11	69G122	IC, MC4044, Phase Comp/Charge Pump
IC12	69G63	IC, TL081, Bi-FET Op Amp
TR1, 3-5, 10, 11, 13	19A34-1	Transistor, 2N3906, PNP
TR2, 6-8, 12	19A33-1	Transistor, 2N3904, NPN
TR9	19A13-1	Transistor, 2N3866
CR1-3, 11, 12, 14	50C5-2	Diode, 1N4148
CR4-6	50B13-3	Diode, Pin, KSW, #KS8379
CR7-10	50G20	Diode, 1N3605
C1-3, 5, 8, 9, 11, 12, 40, 41	24G368	Capacitor, 1000 pF, ±10%, 100V, Ceramic Chip
C13, 16, 27, 33, 34, 43	24G299	Capacitor, 100 pF, 20%, 600V
C6, 19, 35	24G382	Capacitor, 10 uF, 16V, Lytic, Radial Lead
C14	24G85	Capacitor, 15 pF, ±10%, 500V, NPO, Disc
C15	24G190	Capacitor, 180 pF, ±5%, 500V, Disc
C17, 20, 36, 42	24G104	Capacitor, 0.1 uF, +80, −20%, 100V, Disc

ManualsPlus.com

SCHEMATIC REFERENCE	PART NO.	DESCRIPTION
C7, 10, 18, 21, 23, 24, 31, 32	24G17	Capacitor, .001 uF, +100, −0%, 500V, Disc
C37	24G384	Capacitor, 2.2uF, ±20%, 50V, Lytic
C4, 22, 25, 28-30, 44-48	24G207	Capacitor, .01 uF, +80, −20%, 100V, Disc
C49, 54	24A254-2	Capacitor, 1000 pF, Feedthru ½''
C38, 56	24G448	Capacitor, 10 uF, 35V, Lytic Cap
C39	24G120	Capacitor, 10 uF, 15V, Lytic Cap
C55	24G152	Capacitor, 68 pF, Discap
L1	46G89	Coil, 9 Turns, 1/8 Dia, .159 uH
L2, 3	46G103	Coil, 100 uH
L4	46G69	Coil, 4.7 uH
L5	46G81	Coil, 56 uH
FB1,2	46G98	Ferrite Bead, Amidon #64-101
MX1	33G255	Mixer, 1000 MHz

METER/RINGER POWER SUPPLY (1900 BOARD)

	143B251	P.C. board, meter/ringer power supply, complete assembly
IC1	69G70	IC, 78M05UC, +5V, .5 Amp Reg
IC2	69G127	IC, 78L12, +12V, .1 Amp Reg
IC3	69G104	IC, 79L12, −12V, .1 Amp Reg
CR1-6	16S10	Diode, 1 Amp, 400V, PIV, IN4004
C1	24G423	Capacitor, 3300 uF, 16V, Lytic, Radial Lead
C2, 3	24G410	Capacitor, 220 uF, 25V, Lytic
C4-6	24G104	Capacitor, 0.1 uF, +80, −20%, 100V, Disc

UP/DOWN SWITCH (2000 BOARD)

	143B263	P.C. board, up/down switch, complete assembly
R4,5	15C22-2	Resistor, Pot, 10 K ohm, 20%, Mini P.C. Mtg
	25A324	Switch, momentary, push button (w/o knob)

DRIVE SIGNAL (2100 BOARD)

	143B265	P.C. board, Drive Signal, complete assembly
R1, 3, 7, 11	15C7-17	Resistor, Pot, 1 K ohm, 30%, Vert Mtg
R5, 6, 9	15C7-11	Resistor, Pot, 50 K ohm, linear taper, Vert Mtg
	25A313	Switch; Rotary, Drive Signal. (w/o knob)
	100G67	**Heatsink, Chassis Back Riveted Assembly**
TR1	19A24	Transistor, 2N3055 NPN Power, 15 Amp
	100G60	**RF Attenuator Assembly**
	24G382	Capacitor, 10 uF, 16V Lytic, Radial Lead.
C22, 27	24A148	Capacitor, .001 uF, 500V Feedthru
C21	24G194	Capacitor, 13 pF, Feedthru
	100G61	**DVM, Function Switch Assembly**
R8	14C27-1076A	Resistor, ½W, .25%, 1.07 M ohm
C11	24G221	Capacitor, .01 uF, +80%, −20%, 2 KV Discap
SW6	25A312	Switch; Rotary, DVM Function (w/o knob)
	100G62	**Meter Ringer Assembly**
	100G66	**Chassis, Main, Final Assembly**
CR1	20G28	LED, Flashing; use 20G14 Hardware
CR2	50C4-13	Diode, Zener IN4733A, 5.1V; 5%, 1W
R1, 5	15C1-47	Resistor, Pot, 10 K ohm, +/−10% linear taper, (Bias Supply) & (RF Level)
R2	15B15-5	Resistor, Pot, 500 ohm, +/−30%, Tab Mtg (dot size)
R3	15B8-6E	Resistor, Pot, 10 K, +/−30%, Linear Taper (30 Hz Drive)
R4	15C1-23	Resistor, Pot, 10 K, +/−30%, Linear Taper (3.58 MHz Drive)
R6	15C1-53	Resistor, Pot, 5 K, +/−10%, Linear Taper (Drive Level)
VR1, 11	33G251	Varistor, 390V, 10%, GE #390MA6B.
C1, 2	24G364	Capacitor, .0022 uF, +/−20%, 2 KV, Disc
C3	24G316	Capacitor, .1 uF, +/−20%, 600V Mylar
C4	24G271	Capacitor, 50 uF, +80%, −10%, 35V Lytic
C11	24G207	Capacitor, .01 uF, +80%, −20%, 100V, Disc
C5	24G441	Capacitor, .04 uF, +80%, −20%, 1 KV, Z5U Discap
L1,2	46G92	Coil, 50 uH
FB1-8	46G47	Ferrite Bead
SW1	25A310	Switch,Rotary, RF-IF Level
SW2	25A330	Switch, Rotary, Video Pattern Select

ManualsPlus.com

SCHEMATIC REFERENCE	PART NO.	DESCRIPTION
SW3	25A309	Switch, Rotary, Audio
SW4	25A314-E	Switch, Rotary, Drive Range
SW5	25A317	Switch, Rocker, lighted power
	125A256	**Switch, Rotary, Ringer Matching Assembly Complete**
C5	24G344	Capacitor, 47 pF, +/−10%, 160V, Poly
C6	24G279	Capacitor, 470 pF, +/−5%, 125V, Poly
C7	24G345	Capacitor, .002 uF, +/−10%, 160V, Poly
C8	24G403	Capacitor, .01 uF, +/−10%, 400V, Poly
C9	24G404	Capacitor, .033 uF, +/−10%, 200V, Poly
C10	24G401	Capacitor, .15 uF, +/−10%, 200V Poly
	25A256	Switch, Rotary, Ringer Matching
	28K84	Transformer, Power, VA62
F1, 3	44G28	Fuse, 1 Amp 3AG Slow Blo
F2	44G13	Fuse, 1/16 Amp 3AG, 250V

COMPLETE P.C. BOARD ASSEMBLIES

	143B232	P.C. board, LCD Display
	143B233	P.C. board, P.L.L.
	143B234	P.C. board, 10 BAR Interrupt
	143B235	P.C. board, Interlace/VIR Adder
	143B236	P.C. board, RF-IF Select
	143B237	P.C. board, Key Board
	143B238	P.C. board, Audio/4.5 MHz
	143B244	P.C. board, 30 Hz/3.58 MHz Drive
	143B245	P.C. board, 45.75 MHz Osc.
	143B249	P.C. board, RF
	143B263	P.C. board, Up/Down Switch
	143B265	P.C. board, Drive Signal

MISCELLANEOUS CABINET PARTS

8B281	Front Panel, Bezel, VA62
8B283	Escutcheon, Front Panel, Right
8B284	Escutcheon, Front Panel, Left
8B285	Escutcheon, Front Panel, Bottom
21A37	Knob, Alco# FK70B
21G45-B	Push Button (Hot Stamped)
21G51	Knob, with insert
21A80	Knob, black
21K81-1	Button, Black
22G65	Door Latch
26G292	Socket, for HDP-20 connector
26G293	Connector, 15 pin, type HDP-20
64A28	Fuse Holder

SUPPLIED ACCESSORIES

39G72	Balun, "F" in—leads out
39G106	Video Cable
39G159	Cable, "BNC" to "F"
39G160	Cable, Phono to Phono
39G161	Cable, "F" female to phono female
39G162	Cable, "F" Female to Phono Male
39G174-B	Test Lead, 72" Banana—Alligator, Black
39G174-R	Test Lead, 72" Banana—Alligator, Red
39G175-R	Test Lead and Probe Assembly, 72"
68G34	1/16" Allen Wrench
68G47	5/64" Allen Wrench
TP225	"Sure Hold" Probe

Components not listed are standard replacement parts and may be purchased locally. When ordering parts, please specify the instrument model number, schematic reference, part number, and description of the parts required. Parts orders will be shipped C.O.D. unless remittance accompanies order. Parts prices may be obtained by calling Service Department Parts at 605-339-0100. Minimum billing on parts orders is $5.00.

ManualsPlus.com

ACCESSORIES OUTPUT JACK

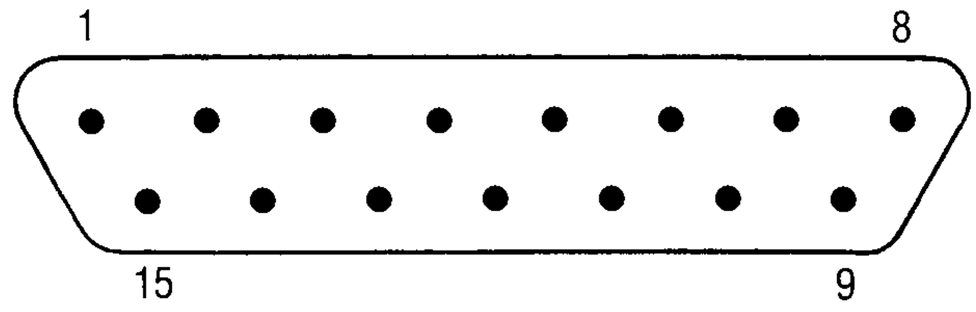

15 Pin ''D'' Connector

Pin#	Signal Present	Signal Amplitude
1.	ground	
2.	Horizontal drive, Pos. going.	4.5VP-P
3.	D.C.	+5V
4.	Color Burst Gate, Pos. going.	4VP-P
5.	Composite Video, Pos. going.	5VP-P
6.	Composite Sync, Pos. going.	5VP-P
7.	Composite Blanking, Neg. going.	5VP-P
8.	3.579545 MHz CW	4VP-P
9.	ground	
10.	30 Hz Square Wave	4VP-P
11.	D.C.	+15V
12.	D.C.	+30V
13.	D.C.	−15V
14.	Audio, (Audio Switch Selectable)	5VP-P
15.	N.C.	

ManualsPlus.com

TRANSISTOR SPECIFICATIONS AND BASING DIAGRAMS

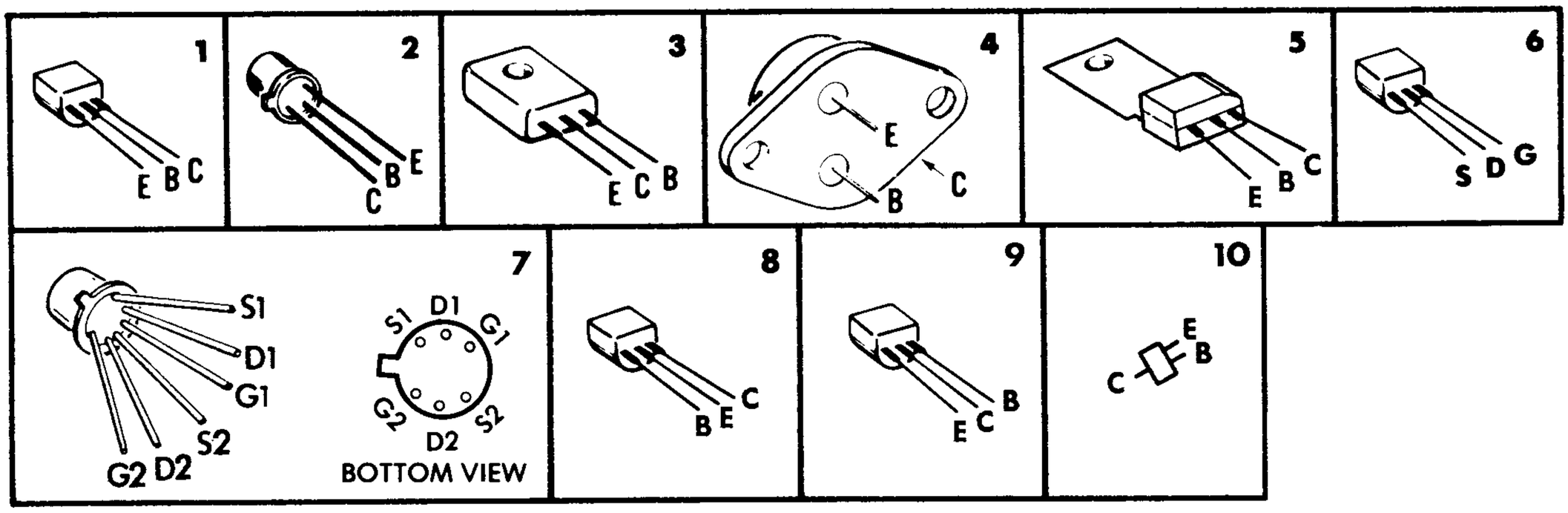

Sencore Part No.	Transistor No.	Basing	Polarity	*Beta/GM	Max I_{CBO}/I_{GSS}
19A7-1	2N3563	1	NPN	20-70	.05
19A13-1	2N3866	2	NPN	50-100	50
19A19	MPF-102	6	N-Channel	2000-7500	.002
19A22	2N3877A	9	NPN	300-450	.1
19A23-5	D40V6	5	NPN	75-110	.1
19A24	2N3055	4	NPN	20-70	300
19A29-1	MJE180	3	NPN	50-250	.1
19A29-2	MJE181	3	NPN	100-200	.1
19A30-3	MJE172	3	PNP	300-400	.1
19A31-1	2N3958	7	N-Channel	1000-3000	.0001
19A33-1	2N3904	1	NPN	100-300	.05
19A34-1	2N3906	1	PNP	100-300	.05
19A42	MPSH11	8	NPN	60	.1
19A43	MPS4356	1	PNP	200-400	50
19A48	MMBTH24	10	NPN	100-300	.0001
19A51	MJE350	3	PNP	150-200	100

*Tested with the Sencore TF46

IC PACKAGE DIAGRAMS

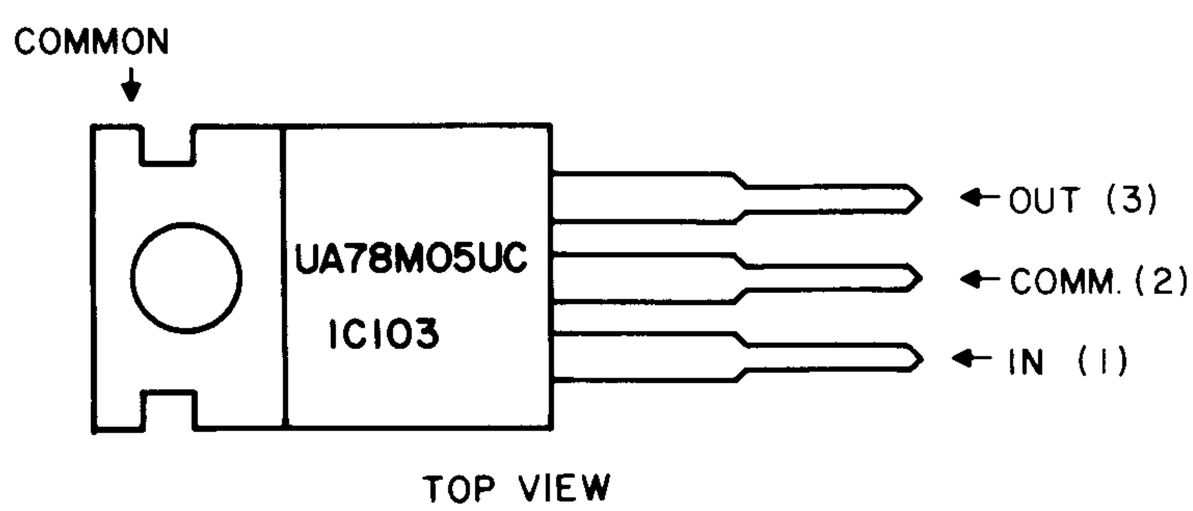

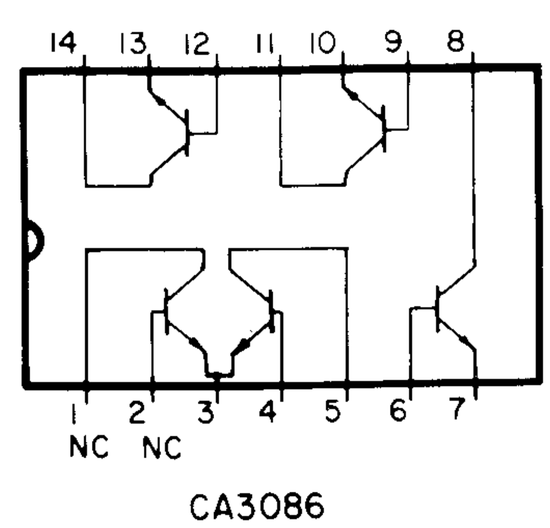

ManualsPlus.com

NOTES:

1. All resistances in ohms.
2. All capacitances greater than one are in pF, less than one in uF, unless otherwise indicated.
3. Board interconnection notes:
   - ☐ denotes a single push-on type connector.
   - ○ denotes wire soldered to PC board.
   - ◇ denotes molex connection. Numbers inside or along side indicate the pin number of the plug-in connector.
4. All controls, jacks, and displays on exterior of unit are shown with box around the name. ☐
5. Arrow on slider of controls indicates the clockwise rotation of the control.
6. All voltages shown on the schematic are referenced to the chassis ground (⏚) and are taken with a 0.1% DVM.
7. Ground connections (common)
   - denotes a connection to the VA62 chassis.
   - ⏚ denotes the power supply ground connection.
   - denotes a ground connection isolated from the chassis or Power Supply. All isolated ground connections are referenced to a particular circuit.
   - Example: is referenced to the Drive board.
8. All components shown in the shaded areas of the schematic are safety critical and must be replaced with the exact same part to insure continued safety of the instrument.

WARNING

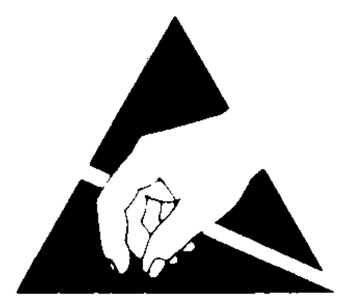

Avoid damage to parts caused by static electricity!

Most solid-state devices and film resistors are susceptible to damage due to discharge of static electricity. Observe the following precautions when a PC board is removed from the unit, or when handling components:

1. The person handling the part must be grounded through a 1 megohm resistor via a wrist strap or similar ground connection.
2. A PC board or component should never be placed on an insulated surface. The surface must be grounded (through a 1 megohm resistor) and conductive.
3. All replacement parts must be left in a completely enclosed, conductive container or package until ready for use. The person removing the part from the container must be properly grounded. All parts susceptible to static damage are shipped in conductive containers when ordered from the Sencore Service Department.

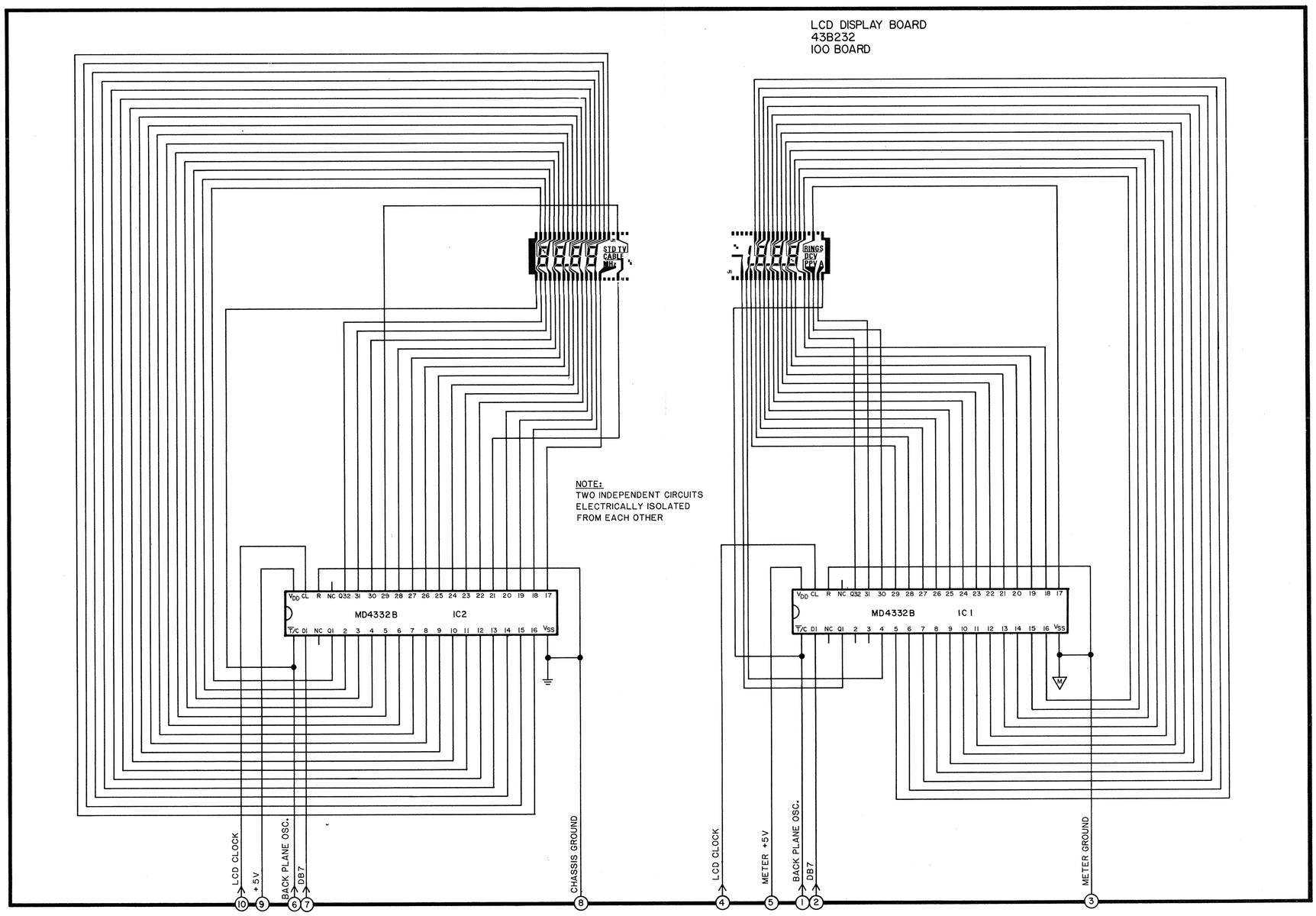

"100" LCD DISPLAY BOARD

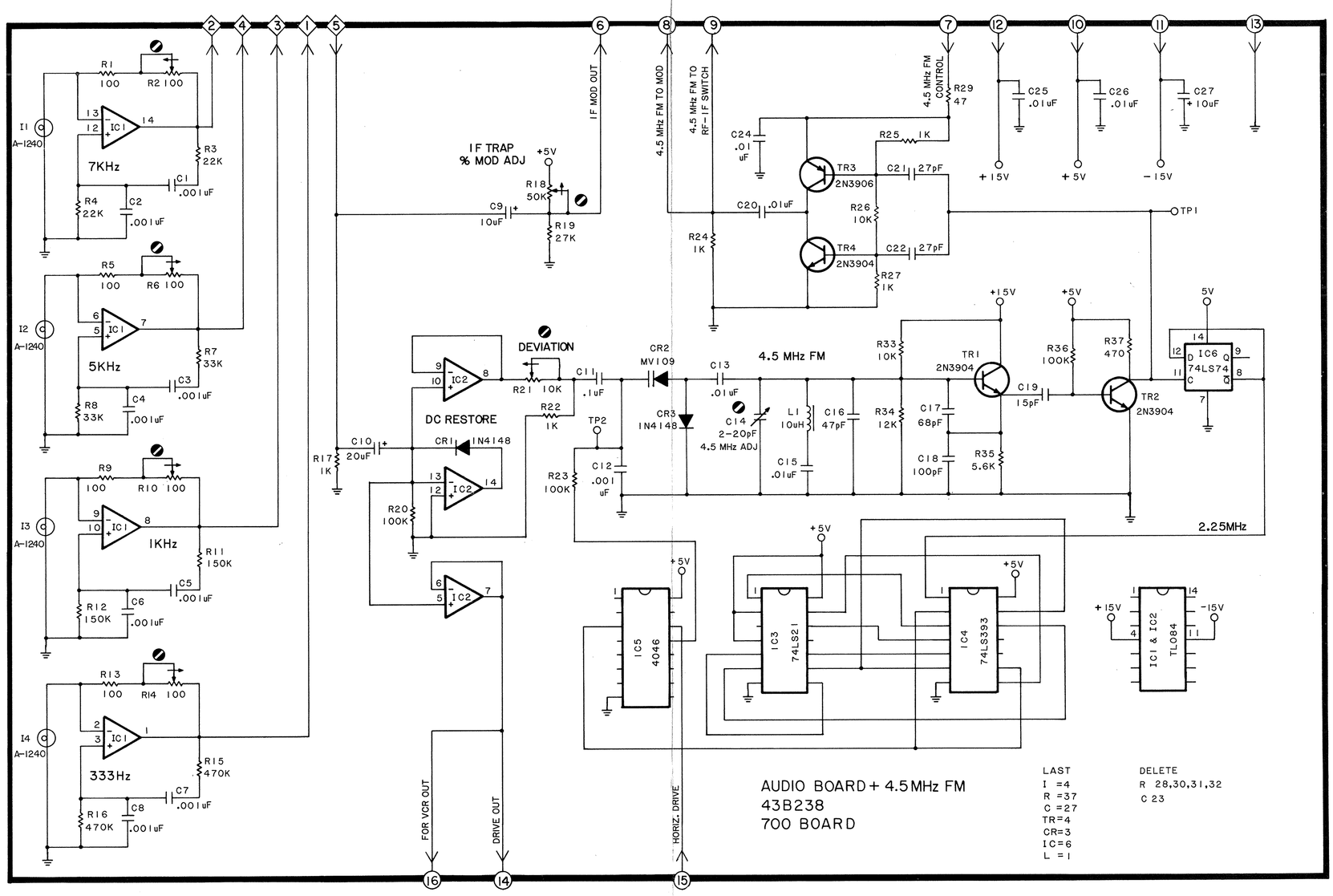

"700" AUDIO/4.5 MHz BOARD

Form 2193

This sheet includes board numbers 100, 700, 1300, 1400, 1700 and 1900.

SHEET 2

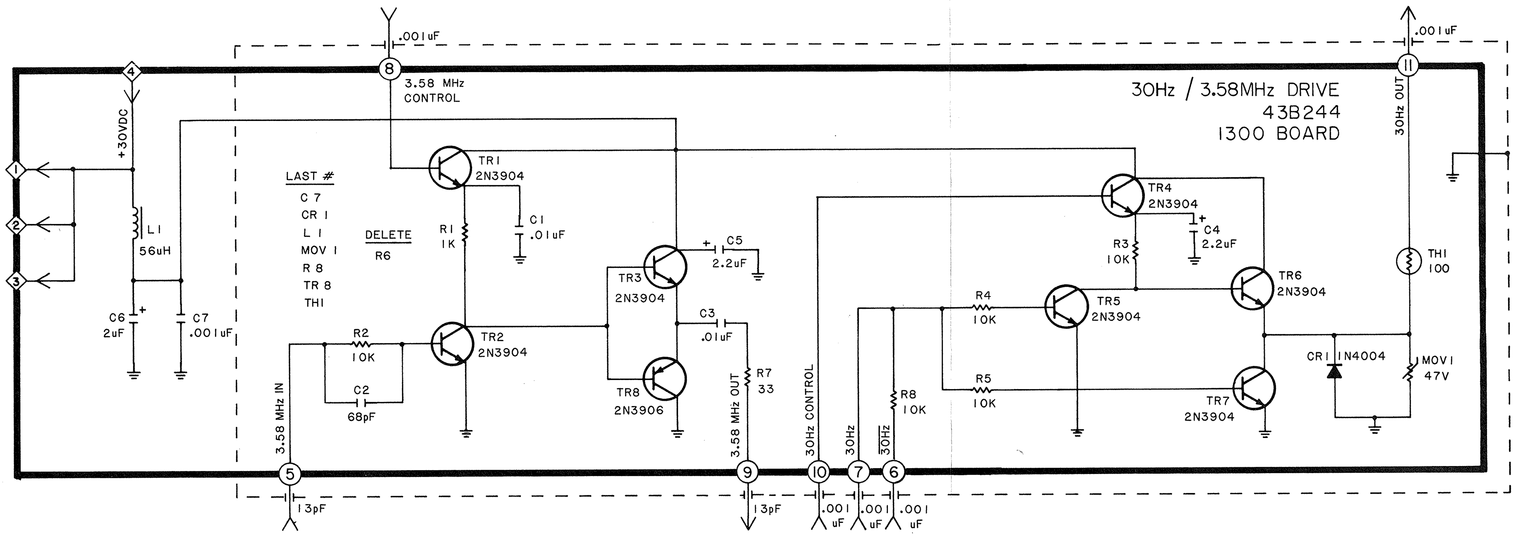

"1300" 30 Hz/3.58 MHz BOARD

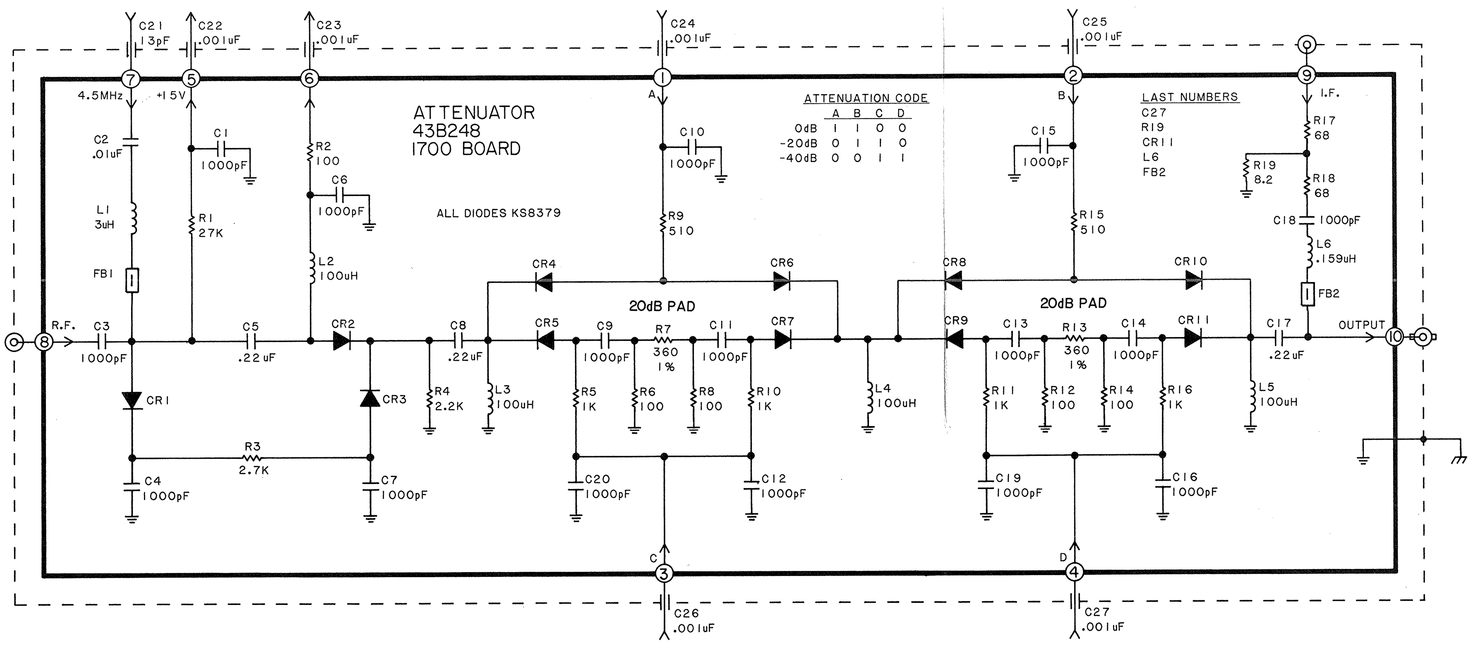

"1700" ATTENUATOR BOARD

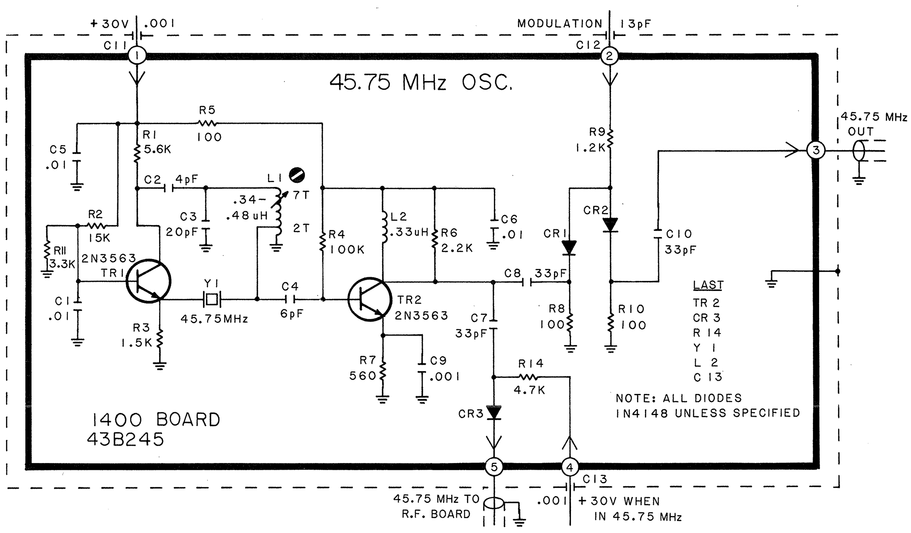

"1400" 45.75 MHz OSCILLATOR BOARD

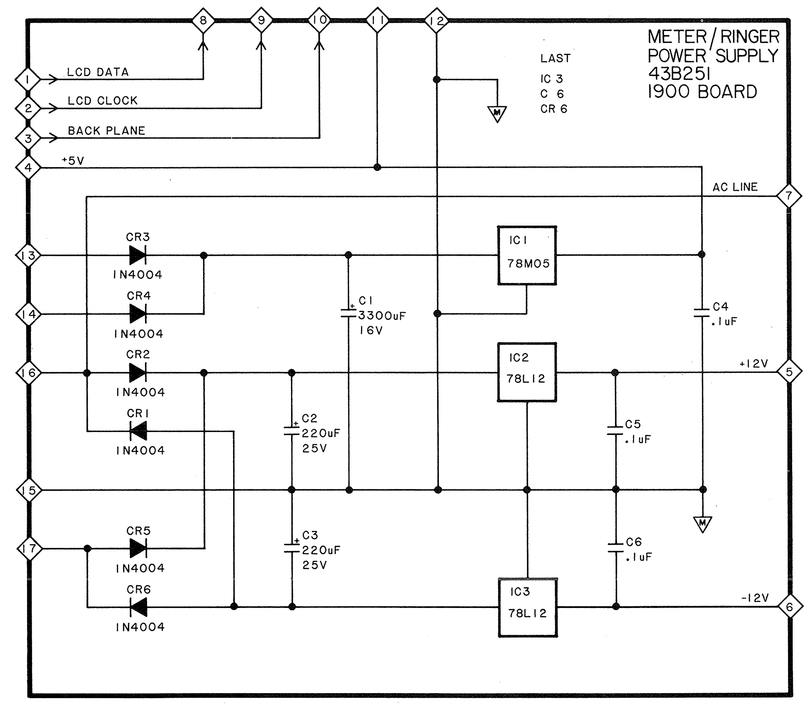

"1900" METER/RINGER POWER SUPPLY BOARD

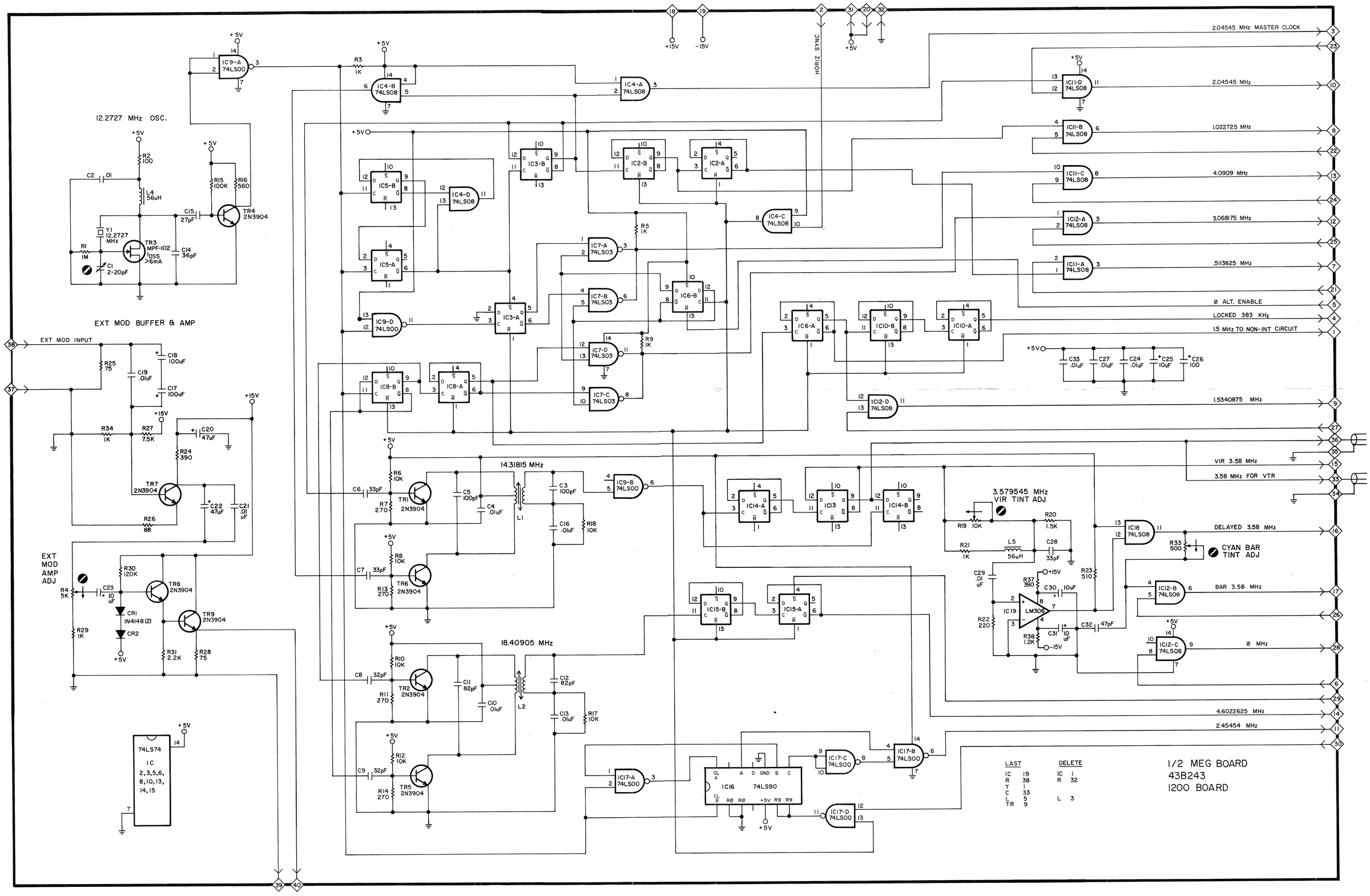

SHEET 3

This sheet includes board numbers 200 and 1200.

12.2727 MHz OSC.
EXT MOD BUFFER & AMP
EXT MOD INPUT
EXT MOD AMP ADJ
IC9-A 74LS00
IC4-B 74LS08
IC4-A 74LS08
IC4-C 74LS08
IC4-D 74LS08
IC11-D 74LS08
IC11-B 74LS08
IC11-C 74LS08
IC11-A 74LS08
IC12-A 74LS08
IC12-D 74LS08
IC12-B 74LS08
IC12-C 74LS08
IC7-A 74LS03
IC7-B 74LS03
IC7-C 74LS03
IC7-D 74LS03
IC9-D 74LS00
IC9-B 74LS00
IC17-A 74LS00
IC17-B 74LS00
IC17-C 74LS00
IC17-D 74LS00
IC16 74LS90
IC18
IC19 LM306
74LS74
IC 2,3,5,6, 8,10,13, 14,15
TR1 2N3904
TR2 2N3904
TR3 MPF-102 IDSS >6mA
TR4 2N3904
TR5 2N3904
TR6 2N3904
TR7 2N3904
TR8 2N3904
TR9 2N3904
Y1 12.2727 MHz
CR1 IN4148 (2)
CR2
14.31815 MHz
18.40905 MHz
3.579545 MHz VIR TINT ADJ
CYAN BAR TINT ADJ
HORIZ SYNC
2.04545 MHz MASTER CLOCK
2.04545 MHz
1.022725 MHz
4.0909 MHz
3.068175 MHz
.5113625 MHz
Ø ALT. ENABLE
LOCKED 383 KHz
1.5 MHz TO NON-INT CIRCUIT
1.5340875 MHz
VIR 3.58 MHz
3.58 MHz FOR VTR
DELAYED 3.58 MHz
BAR 3.58 MHz
Ø MHz
4.6022625 MHz
2.45454 MHz
+5V
+15V
-15V
LAST
IC 19
R 38
Y 1
C 33
L 5
TR 9
DELETE
IC 1
R 32
L 3
1/2 MEG BOARD
43B243
1200 BOARD

"1200" .5 MHz GENERATOR BOARD

Form 2193

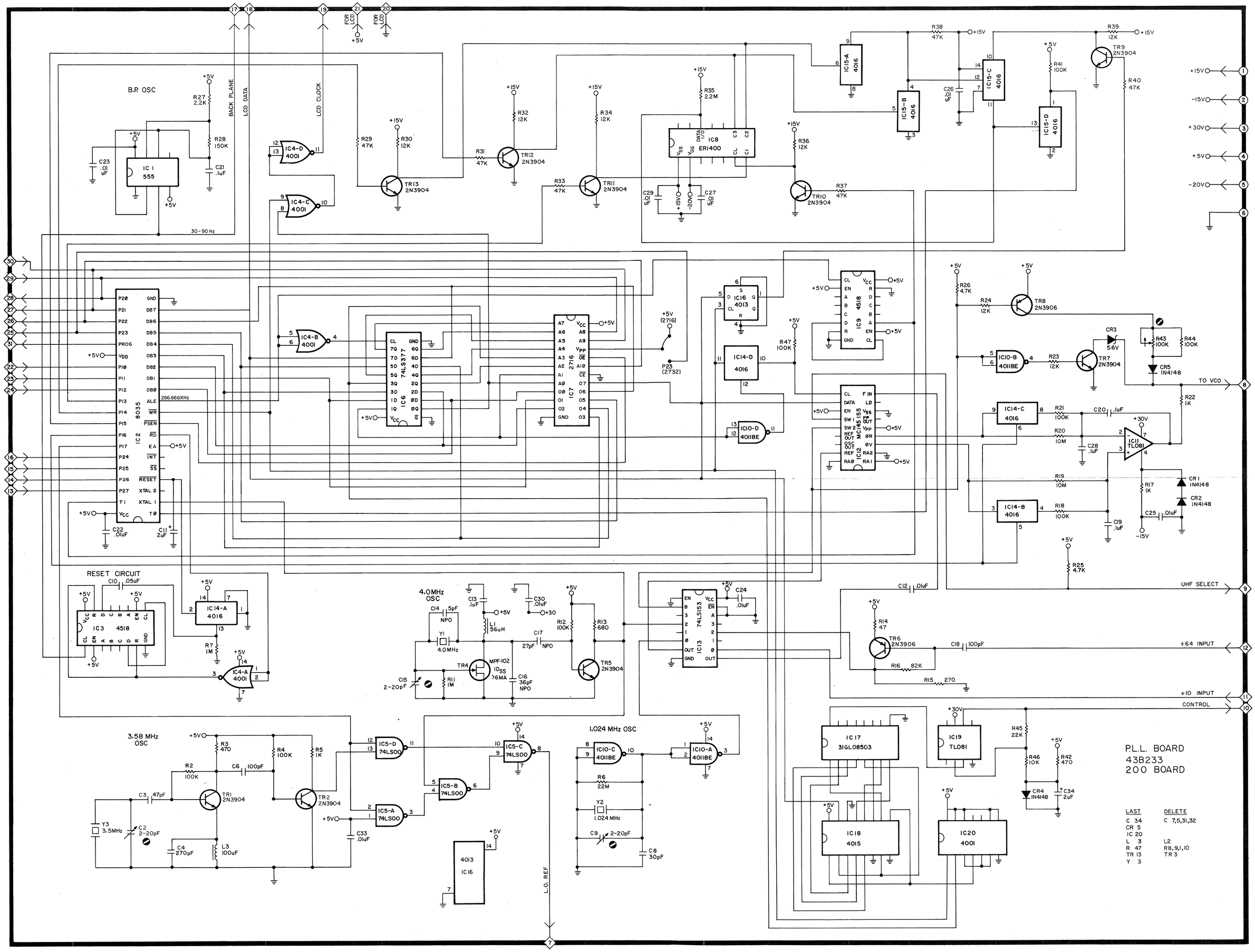

"200" P.L.L. BOARD

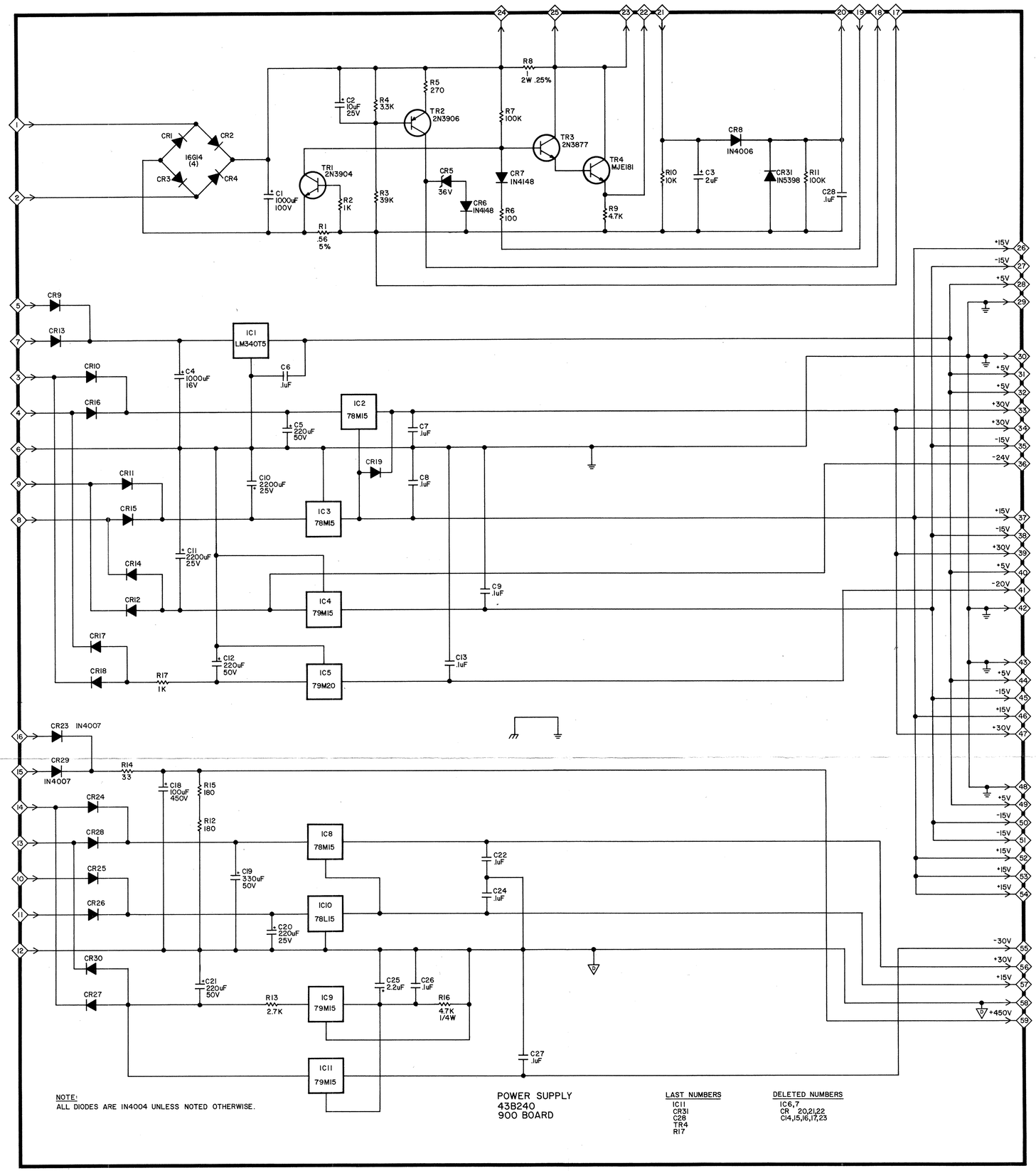

"900" POWER SUPPLY BOARD

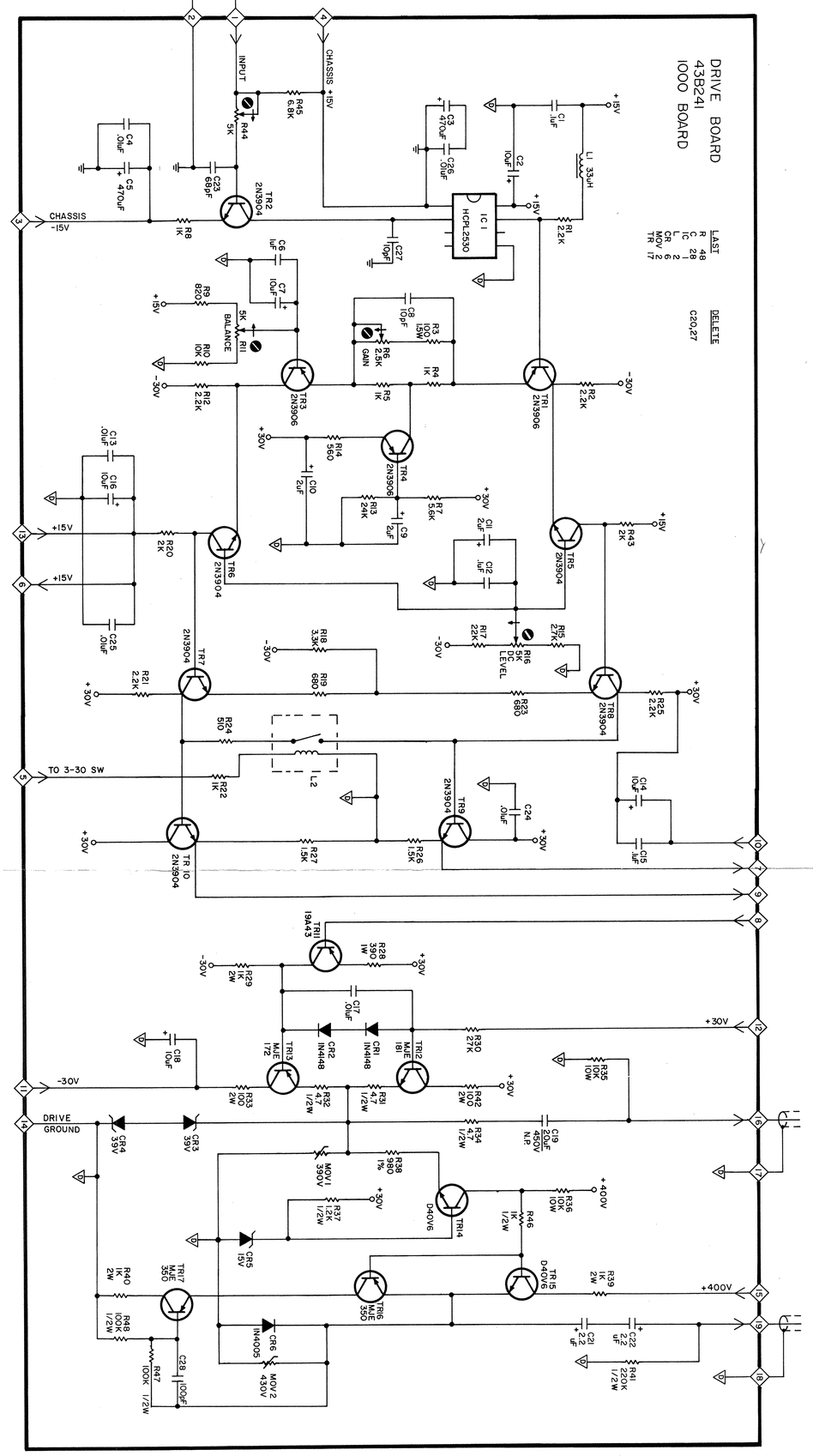

"1000" DRIVE BOARD

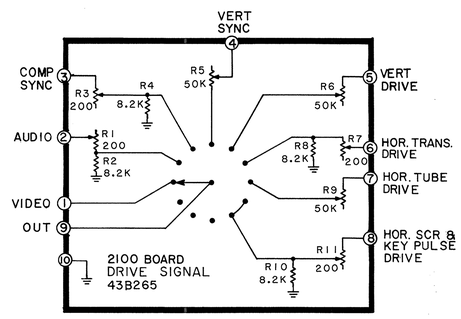

"2100" DRIVE SWITCH BOARD

Form 2193

This sheet includes block diagram and board numbers 900, 1000, and 2100.

SHEET 4

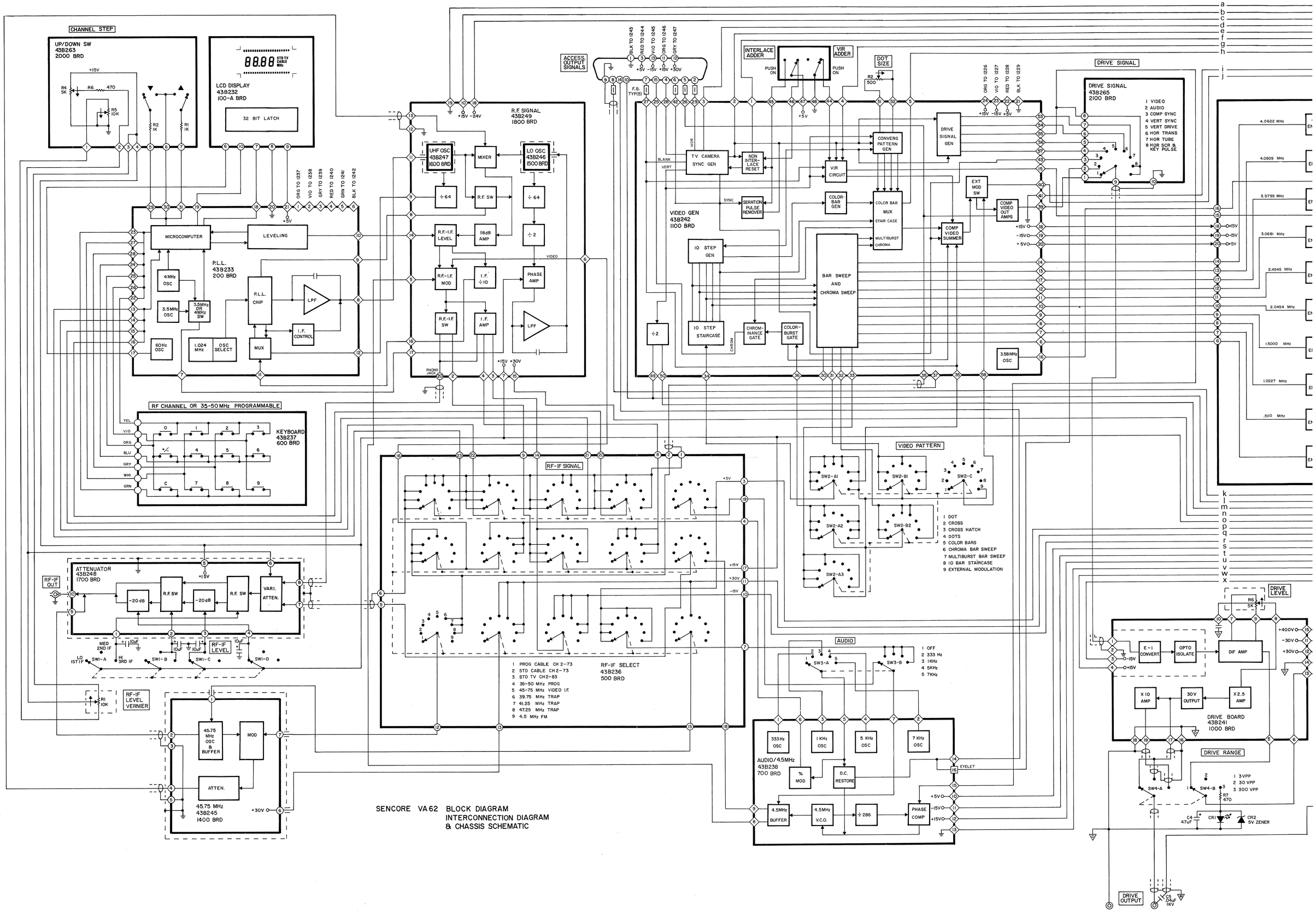

SENCORE VA62 BLOCK DIAGRAM
INTERCONNECTION DIAGRAM
& CHASSIS SCHEMATIC

VA62 BLOCK DIAGRAM
PART 1 OF 2

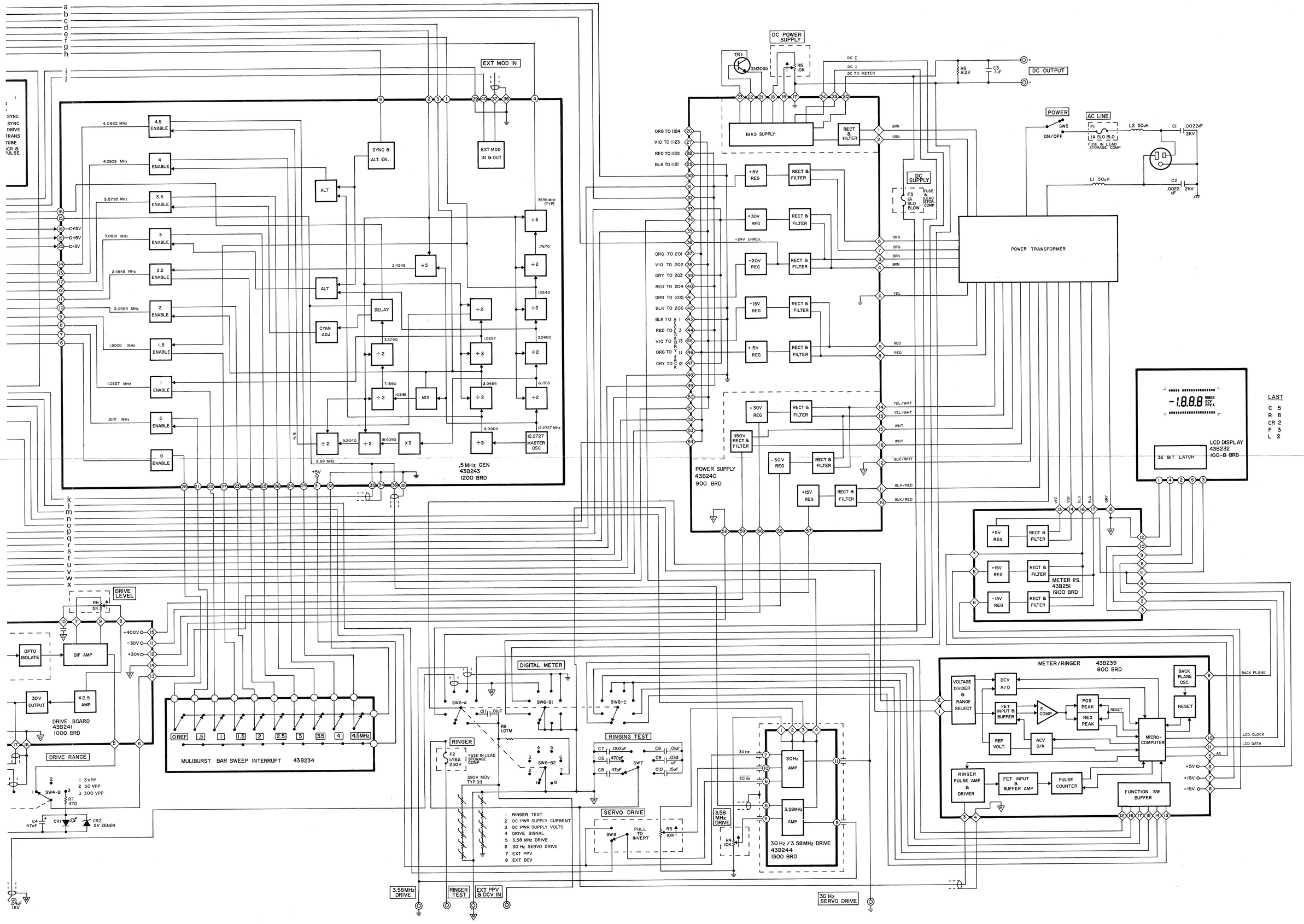

VA62 BLOCK DIAGRAM
PART 2 OF 2

Form 2193

This sheet includes block diagram and board number 1100.

SHEET 5

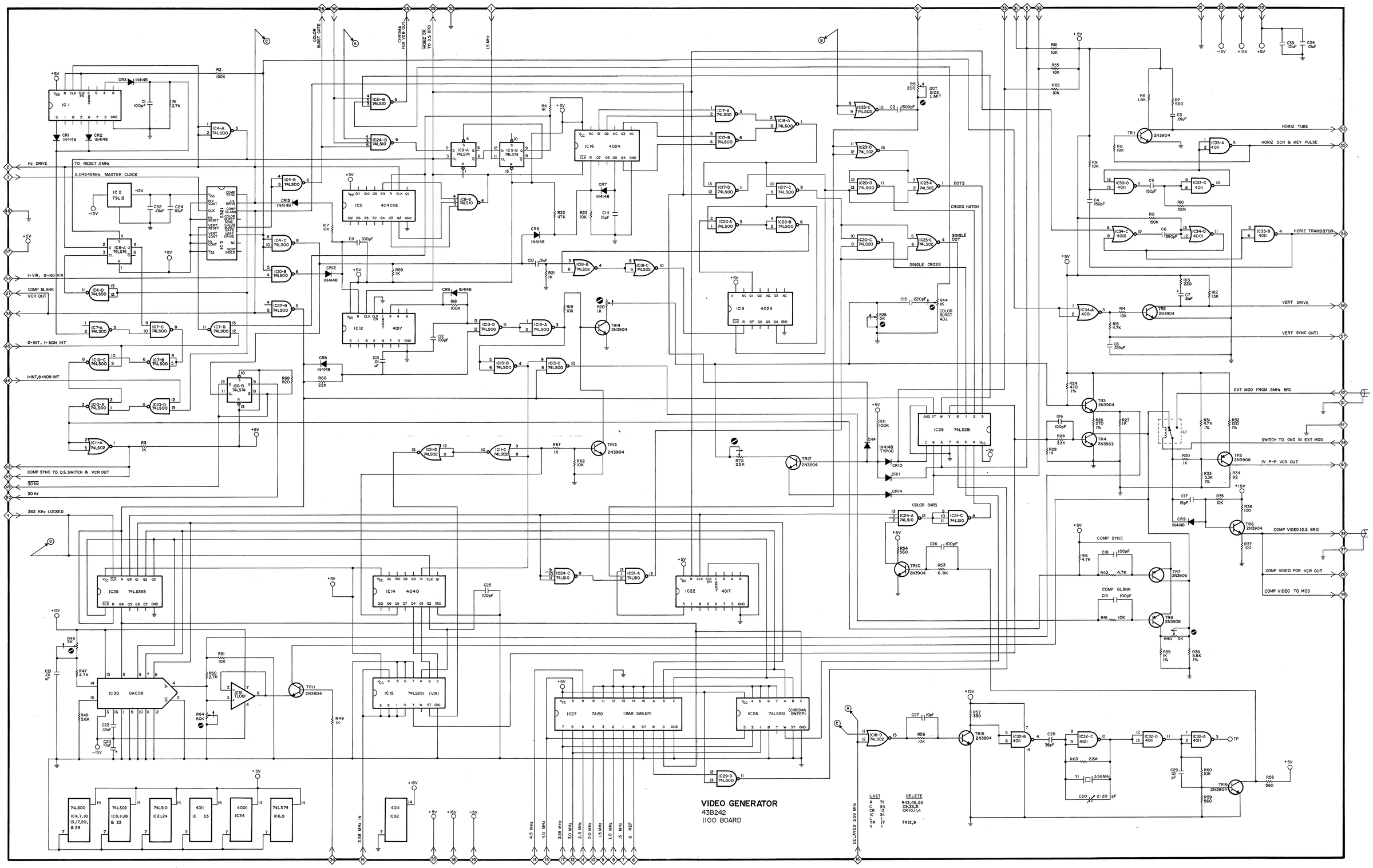

"1100" VIDEO GENERATOR BOARD

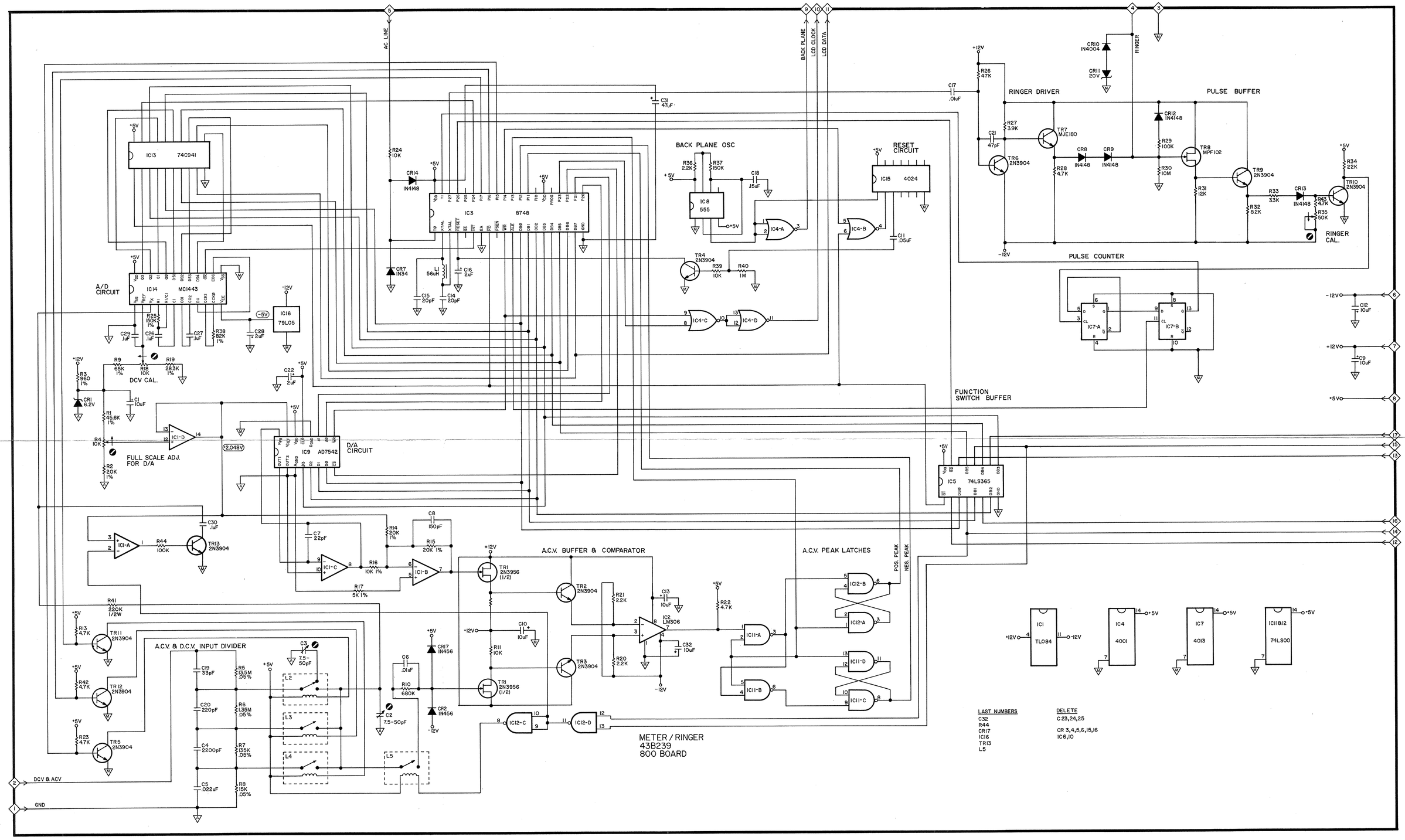

"800" METER/RINGER BOARD

This sheet includes board numbers 800 and 1800.

SHEET 6

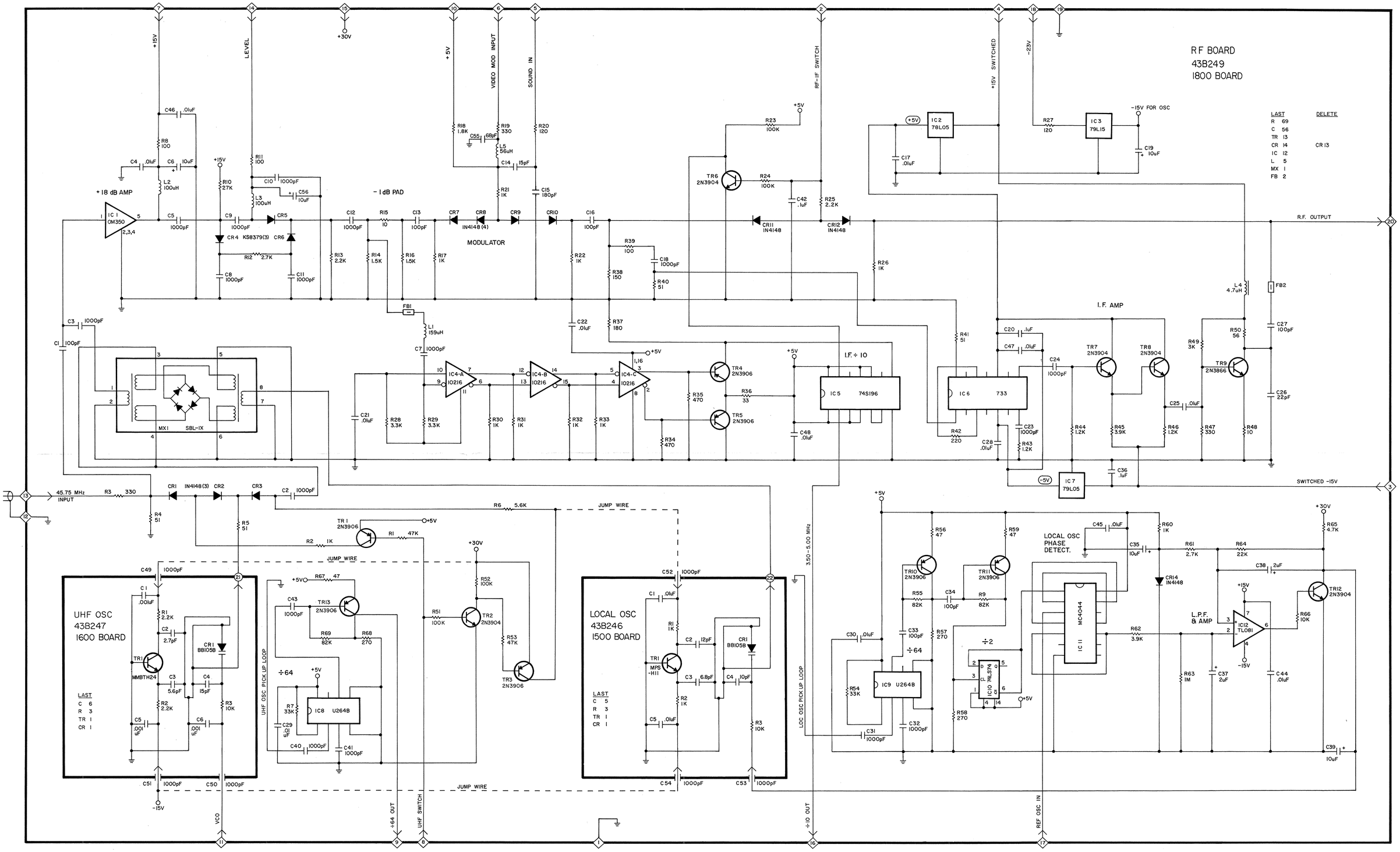

"1800" RF BOARD

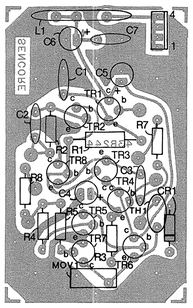

"1300" 30 Hz/3.58 MHz BOARD COMPONENT VIEW

"1500" 512 MHz OSCILLATOR BOARD COMPONENT VIEW

"1600" UHF OSCILLATOR BOARD COMPONENT VIEW

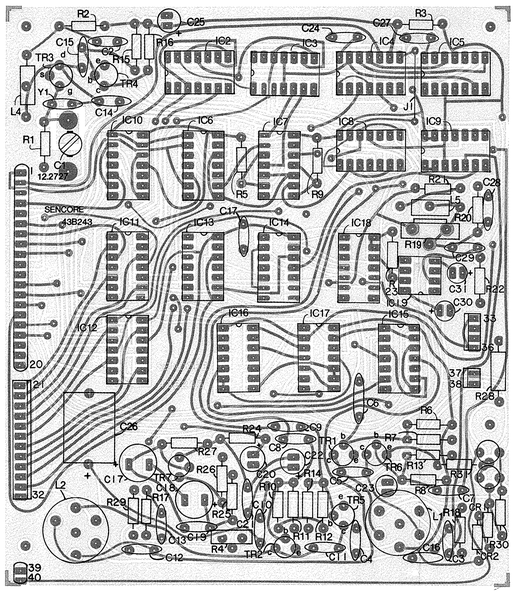

"1200" .5 MHz GENERATOR BOARD COMPONENT VIEW

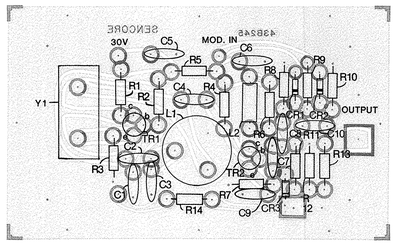

"1400" 45.75 MHz OSCILLATOR BOARD COMPONENT VIEW

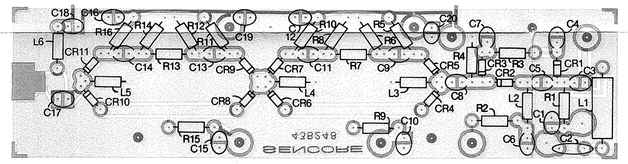

"1700" ATTENUATOR BOARD COMPONENT VIEW

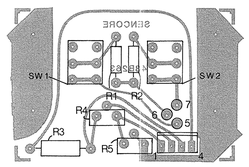

"2000" CHANNEL UP/DOWN BOARD COMPONENT VIEW

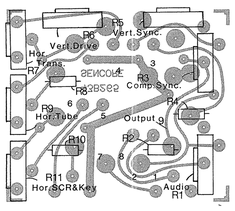

"2100" DRIVE SWITCH BOARD COMPONENT VIEW

NOTE: Pink foils, top side of board; grey foils, back side of board.

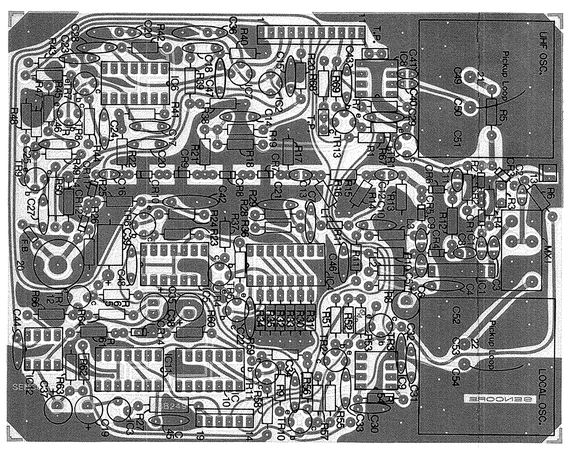

"1800" RF BOARD COMPONENT VIEW

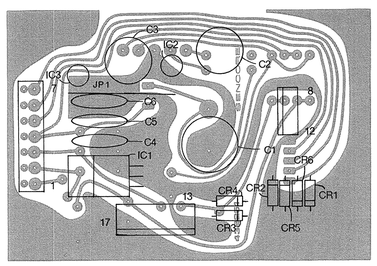

"1900" METER/RINGER POWER SUPPLY BOARD COMPONENT VIEW

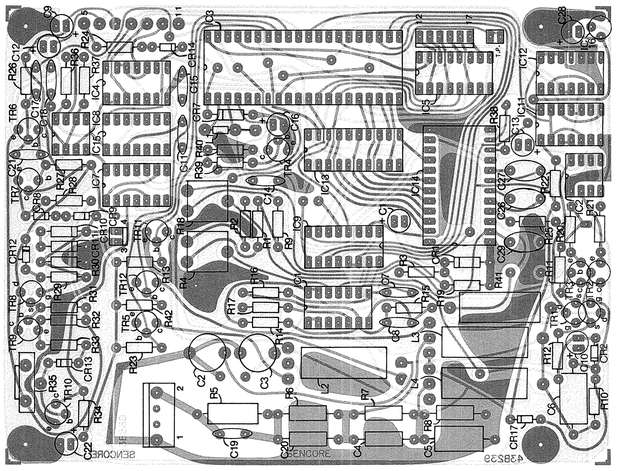

"800" METER/RINGER BOARD COMPONENT VIEW

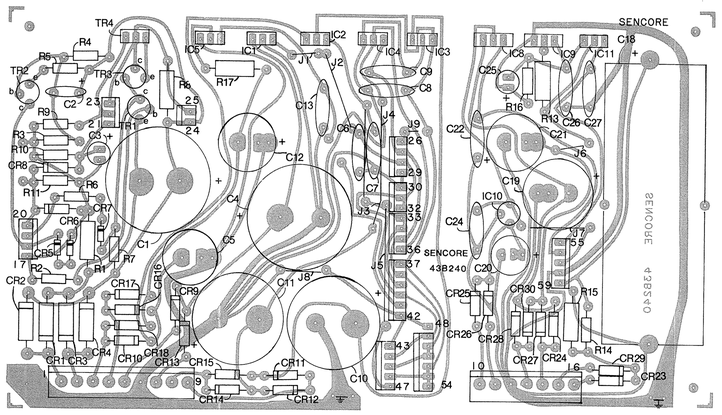

"900" POWER SUPPLY BOARD COMPONENT VIEW

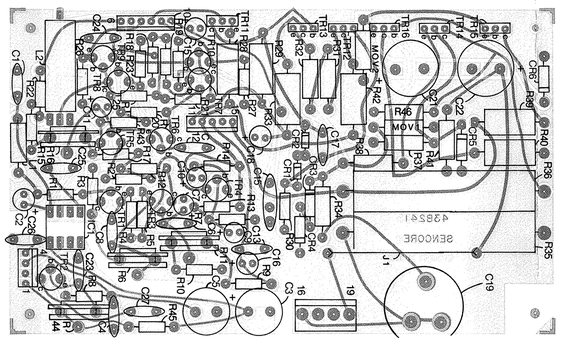

"1000" DRIVE BOARD COMPONENT VIEW

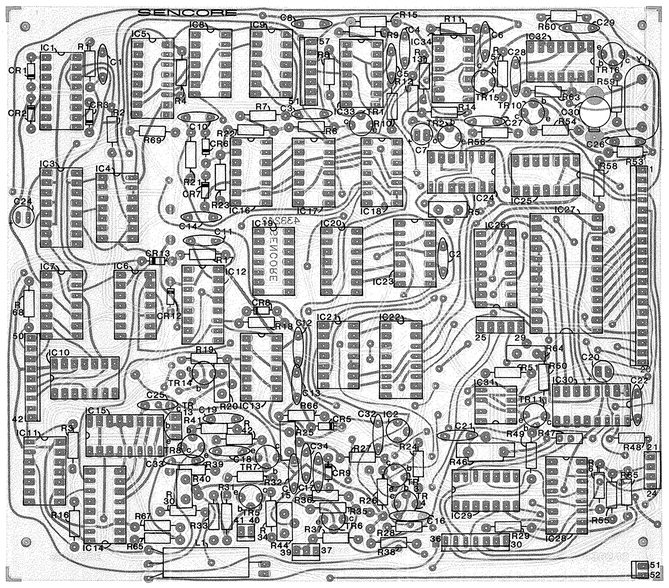

"1100" VIDEO GENERATOR BOARD COMPONENT VIEW

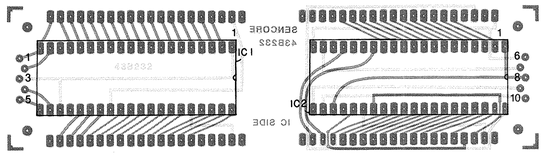

"100" LCD DISPLAY BOARD COMPONENT VIEW

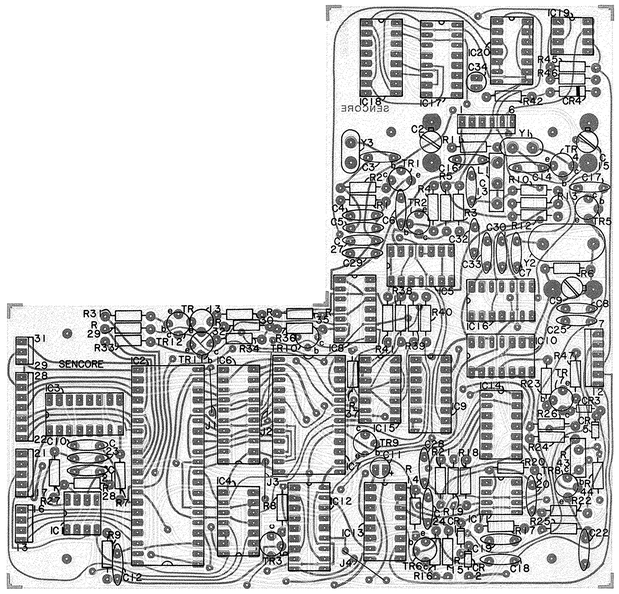

"200" P.L.L. BOARD COMPONENT VIEW

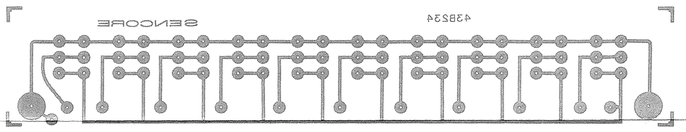

"300" 10 BAR INTERRUPT BOARD COMPONENT VIEW

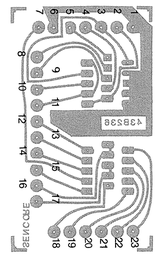

"500" RF-IF SELECT BOARD COMPONENT VIEW

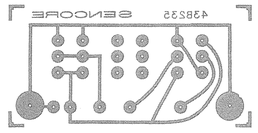

"400" INTERLACE/VIR BOARD COMPONENT VIEW

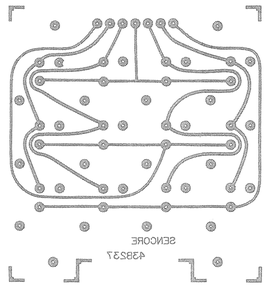

"600" KEYBOARD COMPONENT VIEW

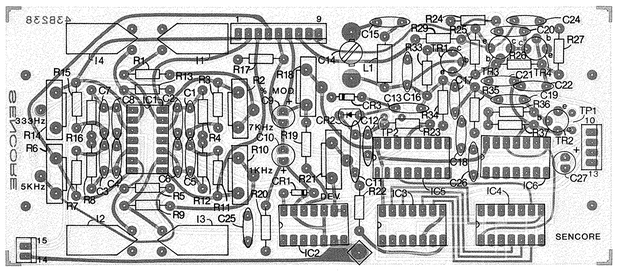

"700" AUDIO/4.5 MHz BOARD COMPONENT VIEW

Form 2193

This sheet includes PC board layouts.

SHEET 7

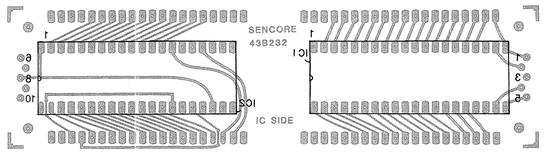

"100" LCD DISPLAY BOARD FOIL VIEW

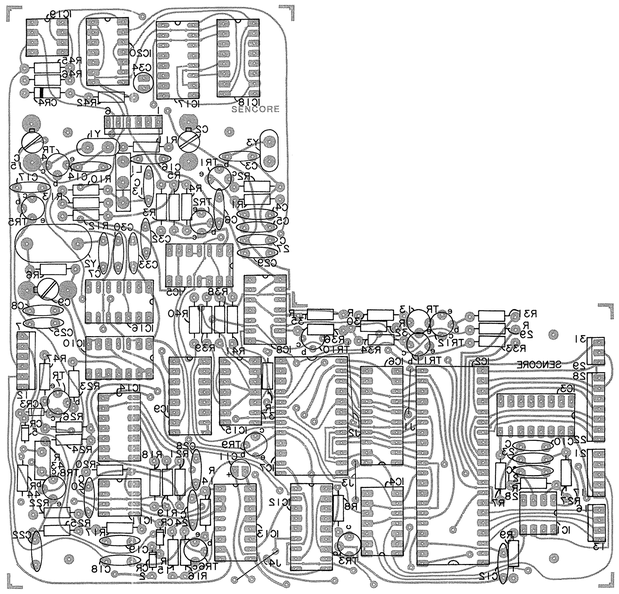

"200" P.L.L. BOARD FOIL VIEW

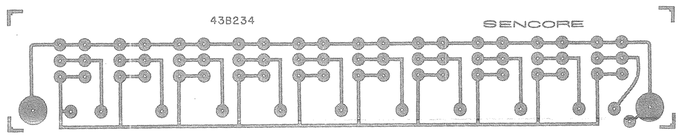

"300" 10 BAR INTERRUPT BOARD FOIL VIEW

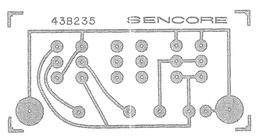

"400" INTERLACE/VIR BOARD FOIL VIEW

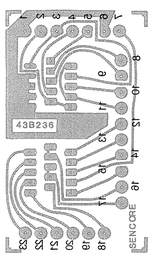

"500" RF-IF SELECT BOARD FOIL VIEW

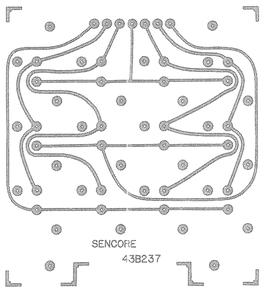

"600" KEYBOARD FOIL VIEW

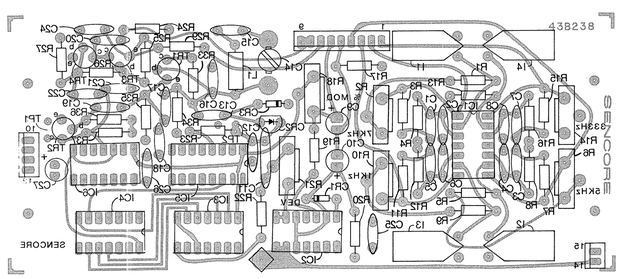

"700" AUDIO/4.5 MHz BOARD FOIL VIEW

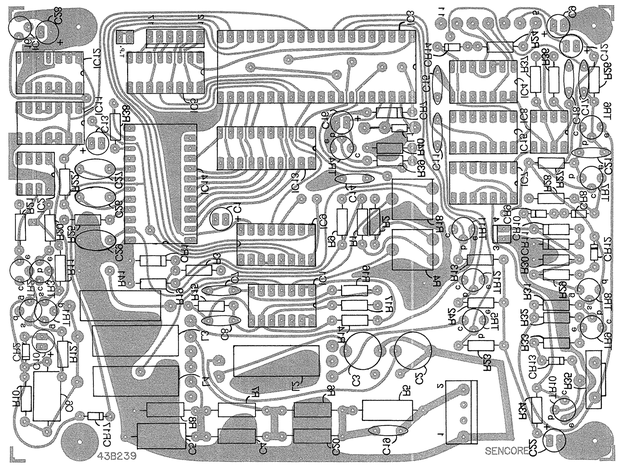

"800" METER/RINGER BOARD FOIL VIEW

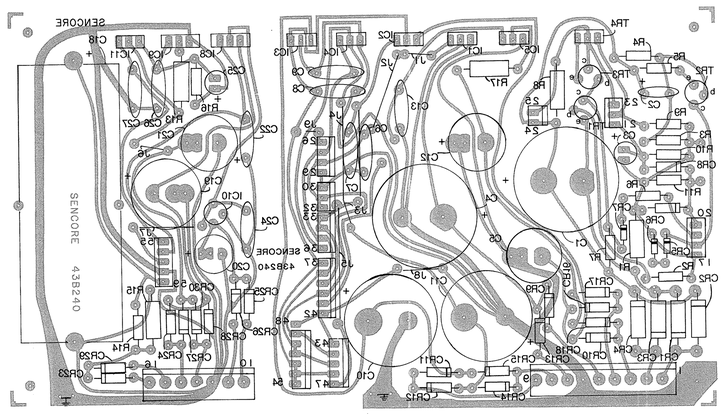

"900" POWER SUPPLY BOARD FOIL VIEW

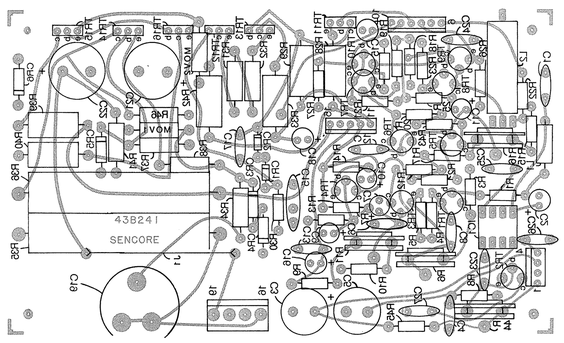

"1000" DRIVE BOARD FOIL VIEW

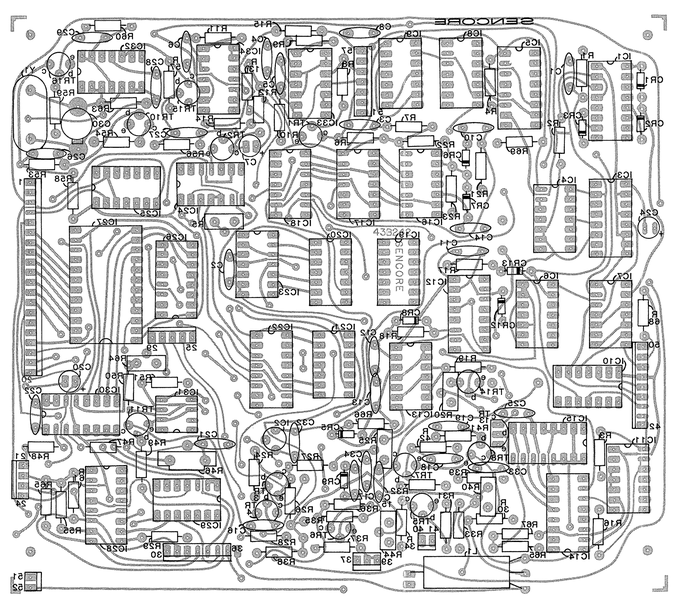

"1100" VIDEO GENERATOR BOARD FOIL VIEW

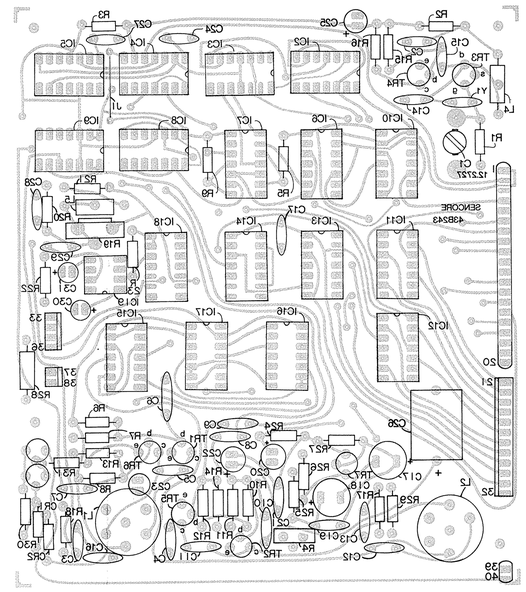

"1200" .5 MHz GENERATOR BOARD FOIL VIEW

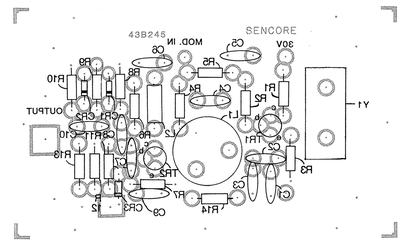

"1400" 45.75 MHz OSCILLATOR BOARD FOIL VIEW

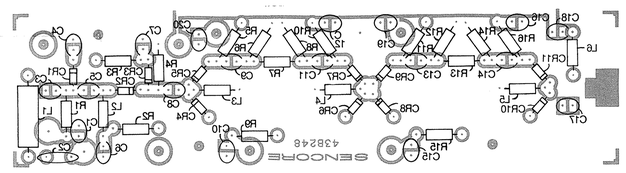

"1700" ATTENUATOR BOARD FOIL VIEW

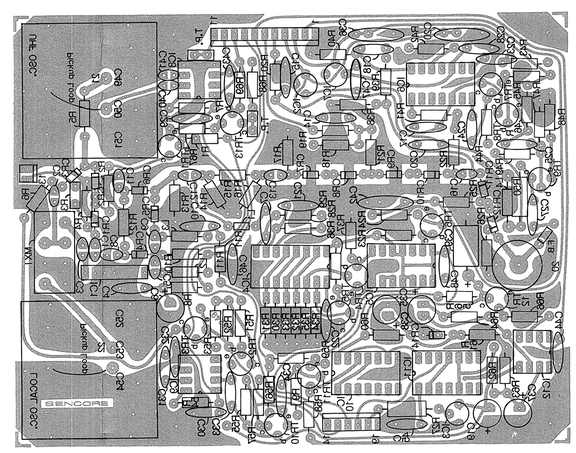

"1800" RF BOARD FOIL VIEW

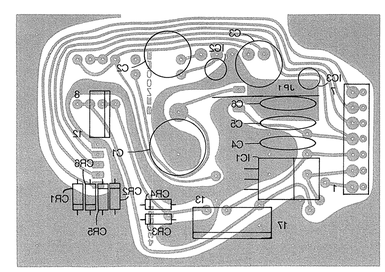

"1900" METER/RINGER POWER SUPPLY BOARD FOIL VIEW

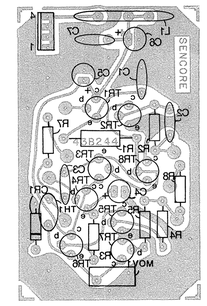

"1300" 30 Hz/3.58 MHz BOARD FOIL VIEW

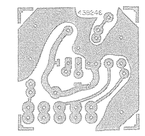

"1500" 512 MHz OSCILLATOR BOARD FOIL VIEW

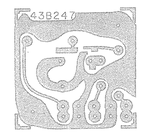

"1600" UHF OSCILLATOR BOARD FOIL VIEW

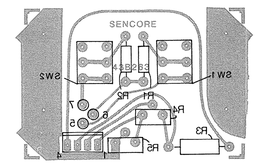

"2000" CHANNEL UP/DOWN BOARD FOIL VIEW

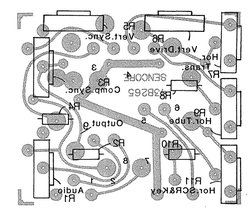

"2100" DRIVE SWITCH BOARD FOIL VIEW